
disano
illuminazione
FOR A MORE SUSTAINABLE WORLD

Disano LED Catalogue

Disano aspires to become the number one **reference in the lighting industry**, not only for the **quality of its products**, but also for its commitment to creating a **positive social footprint.**

We are aware of the **importance and value of preserving the environment** and promoting the **health and well-being of our employees** and the communities affected by our activities, **contributing to society in a constructive way while** inspiring and encouraging others to do the same.

By following the sustainable development goals defined by the United Nations in 2015 as part of the **2030 Agenda**, Disano intends to provide its contribution in the following areas::

Environment



Business Ethics & Social Responsibility



Health & Safety



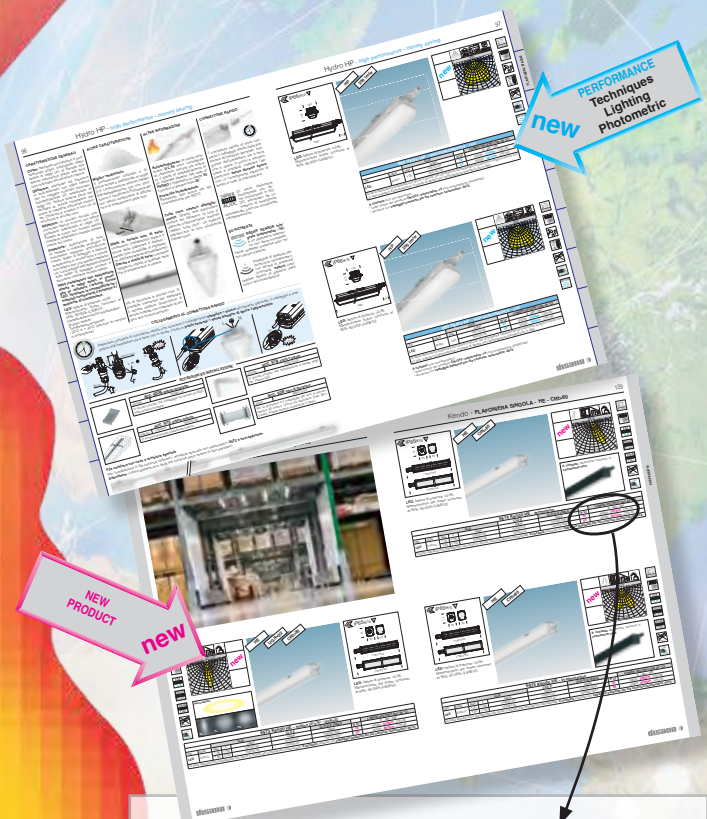

	LED (tj= 85 °C)
W	K - ølm 900mA - CRI
975	4000K - 170000lm - CRI 70
	5700K - 170000lm - CRI 70
	5700K - 160000lm - CRI>80

NOMINAL LUMINOUS FLUX AND POWER

In some cases Disano uses and reports the values provided by manufacturers regarding the LED's **nominal luminous flux** (Ta=25°C) with a tolerance of ± 10% compared to the reported value. The **W** column indicates the **nominal power** of the LED module. The values indicated in the relevant column regarding the LED module refer to a specific temperature: For the LED CHIP the reference is "**tj**", and for the COB LED the reference is "**tp**".

	LUMEN OUTPUT (tq= 25 °C)
W tot	K - ølm - CRI
35	4000K - **5875lm** - CRI>80
50	4000K - **8413lm** - CRI>80

OUTPUT LUMINOUS FLUX AND POWER

The **luminous flux emitted** by the light source stated by **Disano** in its catalogues may show a tolerance of ± 10% with reference to the reported values. The **W tot** column (except for the emergency versions, of which values are to be provided upon request) indicates the total wattage absorbed by the entire system (LED + driver) and will not exceed 10% of the reported value. The values reported in the relevant column refer to the luminaire's ambient temperature "**tq**".



LED Panel p. 4



Creta p. 8



Rodi p. 10



Comfortsquare p. 18



Minicomfort p. 26



Ibis p. 32
Heron p. 34
Supercomfort p. 36



Compact Dark p. 38
Compact p. 40
Compact IP65 p. 42



Health Dark p. 44
Health p. 48

HYDRO

ECHO



Ottima p. 88



Thema p. 90



high performance p. 94
FS p. 95
ICE/HT p. 95



high performance p. 96



STYLE p. 98



energy saving p. 102
3000K/6500K p. 103



parking p. 104
high performance p. 105



high efficiency p. 106
FS p. 107



Kendo HE p. 126



Kendo HE p. 130



Techno System 2.0 p. 138

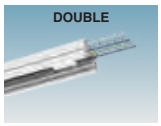

Power track p. 140



Techno System p. 144

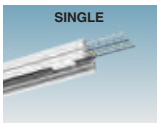

Power track p. 150



Rapid System p. 156

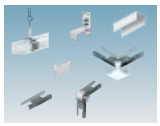

acc. p. 158



Cripto micro p. 198
Cripto small p. 200
Cripto medium p. 202
Cripto big p. 204



Litio 2.0 small p. 211
Litio 2.0 medium p. 212
Litio 2.0 big p. 216



Micro Rodio p. 220
Mini Rodio p. 222
Rodio p. 226



Mini Cromo p. 242



Cromo p. 250



Saturno p. 258



Astro p. 260

1/2 MODULES



Radon p. 262



Tower p. 320
Expo p. 322



Portofino p. 324

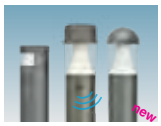

Faro p. 332



Bitta p. 338
Amalfi p. 340
Globo p. 341

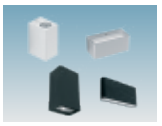

Square p. 342
Upright p. 344
Plane p. 345
Brick p. 346



Horizontal p. 348
Swinging p. 349
Musa p. 350
Clessidra p. 351

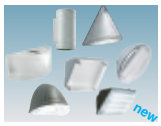

Cilindro / Meridiana p. 352
Vega p. 353
New Vega p. 354
Green / Garden p. 355



Rugby p. 356
Cometa p. 357

Vista 2.0 p. 400

Mini Ischia p. 406
Ischia p. 408

Iseo p. 418

Como p. 426
Garda p. 430

Loto p. 440

Braies p. 446

Torpedo 2.0 p. 450
Visconti 2.0 p. 458

Volo p. 466

Mini Giovi p. 508

Giovi p. 520

Sella 1 p. 530

Sella 2 p. 538

Fibreglass

p. 576

Fluted

Ø 100 p. 578

Fluted

Ø 120 p. 580

Cone-Shaped p. 582

Urban p. 584

Steel

Ø 102 p. 586

Steel

Ø 102 - 159 p. 588

Steel

Ø 120 - 159 p. 590

LED 2026

INTERIORS



Comfort Panel p. 49
Ermetica p. 50



Parigi p. 52
Madrid p. 54



Disanlens p. 62
Channel p. 68



Nikos p. 70
Luna p. 72



Oblò 2.0 p. 74
Oblò J 2.0 p. 76
Compact 2.0 p. 78
Globo 2.0 p. 79



Globo p. 80
Riquadro p. 80
Cubo/Orma/Rigo p. 81



Safety 2.0 p. 82
Safety 3.0 p. 83
Safety Round/Square p. 84
Safety Flag p. 85

WATER-PROOF



radar sensor p. 108
for LED tubes p. 110



Malta p. 111



Dorno p. 112



Forma p. 114



Echo p. 119
Forma p. 120

Astro Q Mini p. 121



See chapter
Horticolture

SUSPENSION



Astro Q Micro p. 160



Astro Q Mini p. 170



Astro Q p. 176



Quasar p. 182



Saturno p. 186



Quark p. 190



Argon p. 192
Ghost p. 193

FLOODLIGHTS





Forum 1 p. 272



Forum 2 p. 280



Forum 3 p. 288



Forum 2.0 p. 296



Forum 2.0 p. 304



Sicura p. 312
Tunnel LED p. 316

RESIDENTIAL AMENITIES



Koala Big p. 358
Koala p. 359
Square p. 360



Podio p. 362
Elfo p. 366
Dafne p. 370

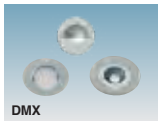

Starled p. 371
Microfloor p. 372
Midifloor p. 376

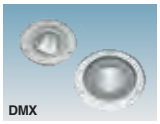

Minifloor p. 377
Floor p. 378

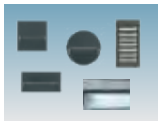

Pocket p. 382
Box p. 388



Starled p. 392
Spy p. 393

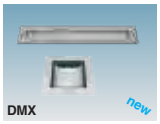

Sicura p. 394
Miniquadro p. 396

AMENITIES FIXTURES



Granada p. 472



Lucerna p. 476

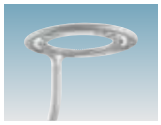

Aura p. 488



Disco p. 490



Torcia p. 494
Vista p. 496



Polar p. 498
Clima p. 499

Iseo p. 500
Saturno p. 502
Campana p. 504

STREET LIGHTING

Mini Stelvio p. 544

Stelvio p. 548

Rolle 2.0 p. 552

Denia p. 556

Susa p. 568

Resia p. 572

POLES

Steel

Ø 120 p. 592

Liberty p. 594

Virgola p. 596

Sector p. 598

Oliva p. 599

Acc. for street lighting p. 600

Performance Features

p. 601

LIGHTING MANAGEMENT SYSTEMS

INDOOR LIGHTING SOLUTIONS

ELEMENTARY SOLUTION | MEDIUM SOLUTION | ADVANCED SOLUTION | SMART (IoT) SOLUTION

OUTDOOR LIGHTING SOLUTIONS

ELEMENTARY SOLUTION | SMART SOLUTION | SMART (IoT) SOLUTION | SPORTING SOLUTION

DMX

DMX SOLUTION

p. 614

From page 602 to page 613 - For more information see www.disano.it

EM System p. 624
Horticulture p. 626
UV p. 630
Regulations p. 636
Index p. 640
Info p. 672

We respect the planet

Vision
Disano's corporate philosophy is the same that has contributed to the success of **Made-in-Italy** brands in the world, namely top-quality products, excellent reliability, and utmost attention to customer relations. Disano believes that the new light-based technologies are particularly important to foster a form of development that is closer to the health of the planet and the wellbeing of its inhabitants. It considers smart lighting and human centric lighting as major opportunities for the lighting industry.

Mission
Disano's mission is to provide the market with the widest possible range of products that incorporate latest technology and top-notch design and manufacturing quality. To achieve this goal, it uses the best materials available and pays close attention to every detail of the product's development cycle. The company assists clients using its own team of consultants through the development of complex projects to favour the best application of its lighting fixtures.

Plant the planet
Planting new plants and taking care of them means taking care of our future. Simple everyday gestures that, one day, Mother Nature will give back with the same care and dedication. Disano's products were made with an eye towards environmental sustainability because it understands that protecting the planet is important for all of us.

Lighting technology goes green
Disano's products fully meet current industry demands, increasingly geared towards long-lasting energy-efficiency and smart lighting control systems. Disano offers one of the most complete and constantly updated ranges of LED lighting fixtures currently on the market.

Greener cities begin with eco-friendly lighting
Cities strive for a sustainable future. The desire for more liveable urban spaces with no energy waste and a minimum impact on the environment is a growing interest everywhere, from large cities to small towns. The installation of more efficient lights that can be managed with the new technologies is the first step to building a greener city.new technologies is the first step towards a greener city.

Smart lighting - an ecological choice
The digital revolution has changed the way we move around in our cities. Streets are safer and more sustainable with smarter lighting systems, which reduce consumption and improve performance, delivering light only where and when needed. Smart lighting systems can be dimmed at different times to prevent waste. They can be controlled remotely, warning about failures along the line. The new lighting technology is conceived to protect the environment and to manage, supervise and develop smart city projects.

Sport for all with eco-friendly lights
High-quality lighting is a fundamental requirement even for small sport facilities, where sport means health and fun for all, not only professional athletes. The system must be energy-efficient and comply with regulations. Moreover, lights must be addressed to prevent glare on the play field and dispersions in the surrounding environment. With extraordinary results in indoor and outdoor systems, Disano's light fixtures are always the right choice to enjoy sports of any type and level.

Comfort and safety for drivers
The importance of infrastructure for transportation and the community has been increasingly recognised as amazing hubs of attraction with their places for shopping, culture and entertainment. Lighting must therefore meet all these different aesthetic and functional needs. The great variety of Disano's fixtures makes infrastructure lighting systems more functional, safer and practical.

Highlighting beauty while respecting the surroundings
Illuminating artistic and cultural heritage is a delicate task. Light must respect the environment and the natural colours of materials, while blending seamlessly into the landscape which is an integral part of the architectural or artistic setting. Today, it is possible to achieve extraordinary results with a new generation of spotlights, featuring reduced dimensions and LED sources that do not damage the artwork, while saving energy.

Clean and planet-friendly agriculture
Farming with LED lights means reducing soil consumption and saving water resources, and it does not need the use of pesticides. According to research on the luminous spectrum, LED lights can be used efficiently to boost plant growth without altering its biological characteristics. This is a new type of agriculture that can meet the future challenges in resource availability, food security and health.



Environmental policy

Disano has been constantly working on reducing the impact of its business on the environment by monitoring progress, setting goals and creating action plans for improvement.

We have recently installed solar panels at our headquarters in Milan, Italy. We are now not only decreasing our consumption, we are also generating 209.116 MWh/year, covering 58% of the energy we need while reducing CO2 emissions by 101 tonnes annually. And all this is thanks to the 311 PV solar panels installed on the roof of the building.

We have implemented an Environmental Management System (UNI EN ISO 14001 - 14002-). We have obtained ISO 50001 certification to demonstrate the Efficiency of our Energy Management System.

We use recycled materials to manufacture our products, helping to reduce our impact on the environment.

We have implemented a Suppliers' Code of Ethics to help us recruit only suppliers who are updated on the best practices in terms of their environmental impact and the efficient consumption of resources.

We use recycled materials for our packaging.

We are actively engaged in reducing greenhouse gas emissions by adopting sustainable practices and technology to contribute to the fight against climate change.

We have been awarded BRONZE rating by ECOVADIS, a globally recognised assessment platform that rates businesses' sustainability.

Ethics & Social Responsibility, Health & Safety

Disano develops working relationships based on loyalty, honesty, fairness and mutual collaboration.
We provide equal opportunities without any discrimination to all employees and candidates.
We give occupational health and safety the highest priority in all our activities.

We operate in accordance with the Italian Model 231/2001, which consists of a set of protocols to promote a corporate culture based on ethics, respect, transparency and compliance with privacy regulations.

We have a Code of Ethics to guarantee fair treatment for all employees without discrimination, protecting their needs and rights.

We adopt recruitment procedures that ensure an impartial selection of the most suitable candidates.

We implement risk assessment activities. We use personal protective equipment. We ensure compliance with occupational safety regulations and have maintenance plans for machinery, equipment and tools. Finally, we invest in employee training to ensure attention and sensibility.

We have an occupational health and safety management system in compliance with ISO 45001.

Disano has set ambitious goals for the future, such as:

Analysing the life span of the most important product families using an internationally recognised and approved method for accurately measuring the impact of our products on the environment.

Implementing an effective differentiated waste collection system.

Continuing to reduce paper usage.

Improving energy efficiency and extending the usable life of our products.

Obtaining ISO 50001 certification to prove the efficiency of our energy management system.

Whether it's for indoor or outdoor areas, public or private offices, commercial or industrial spaces, Disano offers a **WIDE RANGE OF LIGHTING MANAGEMENT SOLUTIONS** that can help increase energy savings, visual comfort and safety.

INDOOR LIGHTING SOLUTIONS

ELEMENTARY SOLUTION

PLUG & PLAY systems with on-board sensors:

ON/OFF



- Solution with built-in sensors
- Sensors attached to the lighting body and visible
- Programming via app or remote control of sensors or trimmers
- "PLUG&PLAY" no installation difference with a non-dimmable product
- The installer and the user do not require specific skills because the lighting fixture is configured to change lighting levels automatically

DIMM 0/10V



- No additional cabling
- No centralized controls
- No programming and commissioning from specialized technicians
- No remote communication

DIMM DALI



MEDIUM SOLUTION

CABLED solutions for DALI dimmable fixtures:

PUSH DIMM



- The lighting fixture is equipped with a DALI PUSH DIM LED driver
- Simple additional cabling and possibility to use a standard NO switch

PRESENCE SENSOR



PRESENCE SENSOR



HIGH CEILINGS

ADVANCED SOLUTION

High-tech WIRELESS solutions to be managed via app:

BASIC DIM



DISMART 2.0



- System equipped with smart sensors with high level of automation
- Easy-to-use app and software that do not require skills from specialists (e.g. DALI commissioning or software engineer)
- Built-in or external sensors and, if requested, additional cabling that does not require complex circuitry

SMART (IoT) SOLUTION

COMPLEX solutions requiring lighting management hardware and software:

ZHAGA SOCKET



SMART solution:
- Wired and wireless solutions
- System with all fixtures and sensors are managed with the BUS link (or over the air) with the possibility of a limited, but extremely simple, management
- Possibility to configure via app/smartphone/tablet
- Suitable for medium-small systems: variable complexity, including situations that may require the intervention of specialized workers
- Scalable

WIRELESS (IoT)



IoT solution:
- Device complete with smart technology and hardware infrastructure with software for remote control

For more information see chapter *Lighting management systems and recommendations*

Disano illuminazione offers a wide range of solutions that meet the design requirements of both simple and complex installations which include the concepts of **Smart Building** and **Smart City**, as well as **IoT infrastructure** where data are monitored and the system is analyzed to increase energy savings through personalized control strategies, which can be reconfigured endlessly to enable our lighting fixtures to interface with Building Automation IoT systems.
Simple access and usage are crucial for making the technology available to everyone through smartphones and tablets.

OUTDOOR LIGHTING SOLUTIONS

ELEMENTARY SOLUTION

Programmable luminaires:

DRIVER PROG - Virtual midnight - systems with 0/10V on-board sensors





The luminaire is equipped with a smart LED driver

- Prog (CLD PROG wiring): luminaires developed to grant great flexibility of use thanks to the possibility to vary luminous flux intensity by changing the LED drive current.
- Virtual Midnight with sub-code -30: lights can be dimmed in 4 steps (up to 8 steps upon request)
- Fixtures with sub-code -1219: lighting fixture complete with stand-alone motion sensor with 0/10V control.

SMART SOLUTION

COMPLEX solutions requiring lighting management hardware and software:

NEMA SOCKET - ZHAGA SOCKET



PHOTOCELL and LIGHTING-MOTION SENSOR



WIRELESS ANTENNAS WITH REMOTE CONTROL



The lighting fixture is designed to accept NEMA/ZHAGA socket
- Option to install sensors and remote control at a later time by using the fixture's socket
- No additional cabling is required
- External installation of fixture, no EMC issues

SMART (IoT) SOLUTION

COMPLEX solutions requiring lighting management hardware and software:

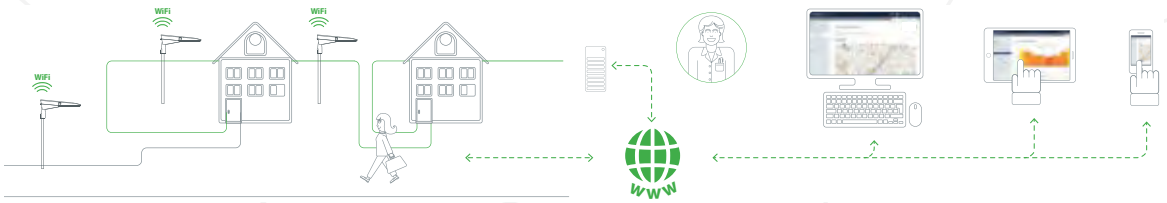

- Device complete with smart technology and hardware infrastructure with software for remote control

SPORTING SOLUTION

COMPLEX solutions requiring lighting management hardware and software:

BASIC WIRELESS



ADVANCE WIRELESS



DMX TOP SOLUTION



- Small and medium-sized sports facilities
- Large-sized sports facilities (stadiums/sport centres/campuses)

For more information see chapter *Lighting management systems and recommendations*

...from 1957...

Disano illuminazione S.p.A., founded in 1957, located in rozzano (milan), Has a total production area of 15,000 sqm.
The factory is located in Dorno (PV) and covers a floor surface of 100,196 sqm. This area includes the logistics department and the automatic warehouse (16,396 sqm), with an overall capacity of 22,500 pallets.

"DISANO" is a leading manufacturer of lighting fixtures, covering all the main market areas:
- Commercial service sector (ceiling fixtures, recessed fixtres for false ceilings, integrated modular systems)
- Industrial applications (watertight fixtures and high bays)
- Outdoor applications (lawn fixtures, urban decora-tion compositions, floodlights for lighting large areas, and street lanterns).







Disano Group


FOSNOVA


ILUMINACION DISANO


DISANO FRANCE





FOSNOVA S.r.l., located in Rozzano (Milan), near the Disano S.p.A. plant, boasts decade long expertise in architectural lighting design. Currently, Fosnova's production specializes mostly in fixtures utilising the most recently developed light sources. The Fosnova product range offers a variety of solutions to indoor lighting problems, including: downlights and spotlights , interior floodlights , free standing, wall and ceiling mounted fixtures, fluorescent light modular systems, electrified tracks.

France-based **DISANO FRANCE** s.a., established in 1993, equipped with a warehouse and customer support offices, is responsible for distributing the Group's products in the French territory.

Spain-based **ILUMINACION DISANO** s.a., established in 1992, is now located in new headquarters situated in Roda de Barà (Tarragona), and is responsible for distributing the Group's products in the Spanish territory. Additionally, Iluminación Disano has a productive area of approximately 11,850 sqm totally covered, equipped with advanced systems and highly automated. Iluminacion Disano's logistics operate on a fully automated area, with an overall capacity of 6360 pallets.

DISANO is also present in **PORTUGAL, IRELAND, BELGIUM, CZECH REPUBLIC, SLOVAKIA, POLAND, SLOVENIA, CROATIA, BOSNIA AND HERZEGOVINA, HUNGARY, MONTENEGRO, SERBIA, MIDDLE EAST, RUSSIA, AFRICA and LATIN AMERICA** with its own technical support and sales offices.

Quality certification

The Disano Group considers service to the market and continuity in relations with customers as key elements in company policy in which it has continuously invested in Italy and Europe. Improvements in manufacturing technology, excellent innovation, rigorous controls throughout the entire corporate process system, high product quality control standards, as well as the development of advanced computer systems for lighting design calculations. The photometric measurements certified by the CSQ mark are entirely conducted in our research laboratories, in compliance with the European Lighting Design Committee's guidelines.
For DISANO Illuminazione, **Quality System Certification** in compliance with **ISO 9001:2015** standard (design, production and sale of lighting fixtures and accessories) is an further step towards improvement of the company processes aimed at achieving customer satisfaction.
An Environmental Policy is the framework of the values and principles that guide a company's commitment in environmental protection; to this end, it implements an Environmental Management System compliant with the requirements of **ISO 14001-14002-2**. We have an occupational health and safety management system in compliance with **ISO 45001**. Disano illuminazione has chosen to allocate organizational, instrumental, and financial resources to pursue the goals of enhancing the optimization and effectiveness of energy usage. As a result, the company is dedicated to aligning its energy consumption with its actual needs, thereby implementing an Energy Management System that complies with the **ISO 50001** standard.
We have been awarded **BRONZE** rating by **ECOVADIS**, a globally recognised assessment platform that rates businesses' sustainability. Disano illuminazione is making efforts to pursue the constant improvement of its environmental performance in order to reduce and prevent pollution by identifying the environmental issues and impacts (both direct and indirect) associated with its business.



Production



On a surface area of 66.645 sqm, production is highly automated and ensures high quality standard in terms of reliability and long product life.

PLASTIC MATERIALS AND METALS
The unit is equipped with injection moulding machines (up to 2500 tons each), extrusion machines, equipment to make sheet metals and profiles also used for electrified tracks.

MACHINING OF SHEET METALS AND OPTICAL SYSTEMS
Computer controlled, high-precision manufacturing tools include mechanical and hydraulic presses; all systems are specially designed for controlled quality production and competitive pricing.



PAINTING PLANT
All Disano lighting products have double coated surfaces. The double coating process is fundamental to ensure that fixtures exposed to aggressive outdoor agents are able to withstand such conditions as high pollution rates, salty environments or extreme weather conditions. Our surface coating department is able to meet the highest quality and environmentally friendly standards. Each luminaire undergoes special preparation and our plant is equipped with an air purifier capable of meeting latest anti-pollution standards.



The coating cycle is made up of the following stages:
• before being coated, each piece undergoes chemical treatments to allow a firm fixation of the coating onto the surface.

- **STANDARD POWDER COATING**: the fully automated powder-coating cycle involves a polyester-based, salt-spray corrosion-resistant and UV-stabilised paint.

- **MARINE ENVIRONMENTS AND MARINE-GRADE POWDER COATING:** the coating process for products intended for marine environments (recommended for installations within 5 km of the sea) involves a pre-treatment of the metal surface, which is followed by an initial cataphoresis stage and then a polyester powder coating (for a total of two coats of paint).

MANUFACTURING/PRODUCTION OFFICES
The offices in charge of production and shipping are located close to the factory. Arranged on several levels, they cover a surface area of approximately 2,660 sqm. The covered car park extends on a floor surface of 1,450 sqm.

Laboratories

Underwriters Laboratories

The Disano illuminazione laboratories perform photometric analysis with third-party reviewers of UL International Italia and are authorized to conduct the following tests:

UNI EN 13032-1:2012
Measurement and presentation of photometric data of lamps and luminaire, Part: 1 Measurement and file format.
UNI EN 13032-4:2015
Measurement and presentation of photometric data of lamps and luminaires, Part: 4 LED lamps, modules and luminaires.
IES LM-79-08
Approved method: Electrical and photometric measurement of solid-state lighting products (sec. 9.0, 10.0, 11.0, 12.0, 12.2, 12.5,14.0).



RESEARCH & DEVELOPMENT: FROM THE EXCELLENCE OF OUR LABS TO THE QUALITY AND SAFETY OF OUR LUMINAIRES.
Disano has always privileged investments to equip its laboratories with cutting-edge technologies to promote the ongoing improvement of the production processes and the design of new lighting fittings. The Research and Development sector occupies a central position in the activities engaged in by Disano. In particular, this sector focuses on:
• the design of new lighting fittings
• the search for new lighting solutions,
• experimenting new light sources and materials.
The experimental work on new materials and the experimental testing of the innovations introduced enable the Disano Group to achieve a qualitative standard that ensures an absolute guarantee and a technological level that is always very advanced.

PRODUCT SAFETY LABORATORIES (third-party supervision by IMQ-UL)
At the Disano illuminazione laboratories, which use the same instrumentation employed in the most accredited certifying bodies, all products undergo several tests to measure their efficiency and resistance to use and to weather. Disano illuminazione performs tests under the supervision of two of the most important certifying bodies in Italy: IMQ S.p.A and UL Italia. The company's laboratories, in accordance with the WMT/CTF-Level 2 testing procedure, are authorized to issue the ENEC certification to ensure compliance with the following global lighting standards:
IEC/EN 60598-1 - Luminaires
IEC/EN 60598-2-1 - Fixed general purpose lights
IEC/EN 60598-2-3 - Road and street lights
IEC/EN 60598-2-5 - Floodlights
IEC/EN 60598-2-6 - Lights with built-in transformers
IEC/EN 60598-2-13 - Ground recessed lights
IEC/EN 60598-2-22 - Emergency lights

PRODUCT ELECTROMAGNETIC COMPATIBILITY LABORATORIES (third-party supervision by IMQ-UL)
Moreover, Disano illuminazione laboratories perform electromagnetic compatibility tests on its lighting products in compliance with the following global lighting standards:
IEC/EN 61547 - General lighting EMC immunity with special reference to surges, bursts, voltage dips and short interruptions and electrostatic discharges
IEC/EN 55015 - Limits and methods of measurement
IEC/EN 61000-3-2 - Analysis of harmonic current emissions
IEC 61000-3-3 - Flickering measurement
The company's laboratories also carry out the following tests: chemical tests, physical tests and electrical tests on semi-finished products selected for production, tests on randomly selected samples from semi-finished products, functional tests on randomly selected samples from finished products, accelerated exposure tests of coatings to measure resistance to ultraviolet radiation. In this way, Disano illuminazione can ensure the quality of all of the components used, in compliance with internationally accepted procedures before each finished product is placed on the market.

MEASUREMENTS (third-party supervision by UL)
The adoption of computer aided design technology enables the reflector's optimum configuration to be studied in relation to the distribution of the desired light beam and the determination of the correct ratio between the parabola and the position of the lamp. The experimental tests of the lighting parameters are then performed on the first sample of the parabola using a mirror goniophotometer. The goniophotometer consists of various components, the core feature comprises the photometric tunnel, where the samples are positioned. The following parameters are measured: luminous flux for each spatial angle, temperature, the electric parameters for the power supply are tested and managed using a process computer that enables measurements to be made in accordance with the international standards prescribed by the CIE regulations. The light sources used for the measurements are prepared beforehand in the lamp ageing laboratory that is an integral part of the laboratory facility. A measurement is taken before starting the final production to define the lighting unit's correct photometric curve. The lighting unit's photometric data is recorded and processed by the computer. Samples of finished products as subjected to the lighting quality control process.

Distribution service



DISTRIBUTION SERVICE
Italy: a large 144,000 m3 warehouse for a total of 22,500 pallets has the purpose of optimising the delivery and shipping service to the customers' local warehouses, for a faster response to the end market.
Spain: a fully automated warehouse with an overall capacity of approximately 6360 pallets.
France: Semi-Automatic warehouse for the entire French Market.

SEMI-FINISHED PRODUCT WAREHOUSE
The warehouse covers a surface area of approximately 12,000 sqm. With an overall capacity of 13,650 pallets, and is entirely automated for semi-finished products.

POLE WAREHOUSE
The warehouse where poles are stored develops on a floor surface of approximately 2,100 sqm and is operated in a semi-automatic way.

Customer services

The disano group offers designers, installers and distributors a series of free services that are able to completely satisfy technical, lighting design and commercial needs.

CATALOGUE
The paper catalogues produced by the Disano Group are a consolidated tradition that is repeated every year, not only in Italian, but also in Spanish, French and English.

CONSULTING CENTRE
From the Lighting Technology Consulting Centre, you can request any type of support for the correct use of light fixtures. In fact, the Disano Group guarantees total flexibility in implementing projects using non standard fixtures.The Group's aim is to keep an open-door policy with its customers, and to be at their service at all times.

OUR PROMOTERS
Promoters are present in every region and are at the complete disposal of wholesalers, installers and designers to immediately solve any technical, commercial or lighting design problem and to promote the Disano product nationwide.
They also supply estimates and develop lighting design projects, ensuring continuous support.

MARKETING
The Marketing Department has been set up to assist wholesalers by implementing marketing and promotional support actions at the point of sale, advertising their trademarks to make them become reference point for end users.





A narrative of light on the Web

The Disano Group has created an innovative **WEBSITE**, periodically updated, which provides detailed data and information about the company, its products, representative projects, designs, new products.
Want to browse Disano and Fosnova catalogues easily and quickly, view technical specifications at a glance or retrieve design information with just a few clicks? Now you can thanks to our application for **iPAD AND iPHONE** available in four languages (Italian, English, French and Spanish)!
A close-up of a Disano product against a dark background and the words 'Turn On': this is the homepage that users see when they log into our virtual world. May the journey begin!

What is LED?

LED is the acronym for **LIGHT EMITTING DIODE**, a component that emits monochromatic light with the flow of electric current. LEDs are providing lighting designers with a whole new range of exiting tools to help them achieve the best results and develop creative lighting solutions with amazing effects that were once technically impossible to achieve. A high-quality LED with an **CRI>90** index rated at 3200K - 6500K has also appeared on the market over the last year. The brightness, homogeneity, and colour rendering of LED lights have been improved to the extent that they are now being used for a wide range of lighting applications. **LED** modules consist of a certain number of light emitting diodes mounted on a printed circuit board (rigid and flexible) with active or passive current regulating devices. Optics or light guiding devices can also be added depending on the field of application to obtain different beams and light. The variety of colours, the compact size and the flexibility of the modules ensure a broad range of creative possibilities in many applications.

Photobiological safety

- Crystal layers treated by chemical vapour deposition (wafer)
- A number of layers are then selected based on their luminosity and colour temperature (chip)
- The chip is mounted on a support to dissipate heat and add current continuity to the system (package)
- Lens support
- Protection against external stress
- The rear side of the package emits heat, the front emits light

LEDs: how do they work?

LEDs are semiconductor devices which convert electricity into visible light. When powered (direct polarization), the electrons move through the semiconductor, and some of them fall in a lower energy band. Throughout the process, the energy “saved” is emitted as light.
Technological research has allowed to achieve 200 lm/W for each high voltage LED. The current level of development shows that LED technology has not yet reached its full potential.

Technical specifications

We often read about photobiological safety in lighting design. This very important factor is determined by the amount of radiations emitted by all the sources with a wave length ranging between 200 nm and 3000 nm. Excessive radiation exposure can be harmful for human health. The EN62471 standard classifies light sources into risk groups.



Risk Group 0 (RG0): luminaires are exempt from photobiological risks in compliance with standard EN 62471.



Risk Group 0 (RG0 Ethr): luminaires are exempt from photobiological risks in compliance with standard EN 62471 - IEC/TR 62778. If necessary, contact our customer service for the observation distance.



Risk Group 1 (low risk group): luminaires do not pose any risks due to normal behavioural limitations of a person when exposed to a light source.



Risk Group 2 (intermediate risk group): luminaires do not pose any risks due to people’s aversion response to very bright light sources or due to thermal discomfort.



Environmental advantages

Extremely long working life (100.000 h)

Growing efficiency

Instant switch-on mode

Dimming option with no colour temperature variations

Filter-free direct coloured light emission

Complete colour spectrum

Dynamic colour control mode (DMX, DALI)

Can be switched on also at low temperature rates (-40°C)

Photobiological safety



Advantages for users

A wide range of different colours together with compact and flexible modules enable many creative and innovative design solutions

Reduced maintenance costs

Lower energy consumption, longer working life and reduced maintenance facilitate the creation of interesting applications



General advantages

Mercury-free

No IR or UV components can be found in the visible light spectrum

Reduced use of renewable and non-renewable energy sources

Environment enhancement

No light pollution

Less power installed in each lighting point



Design-related advantages

Wide choice of design solutions

Bright, saturated colours

Vibration resistant lights

Unidirectional light emission (light is shed only upon the desired object or area)

White LED

Several distinctions are made during the production process of the LED lights selected. The chromatic areas called 'bin' are horizontal contours along the BBL line. **Colour uniformity depends on the manufacturer's know-how and quality standards.** A larger selection means higher quality, but also higher costs.

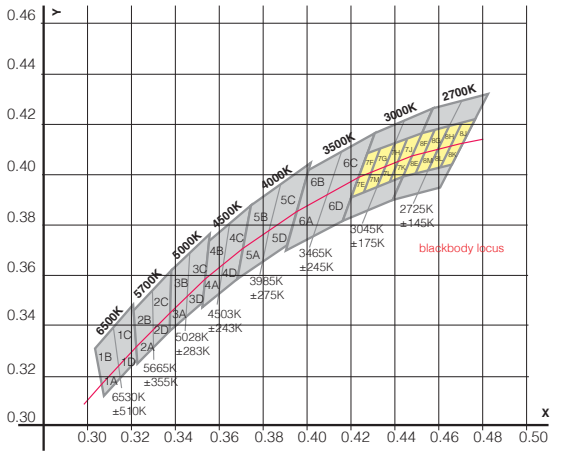

Graphic representation of BINNING: choice of LEDs to use in relation to their colour temperature. Source: Lumileds, 2011.

Cold white

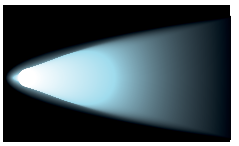

5000K ÷ 7000K - CRI 70

Typical colour temperature: 5600K
Outdoor applications (e.g., parks, gardens)

Natural white

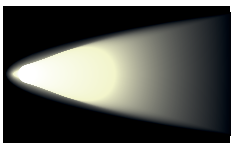

3700K ÷ 4300K - CRI 75

Typical colour temperature: 4100K
Combinations with existing light sources (e.g., shopping centres)

Warm white

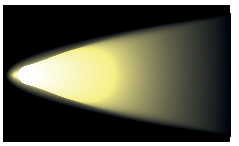

2700K ÷ 3400K - CRI 80

Typical colour temperature: 3200K
For indoor applications, to enhance colours

Amber

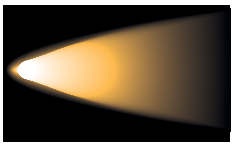

1750K ÷ 2200K

Typical colour temperature: 2200K
Outdoor applications (e.g., parks, gardens, historical centres)

MacAdam Ellipses

Refer to the area on a chromaticity diagram that contains all the colours which are indistinguishable, to the average human eye, from the colour at the centre of an ellipse. The contour of the ellipse represents the just-noticeable difference of chromaticity. MacAdam shows the difference between two light sourcesthrough ellipses, which are described as having 'steps' that indicate the standard deviation of colour. In applications where light sources are visible, this phenomenon should be taken into account because a 3-step ellipse has a lower colour variation than a 5-step.

Size (MacAdam ellipses)	Visibility
1 SDCM	Colour differences are not visible
2 SDCM	Colour differences are visible only with instruments
3 SDCM	Colour differences are hardly visible
4 SDCM	Colour differences are visible
5 SDCM	Colour differences are clearly visible

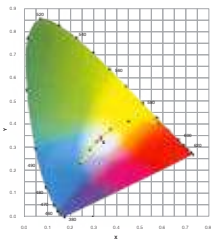

Source:
Standard Chromaticity Region Plotted on the 1931 CIE Curve.

Coloured LEDs

The CIE chromatic diagram is based on the physiological peculiarity of the human eye to assess colours by breaking them down into three fundamental chromatic components (three-colour process): red, blue and green, positioned at the top of the diagram curve. The CIE chromatic diagram can be obtained by calculating x and y for each pure colour. The spectrum colours (or pure colours) can be found on the contour curve, while the colours inside the diagram are real colours. It should be noted that the colour white (and other colours in the central area - achromatic colours or shades of grey) are not pure colours, and can not be associated to a specific wavelength.

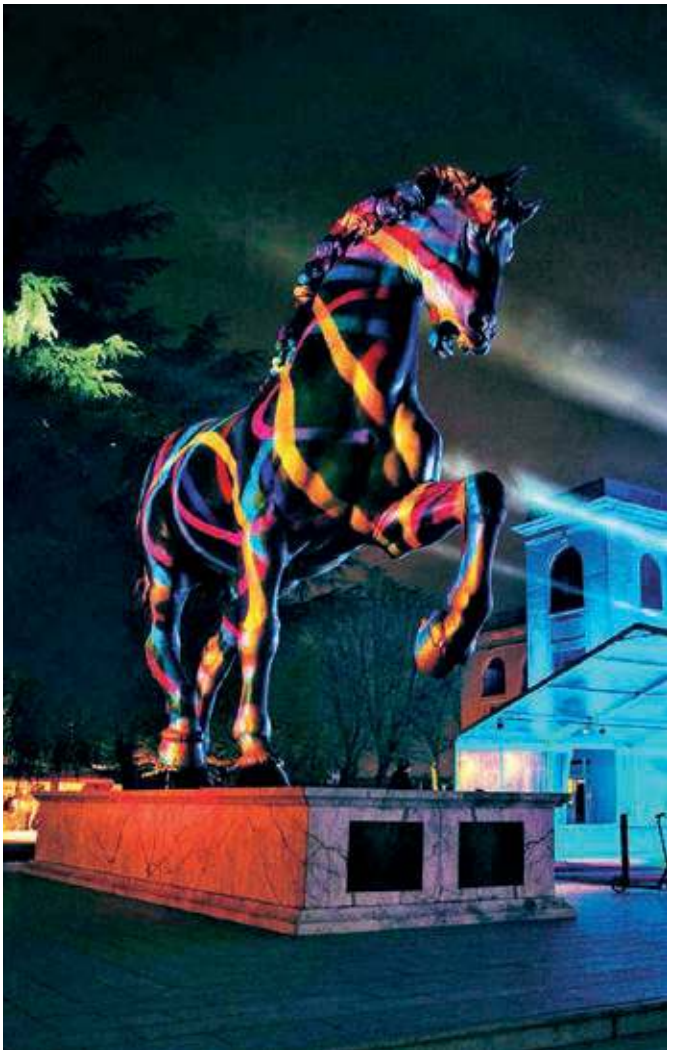

LED and traditional lamps

LEDs have a nominal light output of 150 Lumens and can bring remarkable energy savings compared to conventional sources: Discharge lamps with high colour rendering (Ra>60). They can save up to 30-40% in energy costs. When comparing a LED lighting system with a conventional system we need to take into account the fixture's actual Lm/W ratio rather than the source's initial lumens. The Lm/W ratio of any lighting fixture depends on different factors, such as power loss or power variations due to temperature. In discharge lamps these variations cut by half the initial luminous efficiency (expressed in lumen per watt) of sodium or metal halide sources. The products designed by Disano, instead, minimize losses and operate efficiency even with traditional technology

The wavelength of light (colour) is adjusted using semiconductor materials and different production processes.
Unlike lamps emitting a continuous spectrum, **LED lights emit monochromatic light of one particular colour to guarantee the emission.**

Light sources (colour temperature)	K
Blue sky	12-20.000
Summer daylight (sunshine and sky)	6500
"Daylight" fluorescent tube	6300
White light LEDs	**5600**
Sunlight (midday, summer, mid-latitude)	5400
"Cool white" fluorescent tube	3400
"Warm white" LED	**3250**
100W halogen lamp	3000
"Warm white" fluorescent tube	2950
Amber	2200
Sodium lamp	2100
Sunlight (dawn, dusk)	2000
Candle light	1850-1900

Light sources (colour rendering)	CRI
Sodium lamp	0-25
White light mercury lamp	45
"Warm white" fluorescent tube	55-73
"Cool white" fluorescent tube	65-86
LED	**80**
Metal halide lamps	85-93
100W incandescent lamp	100

Life expectancy

Firstly, it should be noted that LEDs, unlike traditional sources, will not turn off suddenly when their working life ends, but will slowly fade their initial luminous flux until they turn off completely. In fact, LEDs do not break (except for manufacturing damages) but decay gradually and constantly. The decrease of LED flux, normally after 50,000 hrs, is defined by the working life and is represented by the L80 mark (see charts), which means that the flux is kept up to 80% after 50,000 hrs.
The "B" letter followed by a number ranging between 10 and 50 indicates the quality of the fixture and defines the LED percentage that doesn't keep the declared characteristics when it reaches 50,000 working hours.

EXAMPLE: LED declared L80/B10 = 50,000 hrs

This means that when the LED reaches 50,000 hours of operation, 90% (B10) of the LED will have a luminous flux corresponding to 80% of the initial flux (L80)

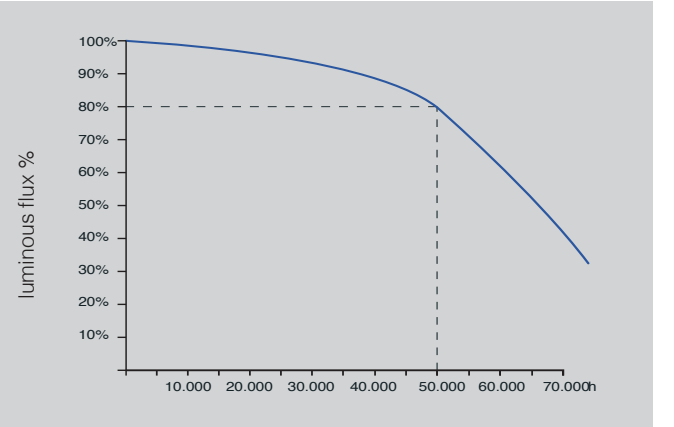

The influence of heat

The working life of LEDs largely depends on their inner temperature.
Any statement about the working life of a LED light is considered reliable after assessing the influence of temperature. Excessive temperature affects the correct functioning of LED lights and reduces their working life.
The values concerning lamp life are regarded as reliable after determining the effect of heat on LED sources. In fact, overheated LEDs are more likely to be affected by malfunction and have a shorter life cycle. Therefore, for LEDs to operate properly, guarantee long life (e.g. 50,000 hrs) and a natural degradation of the luminous flux (e.g. L70), they must be designed to evenly dissipate the heat they produce. The nominal performance of LEDs is respected only if their working temperature is not exceeded (Tj)

Disano is a competent and responsible company that takes these factors into account and measures real values.

Thermal Resistance (C°/W): it indicates the difficulty of LED lights to expel heat, which causes the light sources to deteriorate. TR should be very low to guarantee energy efficiency and durability (LM70). A range of products characterized by even lower values will be launched shortly to guarantee improved light levels and longer working life (at present, a minimum of 50,000 hours in certain conditions).

Luminous flux and power

OUTPUT LUMINOUS FLUX AND POWER
The **luminous flux emitted** by the light source stated by **Disano** in its catalogues may show a tolerance of ± 10% with reference to the reported values.
The **W tot** column (except for the emergency versions, of which values are to be provided upon request) indicates the total wattage absorbed by the entire system (LED + driver) and will not exceed 10% of the reported value.
The values reported in the relevant column refer to the luminaire's ambient temperature "**tq**".
tq = temperature of the environment surrounding the luminaire with reference to a specific performance.

NOMINAL LUMINOUS FLUX AND POWER
In some cases Disano uses and reports the values provided by manufacturers regarding the LED's **nominal luminous flux** (Ta=25°C) with a tolerance of ± 10% compared to the reported value.
The **W** column indicates the **nominal power** of the LED module.
The values indicated in the relevant column regarding the LED module refer to a specific temperature.
For the LED CHIP the reference is "**tj**", and for the COB LED the reference is "**tp**".
tj = temperature of LED's internal junction point.
tp = temperature of the LED module's outer surface

Power supply

Based on the type of LED, they can be powered:
- with a 24V power supply- signalling/semi-power/power LED
- with a 1050mA power supply – power LED
- The latter can be powered with a higher current to increase its luminous flux and power. In this case it is fundamental to ensure that LEDs have excellent air circulation and a good heat sink to dissipate heat.
- the LED power supply has the purpose to maintain and control the exact current circuiting through the circuit; excessive current would damage the LEDs in a few seconds while a weak current would impair performance. -To guarantee constant current, all LEDs of a circuit must be connected in series; if they are connected in parallel (like the one usually used for halogen bulbs) this will deteriorate LEDs very quickly. Power supplies have an isolated output and the maximum input voltage never reaches dangerous levels.

Example:

Power supply	n.LED	W	ølm 4000K - CRI75	ølm 3000K - CRI75
350mA	64	**16**	2838lm	2700lm
	128	**32**	5526lm	5250lm
	192	**48**	8514lm	8088lm
530mA	64	**25**	4177lm	3970lm
	128	**50**	8130lm	7723lm
	192	**75**	12531m	11905lm
700mA	64	**34**	5354lm	5086lm
	128	**68**	10422lm	9900lm
	192	**102**	16062lm	15259lm

LED regulation

The opportunity to check each channel to which LED lights of the same colour are connected enables to obtain a range of colours based on different shades of red, green and blue. Colour emission is regulated using specific dimmer switches. In other words, **these accessories switch the LED lights on and off with a constant frequency and at variable switch-on intervals** (the slowness of the human eye ensures that the on-off mode is integrated and regulated, giving the impression of regulation).

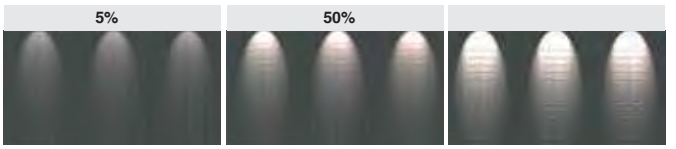

Temperature controller

Our products are equipped with an automatic temperature control device. In the event of an unexpected temperature rise caused by anomalous weather conditions, the system will reduce the drive current or turn off the system as the LED gets warmer, guaranteeing proper operation. Moreover they are equipped with an overvoltage protection device as required by EN 61547.

In short:
- fixtures that are powered at up to 530mA have a smart current limiting device;
- fixtures that are powered at 700mA have an On/Off device.

DRIVERS for dimming LED lights

Owing to the large number of different methods, it is up to the manufacturer of the driver to specify the type of control signal. Even though commonly accepted control standards do not exist, the most popular are:

1-10 V

1-10V (subcode -12): a 1-10 voltage rate is applied to the driver to produce variable light levels, which are proportionate to the light emitted by a LED lamp.

DALI (subcode -0041): digital transmission protocol for sending light levels information to the LED drivers.

Up to 64 DALI fixtures can be controlled with a high degree of flexibility via a 2-wire control line individually, jointly or in up to 16 groups. The lighting is switched on and dimmed via a control line.

BENEFITS:
• Simple planning: no need to assign lighting groups at the planning stage. Instead, they can be set later with the aid of a controller. Control line planning can be separated from power supply planning.
• Simple installation: the control line is protected against polarity reversal and can be routed together with the power supply, for example in a 5-core sheathed cable. The control line must be simply rated for line voltage. There is no need for a special cable.
• Flexible lighting groups for later changes: with DALI, the lighting groups are not hard-wired. The individual luminaires are grouped by simply assigning them to groups with the aid of a controller. These groupings can be changed at any time.
• Synchronous changes of lighting scenes: even if different luminaires are started at different dimmer values or different types of lamp are combined with one another, DALI changes from one lighting scene to another in synchronous mode.

IGBT

IGBT: lamps are turned on and off by a rapid touch; light intensity is regulated by keeping pressure on the pushbuttons.

PUSH DALI

With **PushDALI (subcode -0045)** it is possible to create lighting systems that can be easily switched ON/OFF and dimmed at low costs using conventional mains voltage push-buttons for lighting control. The different switching and dimming functions depend on the fixture's operating status at a given moment and on how long the button is pressed. A short pressure of the button turns the connected drivers ON or OFF; a longer pressure of the button will dim the connected drivers (i.e. the fixture's light level increases or decreases).

BENEFITS:
• Low-cost dimming and switching
• User-friendly operation from multiple lighting control points
• Theoretically unlimited number of driver (we recommend a maximum of 25 driver per button)
• Selectable fade times depending on the driver used
• Dimming levels tailored to human eye sensitivity
• A solution that can be used in combination with ambient light sensors (if any)
• Lighting control signal that corresponds to the mains voltage
• Powerless switching via a lighting control interface



Maximum light stability for visual wellbeing



The primary objective of any interior lighting system is to achieve the best visual comfort adjusted to the needs of the space where light is used. In work spaces, for instance, thanks to new light sources and control systems, the lighting system can establish a relation with natural daylight and therefore create a visually comfortable space during the entire course of the work day, avoiding waste and protecting the health of workers.

Do you want to avoid headaches or eye strain?



Choose fixtures with glare control (**UGR<19 or UGR<16**) for safe and comfortable lighting levels.

Our mind perceives light oscillations at up to 200 Hz.

A long-term exposure to high frequencies (between 70 and 160 Hz) can cause discomfort, headaches, visual fatigue and impaired visual performance.

Classification of UGR values by applications

No or imperceptible glare	UGR≤13
Very demanding applications (technical drawings)	**UGR≤16**
Offices and schools (reading, business meetings, computer work)	**UGR≤19**
Industrial applications, craftsmen	UGR≤22
Transit areas	UGR≤25
High glare	UGR>28

The UGR (unified glare rating) is an international unified measure developed by the CIE (Commission International de l'Eclairage) to assess the direct glare generated by a lighting system.

The European standard regulating the lighting of indoor work places (**UNI-EN 12464-1**) recommends a specific UGR value for different applications ranging between **10 and 30**; **the lower the UGR value, the lower the glare**. The exact value of this index differs by project type because it depends on the position of the luminaires, room characteristics (dimensions, reflections) and on the point of observation of viewers.

Low Flicker

On a chosen selection of fixtures, Disano illuminazione uses **ripple-free** LED switching drivers capable of minimizing flicker. For all Disano spotlights you may find the following mark/pictogram:

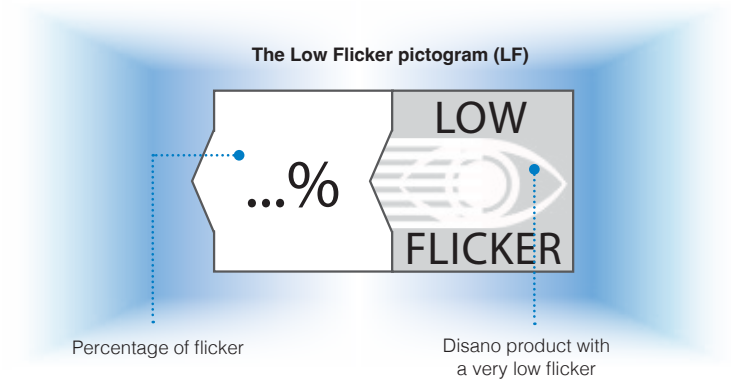

The level of flicker that can be perceived or that is acceptable to human eye may vary. In the presence of a high level of flicker, especially based on perception, optical flicker can generate distress among users and cause a lighting system to be unacceptable from the quality point of view. At present there is no test or verification that can help identify low-flicker optical products. Disano illuminazione, after years of research in the lighting sector, has indentified optimal flicker limits for products that operate at frequencies of ≥400 Hz. With these optimal limits Disano illuminazione can now offer products with proper quality values and be certified with the Low Flicker Mark, allowing easy identification. **The mark is identified with the "Low Flicker" logo that includes a maximum flicker value of 8% at frequencies of ≥400 Hz.**

Flicker is a common issue with LED lamps. It can occur at frequencies below 60 Hz and depends on several factors, such as the ripple emitted by drivers. The notion of flicker-free is very different from that of ripple-free. Ripple is most commonly used by driver manufacturers. Furthermore, "flicker-free" does not mean "without" but rather "very low".

Ripple Free

Ripple free: Quality LED drivers come with a sophisticated multistage circuit to power LED with an ideal current source (one line), without overloads (**Figure 1**). By "ripple" we mean the dimension of the output waveform of a LED driver. Despite the oscillation occurs at frequencies that cannot be perceived by naked eye, evidence shows that the human brain can perceive light oscillations up to 200 Hz (in LED drivers with ripple, this frequency is 100 Hz). Possible problems include headaches, eye strain, distorted vision and, in some cases, even epileptic seizures. Figure 2 shows the greatest impact on LED life at high temperatures: the LED appears to be overpowered in zone "A" and underpowered in zone "B".

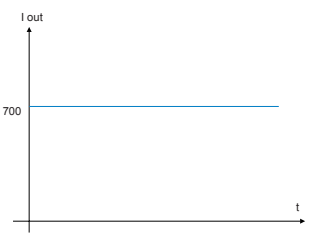

Figure 1. LED powered with ideal current

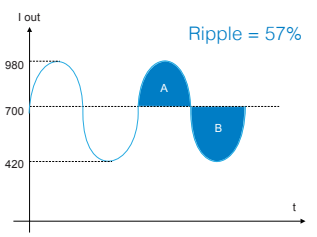

Figure 2. A: LED overpowered, B: LED underpowered

Figure 2: in the absence of a suitable heat sink, the excess temperature of area "A" is not balanced by zone "B", with the result that the LED junction temperature will be higher than the temperature of a RIPPLE-FREE product.

Flicker and video coverage

Light with no glare
Lighting must meet the needs of international events in terms of efficiency and high-definition TV broadcasting, which require high levels of luminance, light uniformity, excellent colour rendering and greater attention the visual comfort of spectators and athletes with a light without glare.



Need more stable images and videos?
Luminous flux oscillations have clear impacts on monitors where images may appear fuzzy or blurry. Therefore, light stability is a key requirement for obtaining high quality videos. It is important to consider that light oscillations provoke effects during video broadcasting, where images appear crossed by numerous black lines, making watching impossible. In addition to this, high current oscillations have a negative effect on LEDs, on the driver life and on the efficiency of the entire lighting system.

Guidelines for TV broadcasts with LED lighting systems
During a broadcast it is not uncommon to perceive an annoying flicker especially during slow motion. This flicker is distracting and should be eliminated where possible. The circumstances that produce the flicker vary upon the frequency modulation, voltage and camera frame rate. The table below provides a general rule of flicker factor values produced by various lighting systems.
A flicker factor of less than 5% will generally not cause problems for slow motion replays at up to 150 frames per second. A lighting system with a flicker factor of less than 5% will eliminate the perceived flicker at most frame rates per second used within the sports television industry. The acceptable level of flicker factor (FF) is indicated in the Illuminance Category Tables.

Flicker Factor Reference Table

Type of Illuminance System	FF value (guide only)
Daylight	0 %
LED Luminaires - % of flicker depend upon the type of LED power supply	<3 %
Discharge lamps with high frequency ballasts	<4 %
Discharge lamps with 3-phase magnetic ballasts for uniform light	8-20 %
Discharge lamps with single-phase magnetic ballasts	30-50 %

Protection against high voltage levels - Surge Protector

SURGE

To guarantee optimal LED fixture performance during the expected service life,
Disano provides its luminaires with an advanced surge protector that can withstand surges of up to 8 kV, based on product.
The surge protector is compliant with EN 61547 and has the aim to protect the LED module and related driver.

It operates in two modes:

• **differential mode:** surge between power conductors, between the phase conductor to the neutral conductor. Substantially, between phase (L) and neutral (N) no substantial surges are present because voltage peaks are suppressed by other equipment connected to the power line; as a consequence a lower surge protector is sufficient. Depending on the type of product, Disano provides a protection from surges of up to 6 kV.

• **common mode:** surge between power conductors, L/N, to the ground or the body of the luminaire if it is classified in class II (i.e. it is installed on a metal pole). Overvoltage in the common mode are generated by lightning strikes and may reach very high levels. Depending on the type of product, Disano provides a protection from surges of up to 8 kV (10kV upon request).



Every year, public/road and amenity lighting managers are called to face the numerous damages caused by lightning and overcurrents. To protect lighting installations from *surge*, i.e. the rapid increase in voltage between parts of opposite polarities and/or the ground, Disano has equipped its luminaires with an EN 61547 compliant **surge protector**, capable of protecting the LED module and their related driver from voltage spikes.

Benefits of the LED lighting
Thanks to their efficiency, LED sources are well suited to illuminate roads and industrial and commercial buildings. In comparison, LEDs consume up to 70 % less energy than traditional lamps and their service life (up to 100,000 hours long) help save on energy and maintenance costs. Moreover, LED systems can be easily monitored via lighting control systems and sensors that control lights based on different needs.

Surge protective device
Street lighting installations and generally all lighting fixtures mounted outdoors are directly exposed to three types of overvoltage which may be caused by:
- the line powering the system/luminaires
- the environment due to the accumulation of electrostatic discharges (ESD)
- lightning strikes falling near the lighting system

LEDs and their related drivers are designed exclusively for low voltage values, making them particularly sensitive to overvoltage. The economic benefits deriving from the use of LED lighting systems could be lost in case of system failure and the consequent maintenance or replacement of the LED modules; it is therefore necessary to equip luminaires with the right surge protective device.

The effects of surges
Surges of reduced magnitude do not necessarily cause the immediate failure of the LED modules or of the drivers that have not been adequately protected. However, if such surges occur very often, they can cause the early wear of the LED and consequently shorten its service life. High power surges caused by lightning, instead may translate into a sudden failure of the LED modules or of the drivers. Overvoltage can cause high current to flow in drivers and in the LED modules, resulting into the following effects:
- partial or total failure of the LED modules or of the drivers
- faster deterioration of the LED modules, shortening their service life
- failure of the command interface

What is a surge
A surge is a rapid increase in voltage on a power line between parts of opposite polarities and/or the ground. Some power surges may exceed the isolation or immunity threshold of electronic components causing it to fail. A power surge may be caused by one of the following conditions:

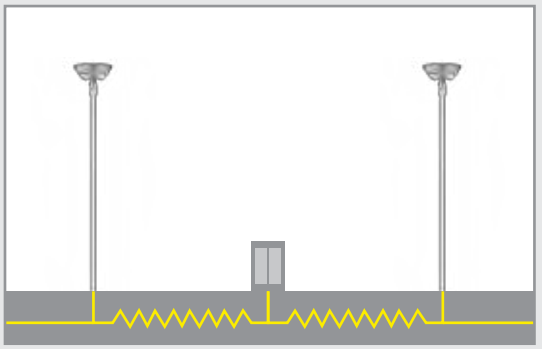

Switching processes/changing the load on the power line

Differential mode: between power conductors, and between the phase conductor and the neutral pole conductor. This mode mainly concerns the primary circuits of the LED driver causing it to fail by short circuit. But if the phenomenon accumulates high energy, it could also affect the LED modules before it dissipates.

Common mode: between power conductors, L/N, to the ground phase or to the body of the luminaire if it is classified in class II (i.e. it is installed on a metal pole). This does not damage the driver's internal circuits but it will be transferred to the secondary circuit, directly affecting the LED modules.

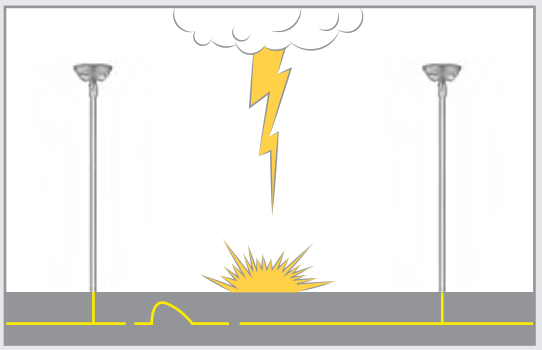

Lightning falling near the installation
These surges are originated when lightning strikes near the lighting installation. The high voltage discharged by the lighting propagates to the ground diminishing its strength as it goes further away from the point where it fell. The metal pole takes on the same potential of the surrounding ground, electrically affecting the LED module and the related driver

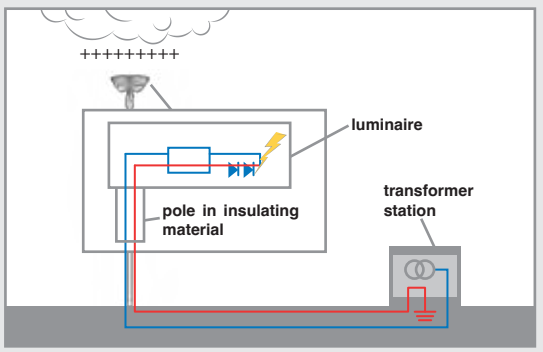

Accumulation of electrostatic discharges
Since the fixture's power system is connected to the ground (TT and TN distribution systems require the connection of the neutral connector to the ground in the transformer station), a differential in potential is created between the luminaire's body and the LED driver's internal circuits connected to the neutral of the power line. The voltage value that is created is so high that it generate a discharge onto the neutral-ground conductors in the following order: metal body – heat sink –LED module – LED driver – neutral conductor. In this case, the failure affects mostly the LED module.

DRIVER Prog

Amenitiy and street lighting fixtures are equipped with the latest generation of programmable drivers that allow controlling different aspects and functions of a lighting system:

Basic Prog (CLD BASIC wiring): luminaires developed to grant great flexibility of use thanks to the possibility to vary luminous flux intensity by changing the LED drive current.

OPERATING MODE	**DESCRIPTION**	
Luminous flux setup	This can be done by programming the drive current values requested when ordering/purchasing the fixture	✔
CLO (Constant Light Output)	The lighting fixture maintains a constant light output throughout its entire service life	✔
Virtual Midnight order with **subcode -30**	Stand-alone system with automatic luminous flux reduction in **4 steps** (up to **max 5 steps** available **upon request**)	✔

Smart control functions for light management can be implemented on a project-specific basis. *These features are not included in standard products and must be activated upon request* (**excluding COB LED** *versions*). They do not require any modification to the entire system. The product only needs to be connected to mains power supply (no pilot cable and/or control bus necessary).

Broadcast Prog	This allows the reconfiguration of the Virtual Midnight profile, including the enabling/disabling of all the fixtures installed on the same power line (broadcast function) via a sequence of electrical impulses.
Mains voltage regulation	This allows varying the luminous flux by adjusting the mains voltage between 170 and 250 V AC
DC power in **EM**	In centralized emergency systems, the LED Driver automatically detects when the power changes from AC to DC and adjusts the lights to a pre-set value (DC level)
Monitoring (default)	The driver is equipped with a micro-processor that records the operating conditions from the moment it is turned on
Setup via **APP**	The NFC technology allows users to set the different operating modes via an APP

Operating mode

LUMINOUS FLUX SETUP
With this function luminaires can adjust their **luminous flux to optimise design requirements** by varying LED drive current. A reduced luminous flux caused by a reduced current allows the LED to operate in better thermal conditions due to the reduction in power consumption.

NOTE: an increase of the luminous flux must always be assessed by our technical staff.

CLO (CONSTANT LIGHT OUTPUT)
The LED's luminous flux is **kept constant throughout the luminaire's entire lifetime**. The Constant Light Output (CLO) function compensates for the natural decay of the luminous flux by progressively increasing LED driver current. This results in a slow and constant increase in the luminaire's power consumption.

MAINS VOLTAGE REGULATION
This function allows the luminaire to be **dimmed when the mains voltage varies between 170 and 250 V AC**. It allows using LED luminaires with a dimmer that varies the mains voltage. It is used to dim the lights of older systems fitting traditional lamps. With the use of a software programme it is possible to set the maximum and minimum brightness levels that the luminaire must ensure when the mains voltage varies.

MONITORING
The driver records the **operating conditions throughout the entire service life** (operating hours, operating temperature, overvoltage). In the event of a product malfunction, the system will quickly and easily detect the problem.

SETUP VIA APP
Luminous flux, Virtual Midnight, power regulation and CLO values can be reprogrammed in accordance with the product's specifications and certificates only after agreeing them with our offices.

BROADCAST PROG

The Broadcast Prog function, **through a regular sequence of voltage interruptions**, allows modifying the driver programming of all the luminaires installed on the same power line by means of a **predefined sequence of ON/OFF cycles** that interrupt the phase without the need of additional cables. The Broadcast Prog function requires the use of an external device to be mounted in the luminaires' electrical supply panel. In addition to the **energy savings** that can be obtained with the "Virtual Midnight" function, there is the **possibility to vary the profile** of the entire system without having to use complex management systems

The external device to be used in the supply panel allows the automatic reconfiguration of the entire line. With the use of additional accessories, it is also possible to control and monitor the system remotely.

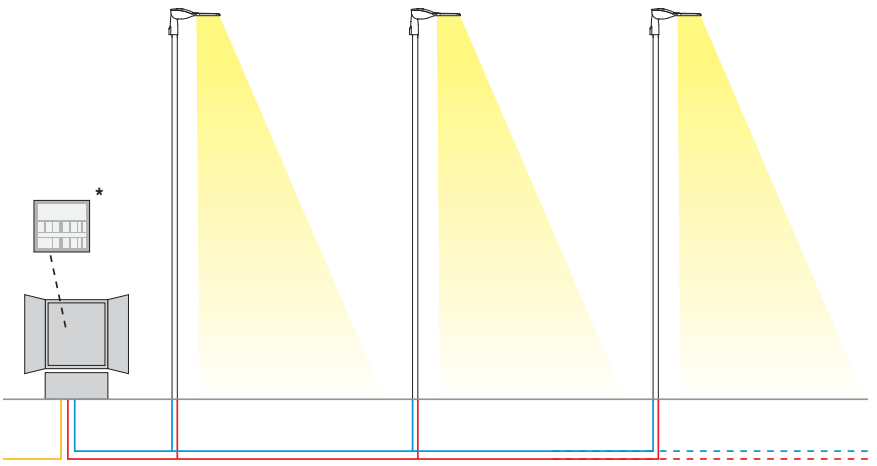

*** device with integrated Broadcast Prog technology**

With this technology it is possible:
- enable/disable the "Virtual Midnight" function
- reconfigure the luminaire's drivers, modifying each one of the 8 steps (4 pre- and 4 post-virtual midnight) in terms of time and luminous flux regulation.

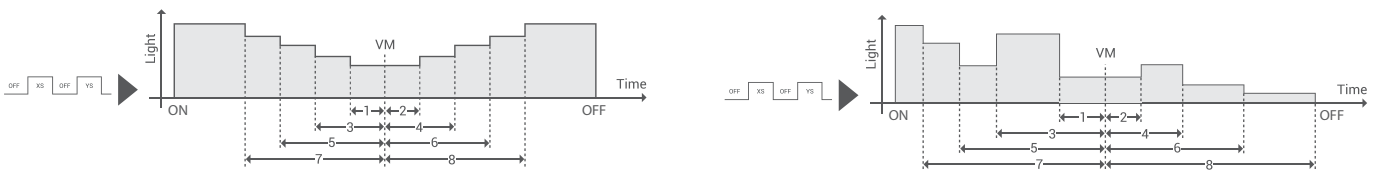

configuration examples

Upon request: you can use a device equipped with SIM card to control the power line of lighting fixtures. By interfacing with a wireless device you can re-programme the LED driver.

Smart Solutions

DISANO illuminazione is capable of offering solutions that meet the needs of modern smart cities that use IoT technologies. This range is based on integrated wireless solutions that use different network protocols (BLE, Zigbee, 5G) and Zhaga and Nema standards for remote control, reporting, detección, and the possibility of CMS integration.

You can find the details of these products in the following pages and/or in the section of our catalogue dedicated to "Lighting Management Systems".

VIRTUAL MIDNIGHT

To **INCREASE ENERGY SAVINGS** at night when there are fewer people and vehicles around, a lighting fixture can be programmed according to a specific profile (customizable on request). The fixture reduces its luminous flux through a self-learning process which, depending on the previous switching on and off times, will determine a hypothetical "virtual midnight". This is the average value between the time the fixture is switched on (sunset) and switched off (sunrise). The "virtual midnight" is the reference point for dimming lights according to the desired profile. The device is integrated in the LED driver and therefore does not require any modification to the system.

In order for the system to function correctly, the system must be adjusted by a device that turns the system on and off on a regular basis every day.

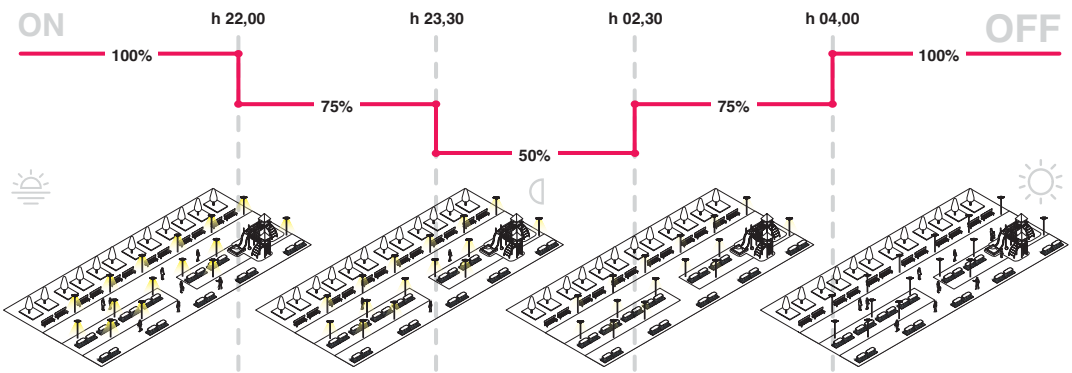

For example, in the central hours of the night, in areas where car and pedestrian traffic decreases significantly, a **reduction in luminous flux keeps the light within safety standards, while avoiding waste**. If we multiply this reduction by tens or hundreds of lamps, we get **significant savings**.

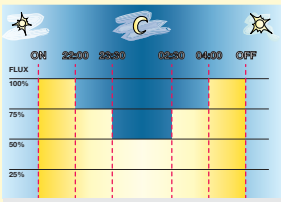

Average annual energy savings: 20%

Factory settings	
Time	**Flux**
on ÷ 22:00	100%
22:00 ÷ 23:30	75%
23:30 ÷ 02:30	50%
02:30 ÷ 04:00	75%
04:00 ÷ off	100%

Virtual Midnight subcode -30: fixtures are equipped with a device to reduce flux in **4 steps** based on the calculation of the virtual midnight.

ATTENTION: *original settings and time slots for the "virtual midnight" value can be customized in up to 5 steps upon request.*

Virtual midnight in 2 steps subcode -35

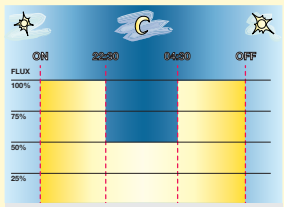

Average annual energy savings: 26%

Settings upon request	
Time	**Flux**
on ÷ 22:30	100%
22:30 ÷ 04:30	50%
04:30 ÷ off	100%

Virtual midnight in 5 steps subcode -32

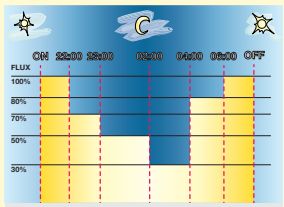

Average annual energy savings: 31%

Settings upon request	
Time	**Flux**
on ÷ 22:00	100%
22:00 ÷ 23:00	70%
23:00 ÷ 02:00	50%
02:00 ÷ 04:00	30%
04:00 ÷ 06:00	80%
06:00 ÷ off	100%

Other configuration examples

Virtual midnight GREEN AREAS subcode -0001

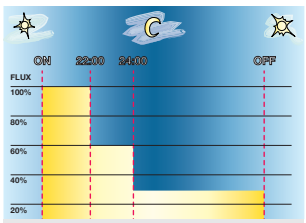

Average annual energy savings: 41%

Settings upon request	
Time	**Flux**
on ÷ 22:00	100%
22:00 ÷ 24:00	60%
24:00 ÷ off	30%

Ideal for green areas and parks, which are closed to the public at specific hours.

Virtual midnight SAFETY (PRIVATE PROPERTY) subcode -0002

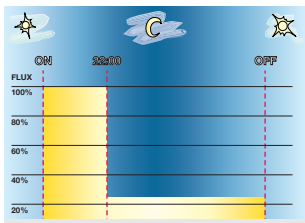

Average annual energy savings: 52%

Settings upon request	
Time	**Flux**
on ÷ 22:00	100%
22:00 ÷ off	25%

Ideal to maintain safety lights at workplaces, in which people/vehicles are not circulating after work hours.

Virtual midnight PRIVATE PROPERTY AND COMMERCIAL subcode -0003

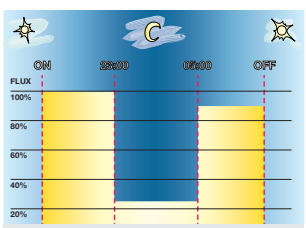

Average annual energy savings: 40%

Settings upon request	
Time	**Flux**
on ÷ 23:00	100%
23:00 ÷ 05:00	25%
05:00 ÷ off	90%

Ideal for private property and commercial areas after work hours.

Virtual midnight METROPOLI (500.000 population) subcode -0005

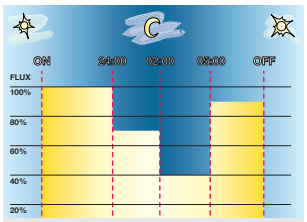

Average annual energy savings: 22%

Settings upon request	
Time	**Flux**
on ÷ 24:00	100%
24:00 ÷ 02:00	70%
02:00 ÷ 05:00	40%
05:00 ÷ off	90%

Virtual midnight BIG CITY (200.000 population) subcode -0006

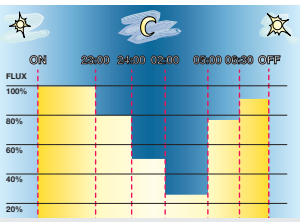

Average annual energy savings: 31%

Settings upon request	
Time	**Flux**
on ÷ 23:00	100%
23:00 ÷ 24:00	80%
24:00 ÷ 02:00	50%
02:00 ÷ 05:00	30%
05:00 ÷ 06:30	75%
06:30 ÷ off	90%

Virtual midnight CITY (50.000 population) subcode -0007

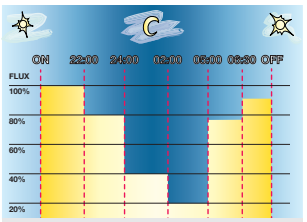

Average annual energy savings: 37%

Settings upon request	
Time	**Flux**
on ÷ 22:00	100%
22:00 ÷ 24:00	80%
24:00 ÷ 02:00	40%
02:00 ÷ 05:00	20%
05:00 ÷ 06:30	75%
06:30 ÷ off	90%

Virtual midnight TOWN (5.000 population) subcode -0008

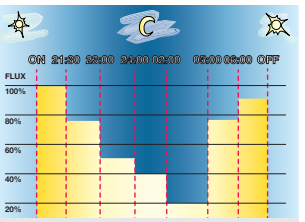

Average annual energy savings: 41%

Settings upon request	
Time	**Flux**
on ÷ 21:30	100%
21:30 ÷ 23:00	75%
23:00 ÷ 24:00	50%
24:00 ÷ 02:00	40%
02:00 ÷ 05:00	20%
05:00 ÷ 06:00	75%
06:00 ÷ off	90%

Virtual midnight VILLAGE (2.000 population) subcode -0009

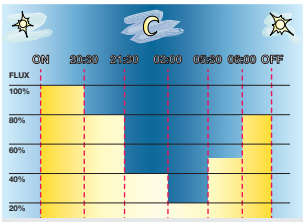

Average annual energy savings: 50%

Settings upon request	
Time	**Flux**
on ÷ 20:30	100%
20:30 ÷ 21:30	80%
21:30 ÷ 02:00	40%
02:00 ÷ 05:00	20%
05:00 ÷ 06:00	50%
06:00 ÷ off	80%

Virtual midnight HIGH SEASONS subcode -0010

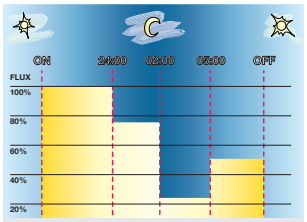

Average annual energy savings: 28%

Settings upon request	
Time	**Flux**
on ÷ 24:00	100%
24:00 ÷ 02:00	75%
02:00 ÷ 05:00	25%
05:00 ÷ off	50%

Ideal for tourist resorts during peak season periods (sea-summer; mountain-winter).

Virtual midnight LOW SEASONS subcode -0011

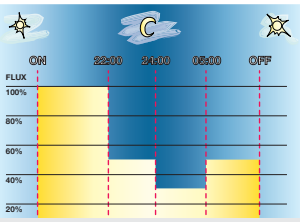

Average annual energy savings: 43%

Settings upon request	
Time	**Flux**
on ÷ 22:00	100%
22:00 ÷ 24:00	50%
24:00 ÷ 05:00	30%
05:00 ÷ off	50%

Ideal for tourist resorts during low season periods.

Virtual midnight FOUR SEASONS subcode -0012

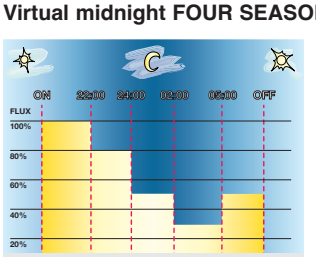

Average annual energy savings: 35%

Settings upon request	
Time	**Flux**
on ÷ 22:00	100%
22:00 ÷ 24:00	80%
24:00 ÷ 02:00	50%
02:00 ÷ 05:00	30%
05:00 ÷ off	50%

Ideal for tourist resorts that do not need to reschedule their lighting times (compromise between high and low season).

Nema - Zhaga socket

To monitor and manage public lighting centrally, lighting fixtures will always be more equipped with wireless controls that will allow their integration with the IoT. Today the market offers two solutions: **NEMA and ZHAGA**. Both solutions offer an electrical and mechanical connection between the control antenna and the lighting fixture.

Nema Socket

Disano's luminaires with **subcode -40** come with the **Nema Socket** to enable the electrical and mechanical connection between the sensor and the light fixture. The socket is made in plastic material and is complete with a gasket to ensure perfect IP protection; moreover, thanks to its removable structure, it can be installed directly onto the luminaire's body (without accessing any internal parts) and **without using tools**, hence facilitating future maintenance; **upon request**, the sealing cap can be installed. The Nema Socket can be adapted to **5/7 poles**: 3 for the electrical connection, and the remaining 2/4 to carry 1-10V or DALI signals; it is also perfectly suited to integrate all "smart" devices for remote lighting control.

Applications: the **Nema Socket** is ideal for use in public or private street lights, car parks, cycle and pedestrian lanes, corridors within hospitals, schools and industrial plants and urban amenities and generally in any area where you need a "smart" control of lighting fixtures.

Upon request, the **sealing cap can be installed**



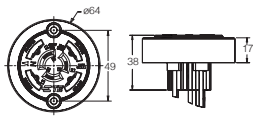

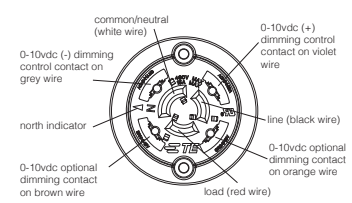

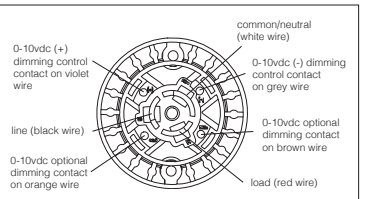

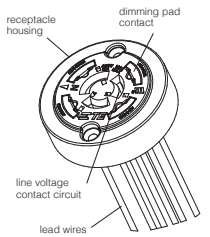

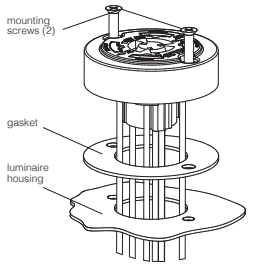

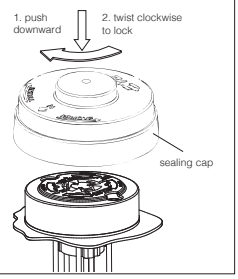

Advantages:
- Easy installation without tools
- Up to 355-degree rotation
- Robust twist-lock contacts for reliable power interconnection
- The socket is pre-terminated with wire conductors to facilitate the integration into new and existing lighting systems
- It accepts DIMM dimmable photocells (ANSI standard) to enable connection between the photocell and the lighting fixture
- Available with two or four dimming contacts to support dimming protocols over one or two channels

Zhaga Socket

Disano's fixtures with **subcode -0054** are compatible with the **Zhaga Socket** that ensures an electric and mechanical connection between the sensor and the luminaire, simplifying the complex architecture of street lighting installations and removing the need for accessory modules and cabling. The **Zhaga Socket** consists of a standard interface between the receptacle on the fixture and its basic components and cover that, together, form the housing of the control module. The built-in low friction seals, that can be coupled together, protect both the fixture and the module. UV-resistant and strong materials complete the features of this reliable connector.

Applications: the **Zhaga Socket** is ideal for use in public or private street lights, car parks, cycle and pedestrian lanes, corridors within hospitals, schools and industrial plants and urban amenities and generally in any area where you need a "smart" control of lighting fixtures.

Sealing cap
supplied **as standard**



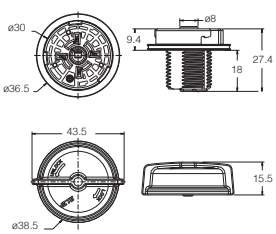

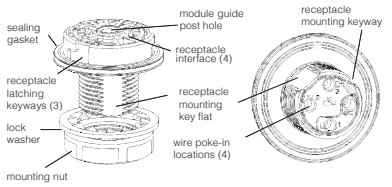

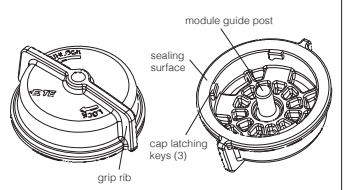

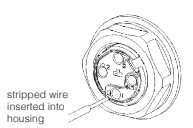

Pin #	Function
1	+24V power supply
2	Negative pole for Dali or Dali based protocol & shared ground return for 24V power supply
3	Positive pole for Dali or Dali based protocal
4	General digital I/O (greater than 7V)

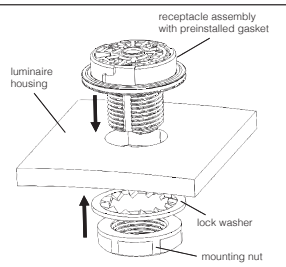

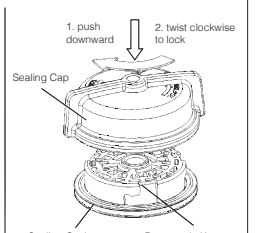

Advantages:
- Easy tool-free mounting. The module is attached and secured with a bayonet clamp
- Compact dimensions for greater design flexibility
- The special (push-in) contacts reduce logistics problems arising from the need to use cables with various lengths for different lighting fixtures
- Single built-in seal that protects both the fixture and the modules, minimizing mounting times.

What is a smart city? A smart city is a city where there is a better quality of life and where public spaces can help citizens achieve their full potential and move more freely, while saving time and respecting the surrounding environment. The intelligence of a «Smart City» is an inteligence that is distributed, shared horizontal and social that promotes the participation of citizens and the organization of the city towards a greater optimization of resources and results. Energy consumption, public resource use and time are all optimized. With the Web and the new technologies, access to services is easier and public spaces can be organized to favour mobility, save time and turn our cities smarter.
Remote management systems make objects more intelligent and recognizable, so that they can communicate data and provide access to aggregated information. Thanks to a more efficient use of the Web, everything within a city (urban fittings, public buildings, monuments, etc.) can play an active role and become collectors and distributors of information about traffic, energy consumption, services and assistance to citizens, cultural and touristic attractions and much more.

The fixture can be equipped with a **control system which provides lighting managers with the ability to improve the performance of urban and street lighting** installations while saving costs by lowering energy usage, optimizing operation and reducing CO2 emissions. The system incorporates the latest technologies in power electronics, communications and IoT. This makes possible, among other features, an on/off scheduled switching, a dynamic programming of lighting levels, map-based visualizations, automatic alarm reports, real-time fixture monitoring and maintenance scheduling of every single luminaire of multiple installations at once. The system has a friendly and secure web-based user interface which can be operated anywhere and anytime from any web-connected device such as computers, smartphones and tablets providing real time and accurate control of the lighting infrastructure.



System Highlights

- Flexible solution
  - Valid for new installations as well as for lighting renovation
  - Autonomous system but integrable with other city services platforms
  - Valid worldwide
  - Compatible with most Smart City services platforms
- Values and revenues
  - Better lighting performance
  - Money savings
  - Energy costs reduction
  - Operation costs reduction
- Users
  - Municipalities and County Councils
  - Smart City platforms operators
  - Managers of large infrastructure
- Applications
  - Street and residential lighting (streets, roads)
  - Urban & architectural lighting (monuments, public spaces)
  - Large infrastructure lighting (airports, ports)
  - Large areas and sport lighting (car parks, stadiums)
  - Urban events lighting (celebrations, demostrations)

System Architecture & Components

- System architecture
  - Smart power electronics: LED drivers
  - Wireless network hardware
  - RF Nodes and GSM Gateways
  - Cloud-based data acquisition and network management
  - Management software suite (Network & data management)
  - Web-based multi-device user friendly interface
- Technical aspects
  - Fully programmable electrical parameters and functionalities
  - Connectivity of sensors
  - Self-diagnosis, notification of alarms
  - Mains voltage and frecuency monitoring
  - High efficiency
- Lighting network nodes
  - Multi-hop wireless mesh network
  - IP-based protocol, broad coverage
  - Automatic neighbour discovery, self-organization, ad hoc configuration
  - Extensibility, interoperability, open standards
  - Robust link, reliable and high-performance network
  - Additional sensor data acquisition (optional)
- Gateway
  - Mesh network concentrator
  - 2G/3G/LTE network gateway
  - Time and date precise synch
- Central host and database
  - Local or cloud hosting available
  - End-to-end secured system
  - Smart City and other horizontal management platforms integrability
  - Multi-level data interchange capabilities, app interfaces
  - Business Intelligence and data analytics
- Management Software Suite
  - Lighting configuration, management and maintenance
  - Easy installation, test capabilities
  - Data network management and configuration
  - Reports, statistics and data visualization tools
- Fast commissioning
  - Ease of installation
  - Assembling outside fitting
  - Remote configuration
  - Reliable, outdoor-proof
- Accuracy
  - GPS accurate location
  - Point-to-point management
  - Real-time operation

Smart City Lighting

- Flexible and avant-garde lighting
  - Programmable lighting
  - Dynamic lighting
  - Reactive to events
  - Makes possible a human centric lighting
  - Increases citizen satisfaction
  - Helps to improve safety on streets
  - Compatible with most existing Smart City & urban services management platforms and easily adaptable thanks to its open architecture
- Environmental sustainability
  - Energy savings
  - Reduction of CO2 footprint
  - Lower lighting pollution
- Data-enabled lighting
  IoT technology enables scalable, site-based or cloud-based street lights connectivity through a robust, self-healing, wireless mesh network

User Friendly Web-based Interface

- Main functionalities
  - Easy lighting levels & timing configuration
  - Creation of customized lighting schedules
  - Energy consumption monitoring
  - Power supply monitoring
  - Alarms and events reporting
  - Operation time recording
  - Geolocation and mapping of luminaires (multiple map choice)
  - Easy allocation of luminaires by town, street, coordenates, type
  - Manteinance planning
  - Multiple users administration
- Optimum lighting maintenance
  - Possibility of preventive maintenance
  - Optimization of reactive maintenance
- Privacy and security commitment
  - Encrypted communications
  - Safe communications exchange through highest encryptation levels
  - Database access security
  - Secure hosting
  - Cloud protection and data confidentiality
  - Safe access with authentication
  - Highest protection against unauthorized access

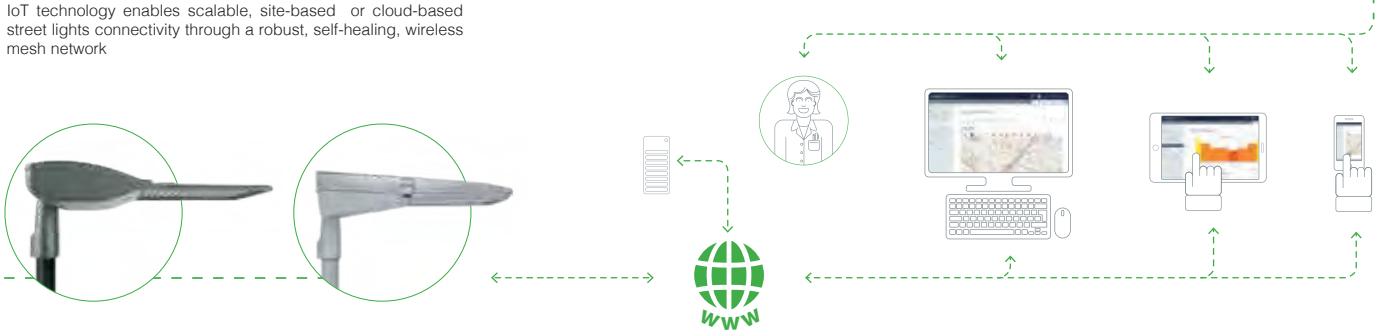

Power line carrier remote control systems

A special control system can be inserted inside the lighting fixture or into the lamp pole to monitor the product's operating parameters (Ordered with **sub-code -0078**). This control system is electrically connected to the fixture through a 1-10Vdc or PWM output of the fixture's transformer. This type of remote control system is called "point-to-point". A "point-to-point" system is a set of electrical equipment used to monitor, programme and control individual LED lighting fixtures. This system is based on the power line carrier (PLC) technology that enables a digital two-way communication between the module installed in the fixture and the control system. The control system is located inside the control panel. The digital data are adjusted to the mains voltage, so no BUS or extra conductors are needed.
Thanks to this "point-to-point" system, it is possible, for example, to monitor and save the fixture's electrical parameters and, based on these settings, generate failures or trigger alarms, turn off/on or adjust the fixture's brightness. This is done through either manual or pre-set commands. The communication between the control centre (PC) and the "point-to-point" system occurs through a control panel using normal communication channels (GSM-GPRS-network LAN etc.). The commands sent from the control centre are conveyed by the control module located inside the panel through the power line carriers which dispatch the commands to the individual fixtures and vice versa. The management module can control up to 990 lights and can reach a distance of 1.5 km. Beyond this distance, an extra module can be inserted into the fixture to serve as a signal repeater. The control module has a series of pre-set light configurations for light dimming. However, each controller inserted into a fixture saves several information regarding the cycle that should be used for that specific fixture. This cycle, which consists of up to 5 steps, is started every day at pre-set hours, and serves the purpose to define the application time and the action to be performed. The "point-to-point" module is independent from the cycle management of its corresponding fixture, and will work even if the communication from the control module is lost.

These controls, settings and data are all managed through a software programme that regularly downloads all the information required to manage the systems and check for any failures.

Technical characteristics of control module
(to be inserted inside the control panel)

Power: 230Vac 50/60Hz (about 21mA at 230V, 44mA Max).
Container: degree of protection IP20, bar connection DIN 9 modules.
Clock calendar: maximum error of +/- 4min/year in the 0-70°C range.
Memory: nearly 20dd for a system with a maximum number of controlled points (990).
Operating temperature: ambient temperature -20°C +55°C.
Without power supply: no loss of data, 3 days of clock life.
Input sections: configured as 2 in 24Vdc.

Standard supply:
- clock calendar from PC control centre.
- all the settings made by the modules are saved.
- sampling: up to 3 for each night, of which one is fixed after 7 min. from system start-up.
- RS232 asynchronous serial port for the system's local configuration.
- RS485/RS422 asynchronous port for the connection to the master system and to the other modules.
- 2 LED lights (RX/TX) to indicate communication activity.
- LED light to indicate power.

Technical characteristics of step-to-step controller
(to be inserted inside the fixture)

Power: 150 - 254Vac 50/60Hz self-powered.
Container: plastic with IP20 or IP66 degree of protection.
Connections: IP66 version with cables FROR-Npi 2x2.5 mm2 L=20cm
Version IP20 with clamps; installed in series between power supply and fixture housing.
Internal consumption: min. 0.7 VA
Operating temperature: ambient temperature -20°C +65°C.
Communication: ASK power line carrier
Baud rate: 1000
Regulatory framework: EN50065-1 , EN50178
Class of insulation: Class 2
Output: 1-10 Vdc; PWM; DALI

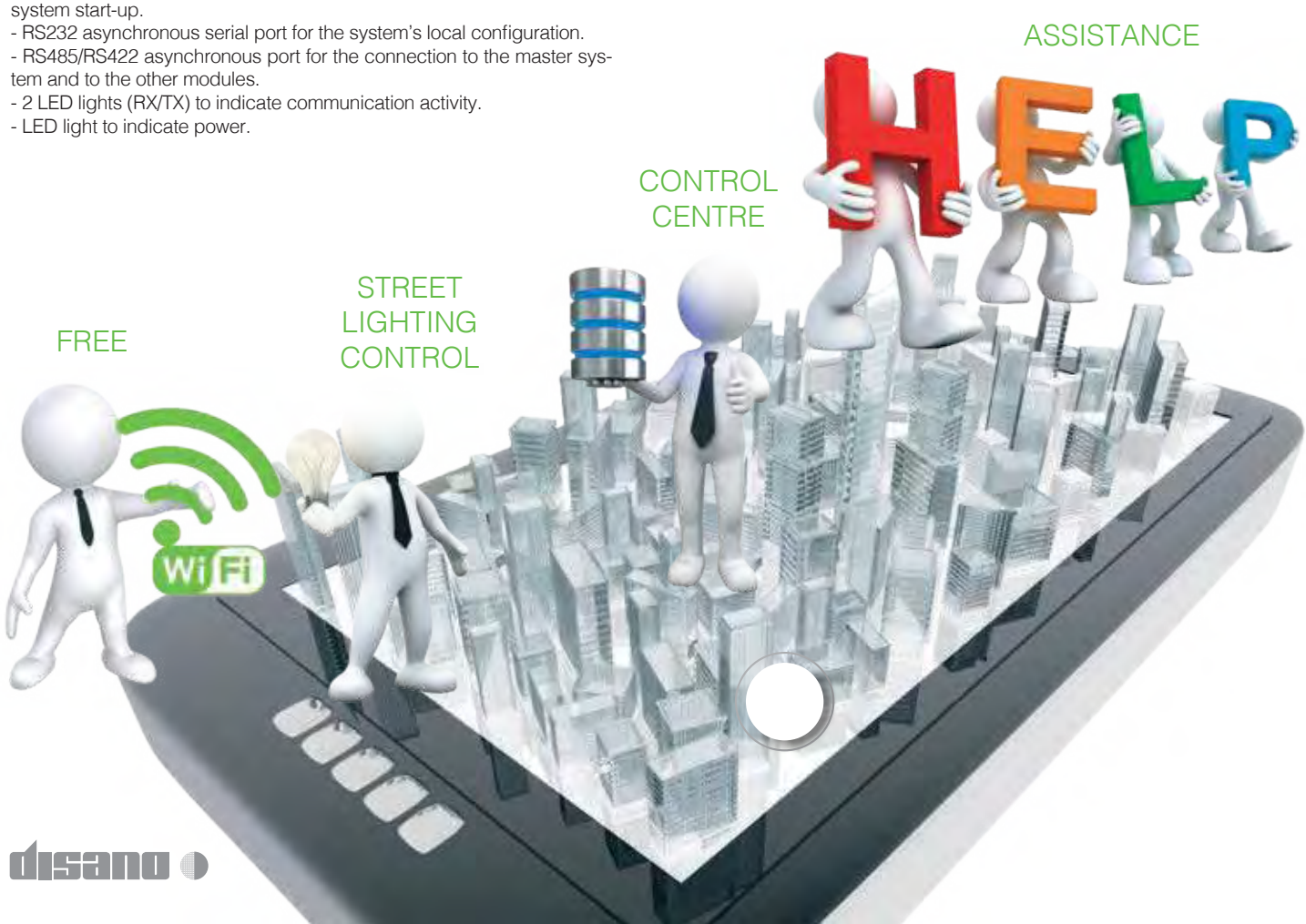

Regulations regarding street lighting and light quality

To improve lighting output, save energy: the constantly growing amount of information regarding the possibilities and opportunities offered by the use of LED sources in street lighting led DISANO to provide clarifications in this short text where it explains why Disano fixtures are suitable for these kinds of installations, while complying with street lighting standards (EN13201 and UNI11248) and Regional regulations required to fight lighting pollution and save energy costs.

The luminance levels used for street lighting fall within the levels ranging between 0.01cd/m2 and 3.00cd/m2.

0,01 cd/m²		**3,00 cd/m²**
Star-studded sky	Street lighting	Daylight or indoor lighting

Numerous studies and trials have tested drivers'reaction times both in the presence of fixed obstacles and on streets illumined with different light sources. On streets with luminance levels ranging between 0.01 – 3.00, tests proved that reaction time is remarkably slower when white light bulbs are used. This means that, in order to have the same reaction time, it is necessary to have higher luminance levels when sodium lamps are used and lower levels if metal iodide or LED lamps are used. Moreover, with low luminance levels and light sources emitting predominantly blue/green lights, there are 7% fewer accidents per km compared to predominantly yellow/red lights. (Source: Anie)
The UNI11248 standard introduces new safety parameters. One of these parameters concerns the quality of light. The UNI standard states that when sources with a colour rendering below 30 are used, the lighting category of the reference road must be increased. In other words, it is necessary to increase the amount of light so that the lighting system is compliant with requirements.
Sources with a colour rendering above 60, instead, must reduce the reference road category and therefore the required luminance levels. This involves that a road's lighting system varies depending on the colour rendering of the lighting sources being installed: if sources have high colour renderings then the average luminance levels imposed by the Standard will be lower, therefore reducing the installed power

Light pollution

LEDs, just like any other light source, require optics or lenses to orient the light beam and prevent it from directing light upwards, and meeting anti light pollution requirements. Disano has designed a series of reflectors and optics that can effectively prevent light pollution. These reflectors orient the light beam in such a way as to obtain photometric distributions, which can be installed not only in road lighting systems, but in many other applications, even improving performance if compared with the optics of traditional lamps. Each single LED is controlled and equipped with a reflector that models the light beam, optimizing performance and obtaining sharp light distribution. Optics guarantee performance rates ranging from 80% to 95%, which are much higher that the values compared to the reflectors of discharge lamps.

LED technology and traditional devices: efficiency and luminous flux compared

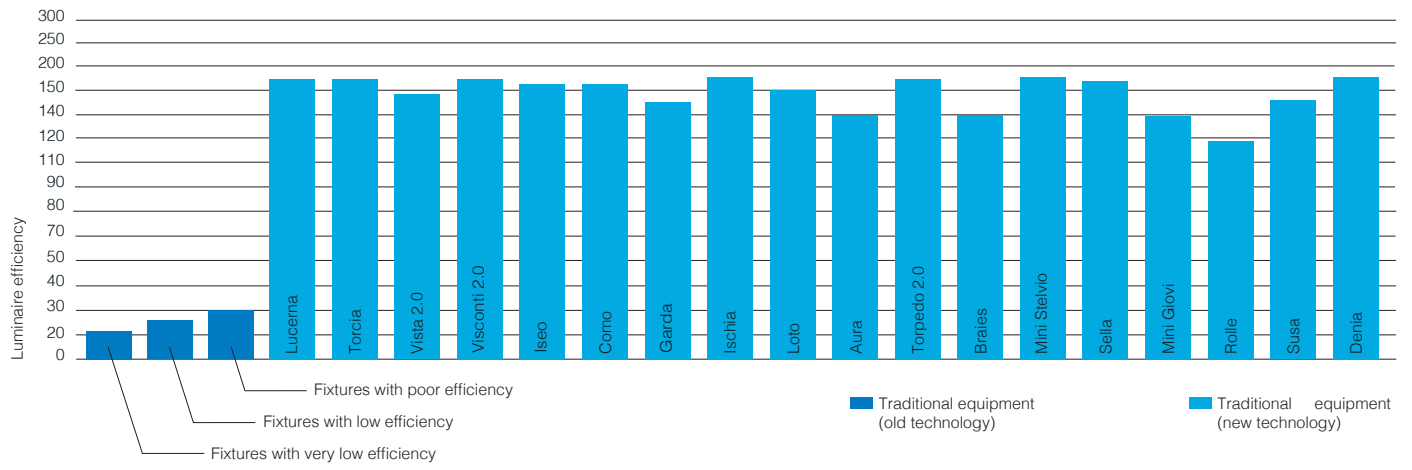

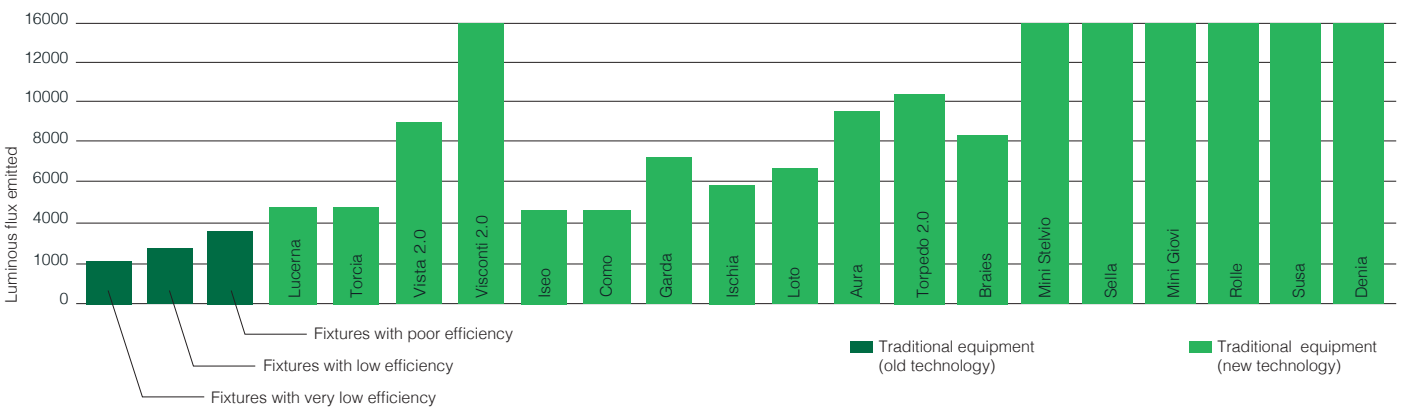



LED PANEL

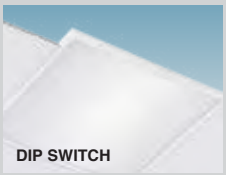

CRETA



RODI



COMFORTSQUARE



LED Panel HE - DIP SWITCH p. 5
LED Panel p. 6
Creta p. 8
Rodi HE - DIP SWITCH p. 12
Rodi HP p. 13
Comfortsquare - DIP SWITCH p. 18

MINICOMFORT



IBIS



HERON



SUPERCOMFORT



Minicomfort p. 26
Ibis p. 32
Heron p. 34
Supercomfort p. 36

COMPACT DARK



COMPACT



COMPACT IP65



HEALTH DARK - HEALTH



Compact Dark - DIP SWITCH p. 38
Compact - DIP SWITCH/ CCT SWITCH p. 40
Compact IP65 - CCT SWITCH p. 42
Health Dark - DIP SWITCH p. 44
Health p. 48

COMFORT PANEL



ERMETICA

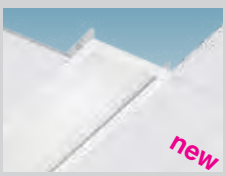

PARIGI



MADRID



Comfort Panel p. 49
Ermetica p. 50
Parigi p. 52
Madrid p. 54

DISANLENS

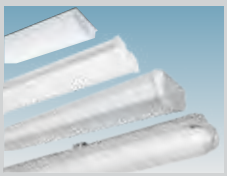

CHANNEL



NIKOS



LUNA



Disanlens p. 62
Channel p. 68
Nikos p. 70
Luna - CCT/POWER SWITCH p. 72

OBLÒ 2.0 - OBLÒ J



COMPACT 2.0 - GLOBO 2.0



GLOBO - RIQUADRO



CUBO - ORMA - RIGO



Oblò 2.0 p. 74
Oblò J 2.0 p. 76
Compact 2.0 - CCT/ DIP SWITCH p. 78
Globo 2.0 - CCT/POWER SWITCH p. 79
Globo/Globo - CCT/POWER SWITCH p. 80
Riquadro p. 80
Cubo / Orma / Rigo p. 81

SAFETY 2.0 - 3.0



SAFETY ROUND



SAFETY SQUARE



SAFETY FLAG



Safety 2.0 p. 82
Safety 3.0 p. 83
Safety Round p. 84
Safety Square p. 84
Safety Flag p. 85

GENERAL CHARACTERISTICS

Housing and frame: housing in galvanised steel sheet, and frame in aluminium.

Inner slab: in PMMA.

Diffuser: in prismatic engineering plastic with high thermal transmittance.

UGR glare index: UGR<19 - EN 12464.

Rapid wiring connection: the fixture does not need to be opened, it can be easily embedded into a ceiling, and almost no need for maintenance.

LED: power factor: 0,95
Luminous flux maintenance 80%: 80.000h (L90B10).
Photobiological safety class: exempt group

LOW FLICKER

Product with a very low flicker; uniform light for greater eye protection.

OTHER CHARACTERISTICS



Construction quality is an important factor for the product's aesthetics and performance, turning into a key element to ensure reliability over time. In the case of Disano's **LED Panel**, the slab is made in top-notch material, **PMMA** (poly methyl methacrylate), a polymer that keeps its characteristics unaltered in time and prevents the lens from yellowing.
Disano has produced **LED Panel** with materials that ensure long lasting operation to save its original technical characteristics: 80% lumen maintenance for **50000h** (L80B20), perfect colour rendering (**CRI>80 or CRI>90**), no glare (**UGR<19**) and certified low flicker level.

OTHER INFORMATION

DIMM DIG

Standard version **CLD D-D (DALI)** wiring with **subcode -0041:** thanks to pre-programmed settings or a software programme, this type of wiring allows accurate light emission dimming.

UGR <19

The UGR (unified glare rating) is an international unified measure developed by the CIE (Commission International de l'Eclairage) to assess the direct glare generated by a lighting system. The European standard regulating the lighting of indoor work places (**UNI-EN 12464-1**) recommends a specific UGR value for different applications ranging between **10 and 30**; **the lower the UGR value, the lower the glare**. The exact value of this index differs by project type because it depends on the position of the luminaires, room characteristics (dimensions, reflections) and on the point of observation of viewers.

UPON REQUEST

Possibility of centralized lighting point control or via **external** presence/lighting sensors (see chapter *Lighting management systems and recommendations*).

-0050 EM-EC

Version **CLD EC** wiring with **sub-code -0050:** permanently mounted fixture, operating in AC/DC mode, with centralized emergency device, not incorporated into the fixture.

PUSH DIG

Version **CLD D-D (PUSH)** wiring with **subcode -0045:** it is p-ossible to create lighting systems that can be easily switched ON/OFF and dimmed at low costs using conventional mains voltage push-buttons for lighting control.

CEILING MOUNTED INSTALLATION WITH FRAME FOR LED PANEL ART. 840 - 842 - 844



acc. 595 frame 600x600 h45	
white	998031-00
Frame in white-coated aluminium; to be used for ceiling installation of LED Panel art. 840 - 842 - 844.	



acc. 595 frame 1200x300 h45	
white	998032-00
Frame in white-coated aluminium; to be used for ceiling installation of LED Panel R art. 840 - 842.	

1) Assembly the frame according to the following illustration (**fig.1**)

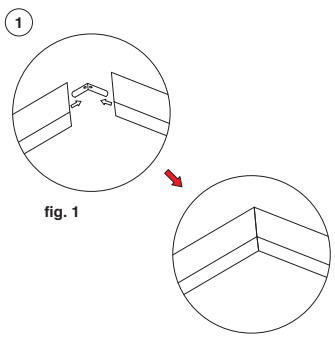

fig. 1

2) Installation
- Drill 4 holes at marking position with expansion screws and self-tapping screws (not screw too tight).
- Install the frame on the roof.
- Move and fix the ceiling frame (lift to right, or right to left) through hardy hole.
- Tighten self-tapping screws.
- Open the frame **B** on one side, insert the panel into the frame, then seal the frame with tightening screws.

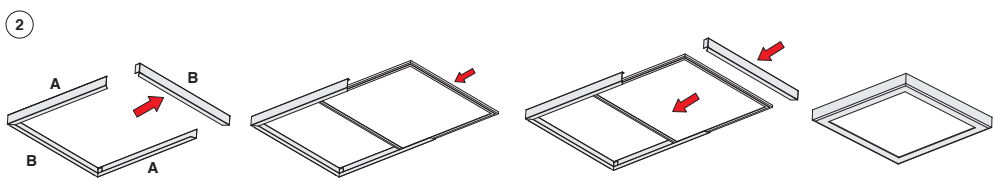

ACCESSORIES

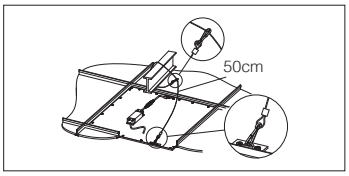

acc. 320 safety cord
998004-00
Steel safety cord.

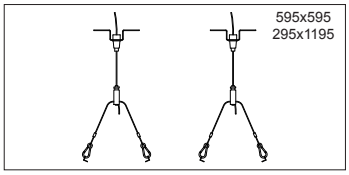

acc. 2520 simple suspension
994631-00
Suspension supplied with steel wire, and millimetric adjustment. Bag containing 2 pieces.

v.a. IP20 IK06
v.l. IP43 IK06

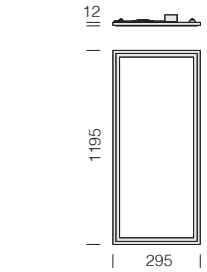

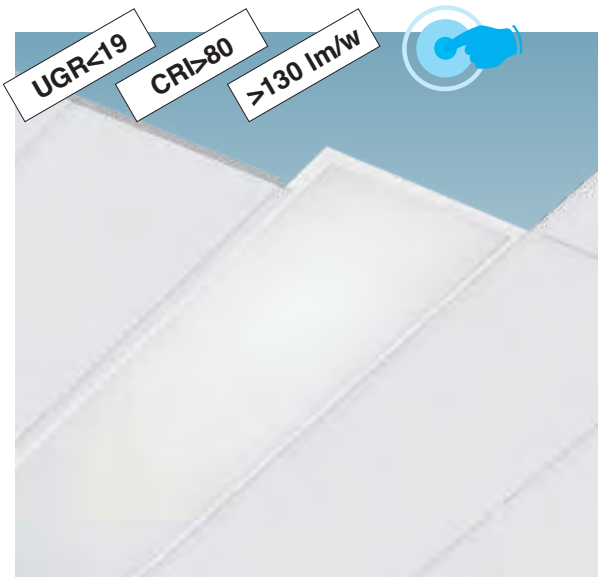

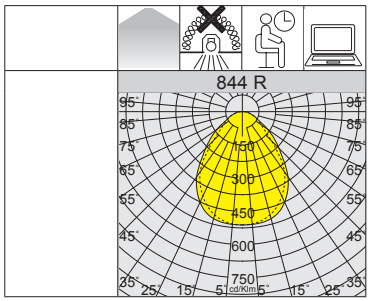

L90 B10 80.000h
RG0
DIMM DIG
-0050 EM-EC
LOW FLICKER
UGR <19
3000K
4000K

Upon request versions with:
- emergency wiring with centralized power supply **CLD EC** with **sub-code -0050.**
- **CLD D-D (PUSH)** wiring with **sub-code -0045.**

844 LED Panel R HE - HIGH EFFICIENCY - DIP SWITCH

		CLD				LUMEN OUTPUT (tq= 25 °C)
LED	colour	weight	code	I out	W tot	K - ølm - CRI
LED	white	2.10	150227-00	***800***	**31**	4000K - 4081lm - CRI>80
			150227-39			3000K - 3877lm - CRI>80

		CLD D-D (DALI)			LUMEN OUTPUT (tq= 25 °C)
LED	colour	weight	code	W tot	K - ølm - CRI
LED	white	2.10	150227-0041	**31**	4000K - 4081lm - CRI>80

DALI version with the driver set to the maximum power of the DIP SWITCH version.

DIP SWITCH SETTING		
		LUMEN OUTPUT (tq= 25 °C)
I out	W tot	K - ølm - CRI
700	27	4000K - 3593lm - CRI>80
800	***31***	*4000K - 4081lm - CRI>80*
900	35	4000K - 4538lm - CRI>80
1000	40	4000K - 4996lm - CRI>80

GRADATION PAR DIP SWITCH		
		LUMEN OUTPUT (tq= 25 °C)
I out	W tot	K - ølm - CRI
700	27	3000K - 3413lm - CRI>80
800	***31***	*3000K - 3877lm - CRI>80*
900	35	3000K - 4311lm - CRI>80
1000	40	3000K - 4746lm - CRI>80

v.a. IP20 IK06
v.l. IP43 IK06

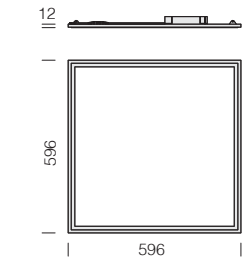



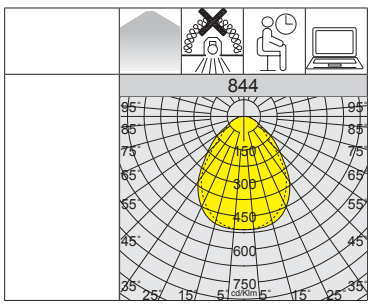

L90 B10 80.000h
RG0
DIMM DIG
-0050 EM-EC
LOW FLICKER
UGR <19
3000K
4000K

Upon request versions with:
- emergency wiring with centralized power supply **CLD EC** with **sub-code -0050.**
- **CLD D-D (PUSH)** wiring with **sub-code -0045.**

844 LED Panel HE - HIGH EFFICIENCY - DIP SWITCH

		CLD				LUMEN OUTPUT (tq= 25 °C)
LED	colour	weight	code	I out	W tot	K - ølm - CRI
LED	white	2.00	150225-00	***800***	**31**	4000K - 4081lm - CRI>80
			150225-39			3000K - 3877lm - CRI>80

		CLD D-D (DALI)			LUMEN OUTPUT (tq= 25 °C)
LED	colour	weight	code	W tot	K - ølm - CRI
LED	white	2.00	150225-0041	**31**	4000K - 4081lm - CRI>80

DALI version with the driver set to the maximum power of the DIP SWITCH version.

DIP SWITCH SETTING		
		LUMEN OUTPUT (tq= 25 °C)
I out	W tot	K - ølm - CRI
700	27	4000K - 3593lm - CRI>80
800	***31***	*4000K - 4081lm - CRI>80*
900	35	4000K - 4538lm - CRI>80
1000	40	4000K - 4996lm - CRI>80

GRADATION PAR DIP SWITCH		
		LUMEN OUTPUT (tq= 25 °C)
I out	W tot	K - ølm - CRI
700	27	3000K - 3413lm - CRI>80
800	***31***	*3000K - 3877lm - CRI>80*
900	35	3000K - 4311lm - CRI>80
1000	40	3000K - 4746lm - CRI>80

acc. 907 springs

998038-00

Springs for recessed non-surface mounting on plasterboard. Bag containing 4 pieces.

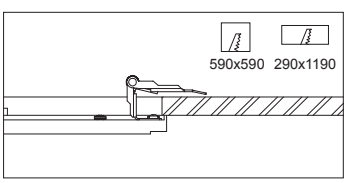

acc. 600 EM power kit

1h	986604-00
3h	986604-31

EM (emergency) lamp power kit complete with connectors.

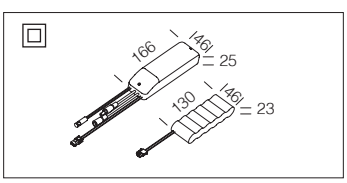

L90 B10 80.000h
RG0
DIMM DIG
-0050 EM-EC
LOW FLICKER
UGR <19
3000K
4000K

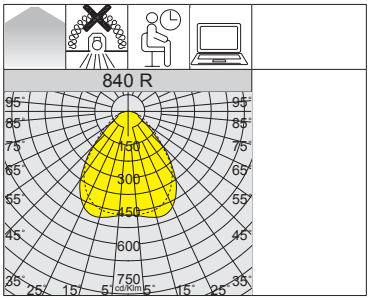

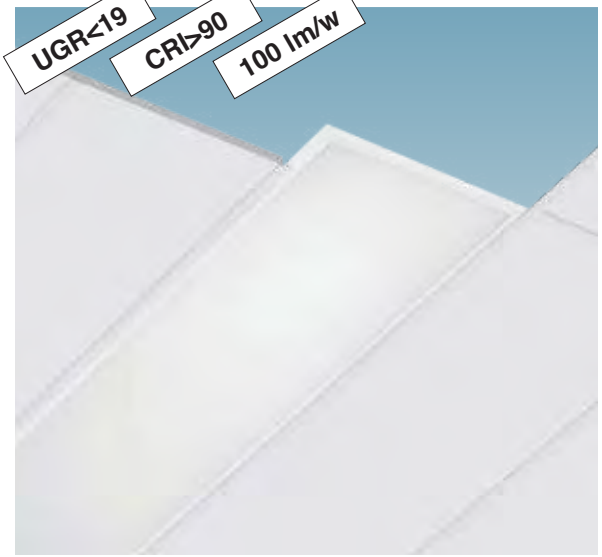

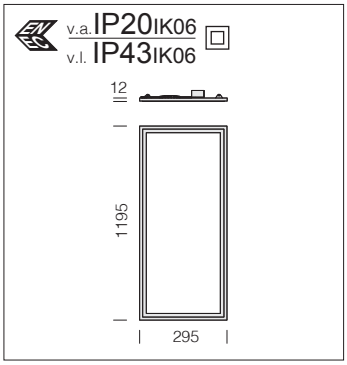

Upon request versions with:
- emergency wiring with centralized power supply **CLD EC** with **sub-code -0050.**
- **CLD D-D (PUSH)** wiring with **sub-code -0045.**

840 LED Panel R						
		CLD		CLD D-D (DALI)		LUMEN OUTPUT (tq= 25 °C)
LED	colour	weight	code	code	W tot	K - ølm - CRI
LED	white	2.10	150209-00	150209-0041	**33**	4000K - 3318lm - **CRI>90**
			150209-39			3000K - 3086lm - **CRI>90**

L90 B10 80.000h
RG0
DIMM DIG
-0050 EM-EC
LOW FLICKER
UGR <19
3000K
4000K

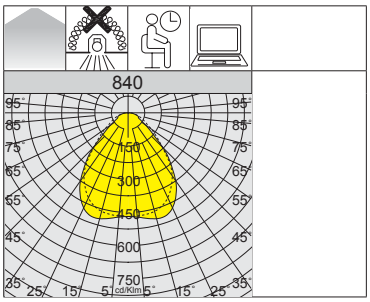

***** art. 150211-00: no **UGR<19**

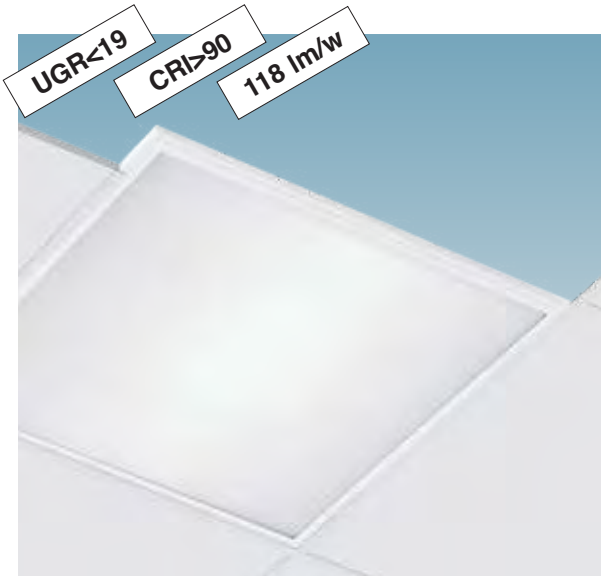

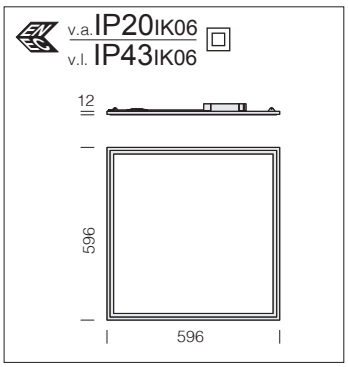

Upon request versions with:
- emergency wiring with centralized power supply **CLD EC** with **sub-code -0050.**
- **CLD D-D (PUSH)** wiring with **sub-code -0045.**

840 LED Panel						
		CLD		CLD D-D (DALI)		LUMEN OUTPUT (tq= 25 °C)
LED	colour	weight	code	code	W tot	K - ølm - CRI
LED	white	2.00	150208-00	150208-0041	**33**	4000K - 3318lm - **CRI>90**
			150208-39			3000K - 3086lm - **CRI>90**
LED*	white	2.00	150211-00		**36**	4000K - 4250lm - **CRI>90**

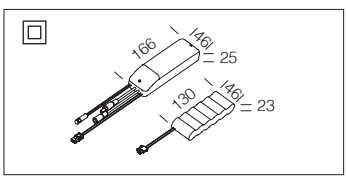

acc. 600 EM power kit	
1h	986604-00
3h	986604-31
EM (emergency) lamp power kit complete with connectors.	

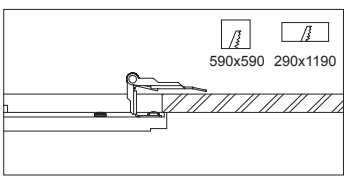

acc. 907 springs
998038-00
Springs for recessed non-surface mounting on plasterboard. Bag containing 4 pieces.

v.a. IP20 IK06
v.l. IP43 IK06

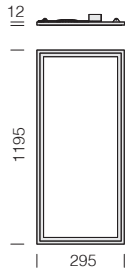

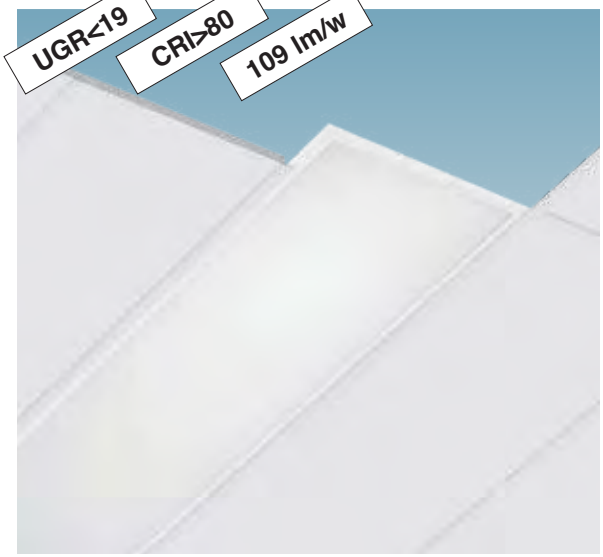

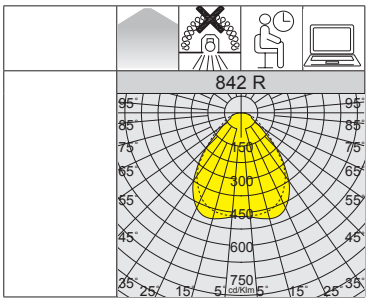

L90 B10 80.000h
RG0
DIMM DIG
-0050 EM-EC
LOW FLICKER
UGR <19
3000K
4000K

Upon request versions with:
• emergency wiring with centralized power supply **CLD EC** with **sub-code -0050.**
• **CLD D-D (PUSH)** wiring with **sub-code -0045.**

842 LED Panel R

		CLD		CLD D-D (DALI)		LUMEN OUTPUT (tq= 25 °C)
LED	colour	weight	code	code	W tot	K - ølm - CRI
LED	white	2.10	150206-00	150206-0041	**33**	4000K - 3600lm - CRI>80
			150206-39			3000K - 3348lm - CRI>80

v.a. IP20 IK06
v.l. IP43 IK06

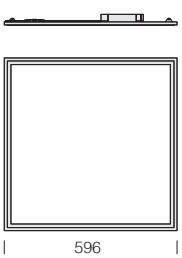



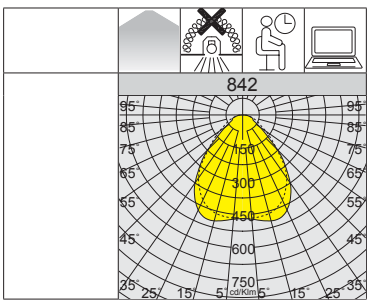

L90 B10 80.000h
RG0
DIMM DIG
-0050 EM-EC
LOW FLICKER
UGR <19
3000K
4000K

Upon request versions with:
• emergency wiring with centralized power supply **CLD EC** with **sub-code -0050.**
• **CLD D-D (PUSH)** wiring with **sub-code -0045.**

842 LED Panel

		CLD		CLD D-D (DALI)		LUMEN OUTPUT (tq= 25 °C)
LED	colour	weight	code	code	W tot	K - ølm - CRI
LED	white	2.00	150205-00	150205-0041	**33**	4000K - 3600lm - CRI>80
			150205-39			3000K - 3348lm - CRI>80

acc. 907 springs

998038-00

Springs for recessed non-surface mounting on plasterboard. Bag containing 4 pieces.

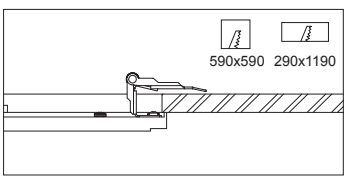

acc. 600 EM power kit

1h	986604-00
3h	986604-31

EM (emergency) lamp power kit complete with connectors.

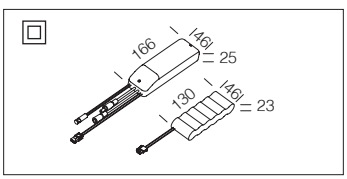

GENERAL CHARACTERISTICS

Creta is the new recessed LED **backlighting** ceiling fixture that opens up a whole different way of thinking about artificial lighting; it offers a very bright and diffused lighting, while keeping energy consumptions extremely low and setting itself as the ideal solution for general and functional lighting applications

Housing and frame: housing in galvanised steel sheet, and frame in aluminium, contact mounting on the cross T structure.

Optics: secondary lenses in PMMA with high transparency and non-yellowing properties.

Wiring: rapid wring connection, the fixture does not need to be opened.

LED: Power factor ≥0.95.
Luminous flux maintenance 80%: 80.000h (L80B10).
Luminous flux maintenance 90%: 50.000h (L90B10).
Photobiological safety class: exempt group.

LOW FLICKER

Product with a very low flicker; uniform light for greater eye protection.

OTHER CHARACTERISTICS



Fixture with a thin design and lenticular optics, ideal in environments that require a controlled lighting distribution and maximum visual comfort (UGR<17).

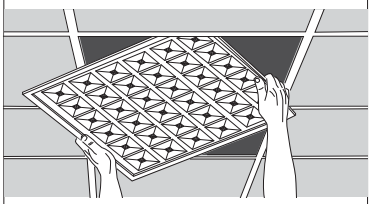

Rapid wiring connection, the fixture does not need to be opened, it can be easily embedded into a ceiling, and almost no need for maintenance.



Fixture complete with external driver. It can be easily installed in false ceilings.

OTHER INFORMATION

DIMM DIG

Standard version **CLD D-D (DALI)** wiring with **subcode -0041:** thanks to pre-programmed settings or a software programme, this type of wiring allows accurate light emission dimming.

UGR <16 UGR <17

The UGR (unified glare rating) is an international unified measure developed by the CIE (Commission International de l'Eclairage) to assess the direct glare generated by a lighting system. The European standard regulating the lighting of indoor work places (**UNI-EN 12464-1**) recommends a specific UGR value for different applications ranging between **10 and 30**; **the lower the UGR value, the lower the glare**. The exact value of this index differs by project type because it depends on the position of the luminaires, room characteristics (dimensions, reflections) and on the point of observation of viewers.

UPON REQUEST

Possibility of centralized lighting point control or via **external** presence/lighting sensors (see chapter *Lighting management systems and recommendations*).

-0050 EM-EC

Version **CLD EC** wiring with **sub-code -0050:** permanently mounted fixture, operating in AC/DC mode, with centralized emergency device, not incorporated into the fixture.

Art. 833 - cod. 150240-2121

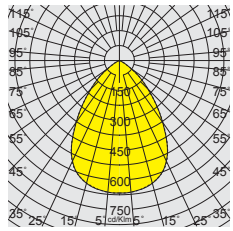

CEILING MOUNTED INSTALLATION WITH ACC. 595 FRAME FOR CRETA



acc. 595 frame 600x600 h70	
white	998035-00
Frame in white-coated aluminium; to be used for ceiling installation of Creta.	

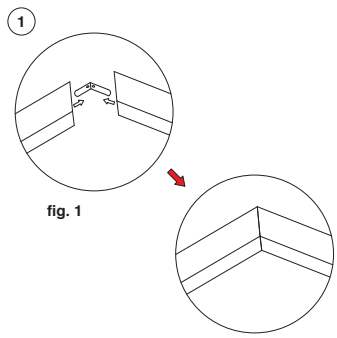

fig. 1

1) Assembly the frame according to the following illustration (**fig.1**)

2) Installation
- Drill 4 holes at marking position with expansion screws and self-tapping screws (not screw too tight).
- Install the frame on the roof.
- Move and fix the ceiling frame (lift to right, or right to left) through hardy hole.
- Tighten self-tapping screws.
- Open the frame **B** on one side, insert the panel into the frame, then seal the frame with tightening screws.

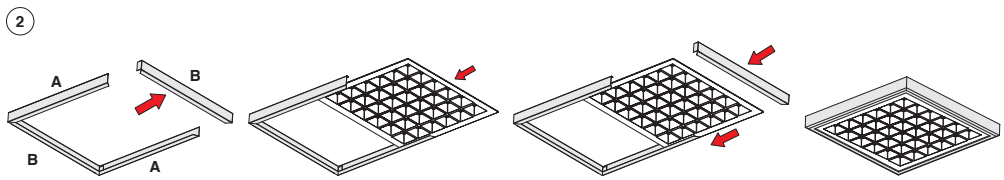

ACCESSORIES

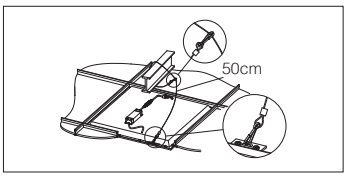

acc. 320 safety cord
998004-00
Steel safety cord.

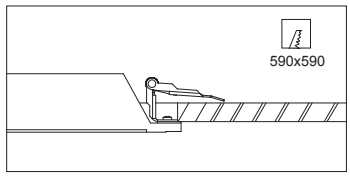

acc. 907 springs
998038-00
Springs for recessed non-surface mounting on plasterboard. Bag containing 4 pieces.

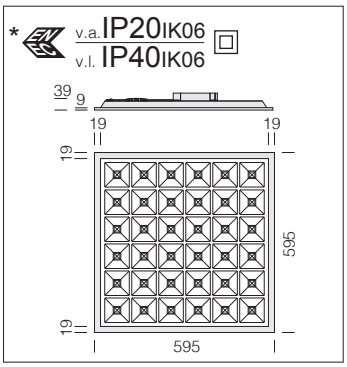

Upon request versions with:
• emergency wiring with centralized power supply **CLD EC** with **sub-code -0050.**

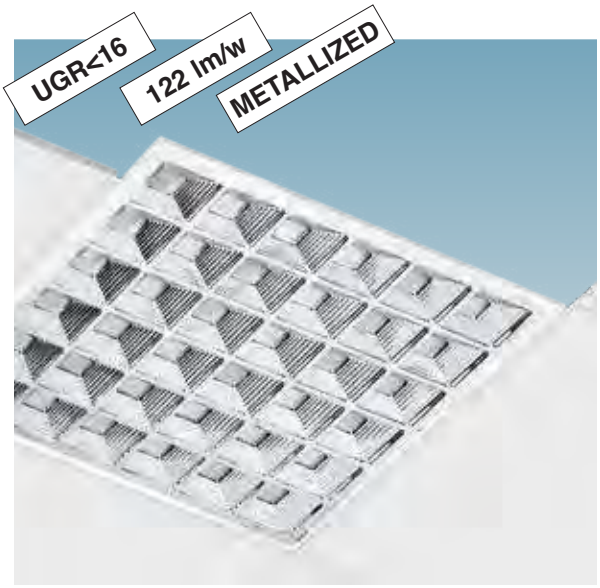

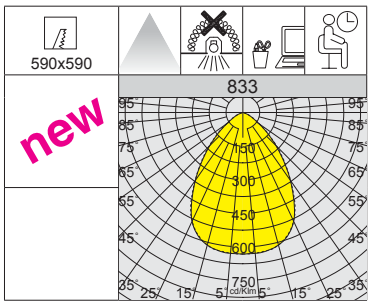



L80 B10 80.000h
L90 B10 50.000h
RG0
U.V.
DIMM DIG
LOW FLICKER
UGR <16

833 Creta - UGR<16

		CLD			CLD D-D (DALI)		LUMEN OUTPUT (tq= 25 °C)
LED	colour	weight	L	code	code	W tot	K - ølm - CRI
LED	metallized	1.70	595	150239-00	150239-0041	31	4000K - **3800lm** - CRI>80

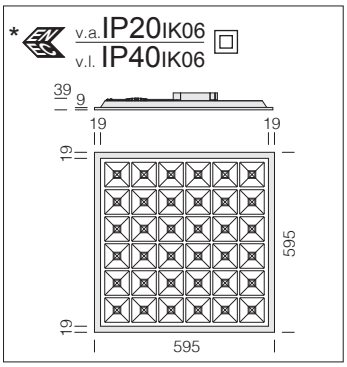

Upon request versions with:
• emergency wiring with centralized power supply **CLD EC** with **sub-code -0050.**



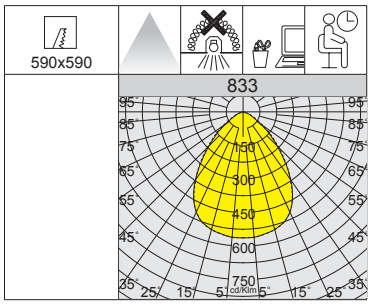

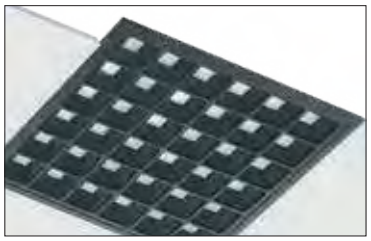

L80 B10 80.000h
L90 B10 50.000h
RG0
U.V.
DIMM DIG
LOW FLICKER
UGR <17
3000K
4000K

833 Creta - UGR<17

		CLD			CLD D-D (DALI)		LUMEN OUTPUT (tq= 25 °C)
LED	colour	weight	L	code	code	W tot	K - ølm - CRI
LED	white	1.70	595	150240-00	150240-0041	31	4000K - 3980lm - CRI>80
				150240-39	150240-3941		3000K - 3789lm - CRI>80
LED	black	1.70	595	150240-2121	150240-2141	31	4000K - 2489lm - CRI>80

acc. 600 EM power kit	
1h	986604-00
3h	986604-31
EM (emergency) lamp power kit complete with connectors.	

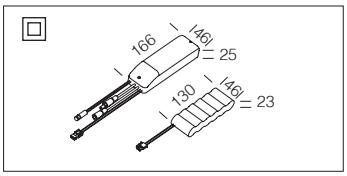



GENERAL CHARACTERISTICS

Rodi: recessed LED ceiling fixture with a very slender design and high-efficiency 3000K/4000K LED sources.

Housing and frame: housing in galvanised steel sheet, and frame in aluminium, contact mounting on the cross T structure.

Diffuser: in prismatic (for UGR<19 version) or opal (for UGR<22 version) engineering plastic with high thermal transmittance.

Wiring: rapid wring connection, the fixture does not need to be opened.

LED: luminous flux maintenance 90%: 80.000h (L90B10).
Power factor ≥0.95.
Photobiological safety class: exempt group.



Rodi offers a very bright and diffused lighting, while keeping energy consumptions extremely low and setting itself as the ideal solution for general and functional lighting applications

OTHER CHARACTERISTICS

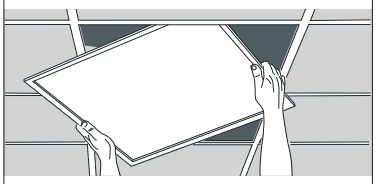

Rapid wiring connection, the fixture does not need to be opened, it can be easily embedded into a ceiling, and almost no need for maintenance.



Fixture complete with external driver. It can be easily installed in false ceilings.

DIMM DIG Standard version **CLD D-D (DALI)** wiring with **sub-code -0041:** thanks to pre-programmed settings or a software programme, this type of wiring allows accurate light emission dimming.

OTHER INFORMATION

UGR <19 / UGR <22 **The UGR** (unified glare rating) is an international unified measure developed by the CIE (Commission International de l'Eclairage) to assess the direct glare generated by a lighting system. The European standard regulating the lighting of indoor work places (**UNI-EN 12464-1**) recommends a specific UGR value for different applications ranging between **10 and 30**; **the lower the UGR value, the lower the glare**. The exact value of this index differs by project type because it depends on the position of the luminaires, room characteristics (dimensions, reflections) and on the point of observation of viewers.

LOW FLICKER Product with a very low flicker; uniform light for greater eye protection.

UPON REQUEST

Possibility of centralized lighting point control or via **external** presence/lighting sensors (see chapter *Lighting management systems and recommendations*).

-0050 EM-EC Version **CLD EC** wiring with **sub-code -0050:** permanently mounted fixture, operating in AC/DC mode, with centralized emergency device, not incorporated into the fixture.

CEILING MOUNTED INSTALLATION WITH ACC. 595 FRAME FOR RODI

acc. 595 frame 600x600 h70	
white	998035-00
Frame in white-coated aluminium; to be used for ceiling installation.	

acc. 595 frame 1200x600 h70	
white	998034-00
Frame in white-coated aluminium; to be used for ceiling installation.	



acc. 595 frame 1200x300 h70	
white	998036-00
Frame in white-coated aluminium; to be used for ceiling installation.	



1) Assembly the frame according to the following illustration (**fig.1**)

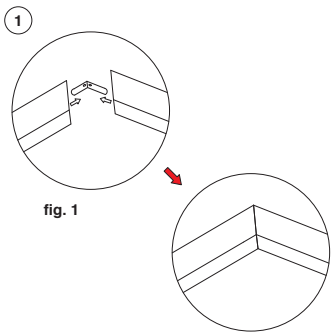

fig. 1

2) Installation
- Drill 4 holes at marking position with expansion screws and self-tapping screws (not screw too tight).
- Install the frame on the roof.
- Move and fix the ceiling frame (lift to right, or right to left) through hardy hole.
- Tighten self-tapping screws.
- Open the frame **B** on one side, insert the panel into the frame, then seal the frame with tightening screws.

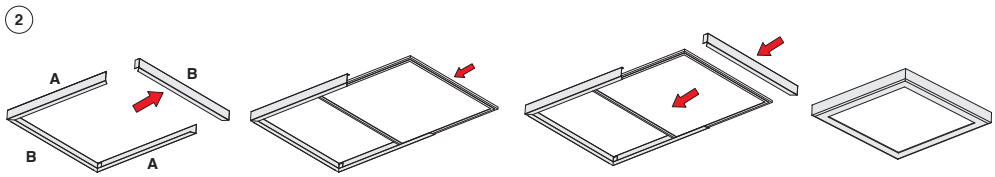

ACCESSORIES

acc. 320 safety cord
998004-00
Steel safety cord.

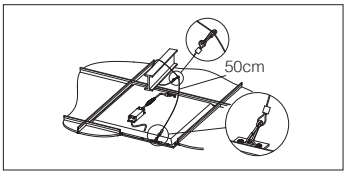

acc. 2520 simple suspension
994631-00
Suspension supplied with steel wire, and millimetric adjustment. Bag containing 2 pieces.

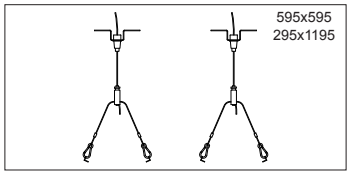

L90 B10 80.000h
RG0
U.V.
DIMM DIG
-0050 EM-EC
LOW FLICKER
UGR <19

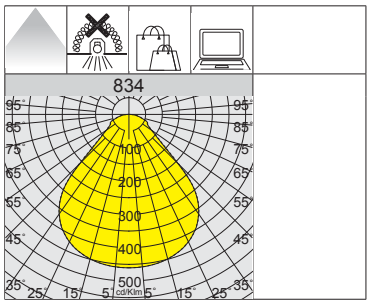

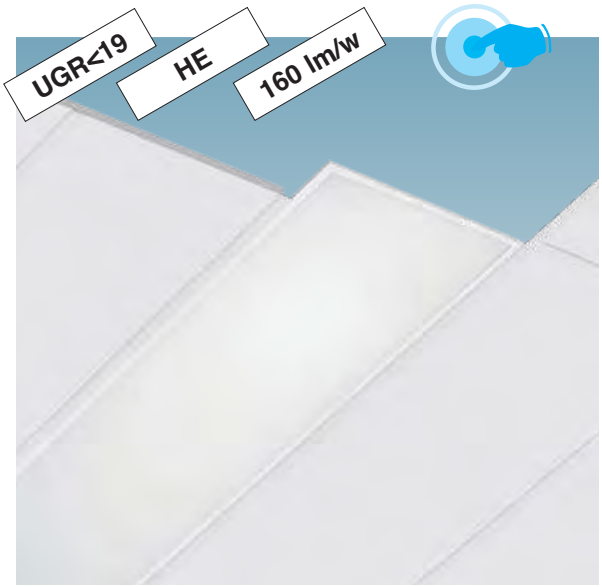

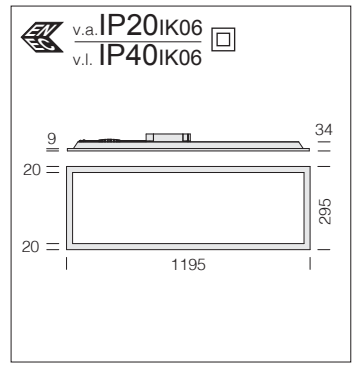

Upon request version with:
• emergency wiring with centralized power supply **CLD EC** with **sub-code -0050.**

834 Rodi R HE - HIGH EFFICIENCY - UGR<19 - DIP SWITCH

		CLD				LUMEN OUTPUT (tq= 25 °C)
LED	colour	weight	code	I out	W tot	K - ølm - CRI
LED	white	1.70	150253-00	**650**	**23**	4000K - 3700lm - CRI>80

		CLD D-D (DALI)			LUMEN OUTPUT (tq= 25 °C)
LED	colour	weight	code	W tot	K - ølm - CRI
LED	white	1.70	150253-0041	**23**	4000K - 3700lm - CRI>80
DALI version with the driver set to the maximum power of the DIP SWITCH version.					

DIP SWITCH SETTING	
	LUMEN OUTPUT (tq= 25 °C)
I out	W tot	K - ølm - CRI
500	**17**	4000K - 2800lm - CRI>80
550	**19**	4000K - 3100lm - CRI>80
600	**21**	4000K - 3400lm - CRI>80
650	***23***	*4000K - 3700lm - CRI>80*

L90 B10 80.000h
RG0
U.V.
DIMM DIG
-0050 EM-EC
LOW FLICKER
UGR <19

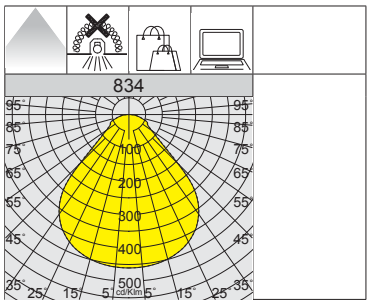



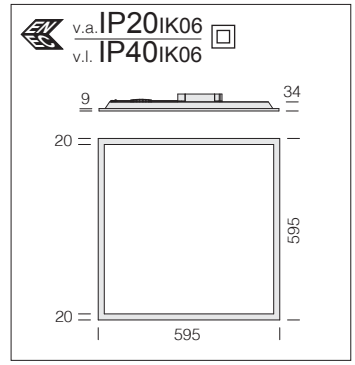

Upon request version with:
• emergency wiring with centralized power supply **CLD EC** with **sub-code -0050.**

834 Rodi HE - HIGH EFFICIENCY - UGR<19 - DIP SWITCH

		CLD				LUMEN OUTPUT (tq= 25 °C)
LED	colour	weight	code	I out	W tot	K - ølm - CRI
LED	white	1.30	150252-00	**650**	**23**	4000K - 3700lm - CRI>80

		CLD D-D (DALI)			LUMEN OUTPUT (tq= 25 °C)
LED	colour	weight	code	W tot	K - ølm - CRI
LED	white	1.30	150252-0041	**23**	4000K - 3700lm - CRI>80
DALI version with the driver set to the maximum power of the DIP SWITCH version.					

DIP SWITCH SETTING	
	LUMEN OUTPUT (tq= 25 °C)
I out	W tot	K - ølm - CRI
500	**17**	4000K - 2800lm - CRI>80
550	**19**	4000K - 3100lm - CRI>80
600	**21**	4000K - 3400lm - CRI>80
650	***23***	*4000K - 3700lm - CRI>80*

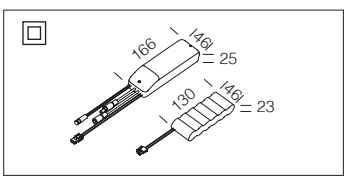

acc. 600 EM power kit	
1h	986604-00
3h	986604-31
EM (emergency) lamp power kit complete with connectors.	

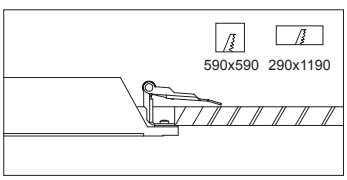

acc. 907 springs
998038-00
Springs for recessed non-surface mounting on plasterboard. Bag containing 4 pieces.

v.a. IP20 IK06
v.l. IP40 IK06

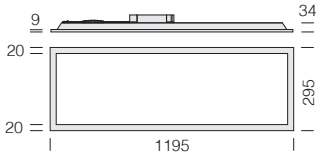

Upon request version with:
• emergency wiring with centralized power supply **CLD EC** with **sub-code -0050.**

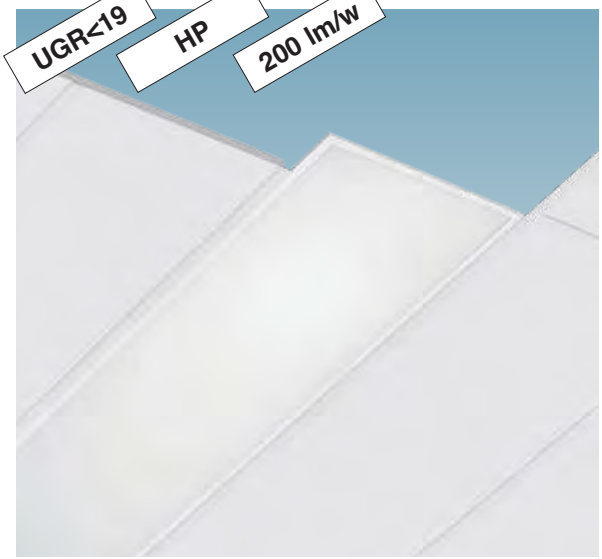

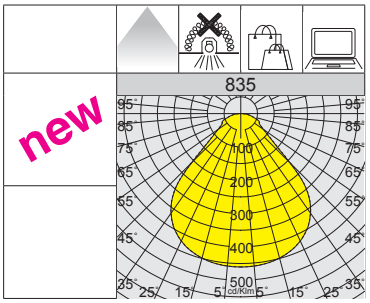

L90 B10 80.000h
RG0
U.V.
DIMM DIG
-0050 EM-EC
LOW FLICKER
UGR <19

835 Rodi R HP - HIGH PERFORMANCE - UGR<19							
		CLD			CLD D-D (DALI)		LUMEN OUTPUT (tq= 25 °C)
LED	colour	weight	L	code	code	W tot	K - ølm - CRI
LED	white	1.70	295x1195	150265-00	150265-0041	**20**	4000K - **4000lm** - CRI>80

v.a. IP20 IK06
v.l. IP40 IK06

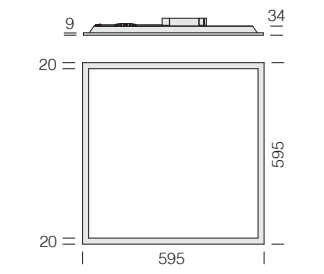

Upon request version with:
• emergency wiring with centralized power supply **CLD EC** with **sub-code -0050.**

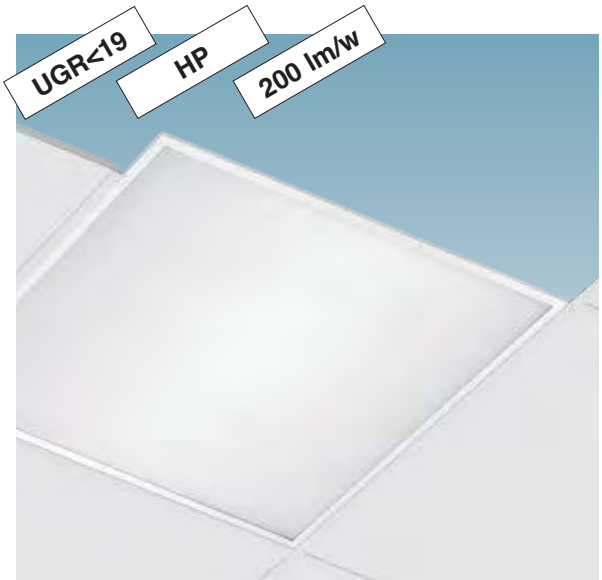

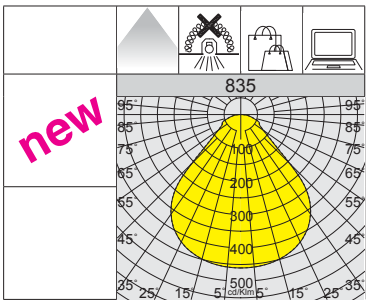

L90 B10 80.000h
RG0
U.V.
DIMM DIG
-0050 EM-EC
LOW FLICKER
UGR <19

835 Rodi HP - HIGH PERFORMANCE - UGR<19							
		CLD			CLD D-D (DALI)		LUMEN OUTPUT (tq= 25 °C)
LED	colour	weight	L	code	code	W tot	K - ølm - CRI
LED	white	1.30	595	150260-00	150260-0041	**20**	4000K - **4000lm** - CRI>80

acc. 907 springs

998038-00

Springs for recessed non-surface mounting on plasterboard. Bag containing 4 pieces.

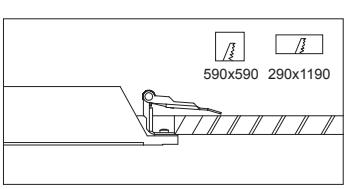

acc. 600 EM power kit

1h	986604-00
3h	986604-31

EM (emergency) lamp power kit complete with connectors.

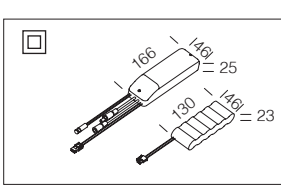

L90 B10 80.000h
RG0
U.V.
DIMM DIG
-0050 EM-EC
LOW FLICKER
UGR <19
3000K
4000K

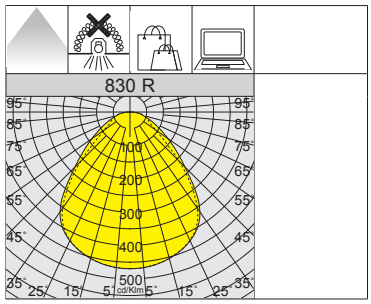

* art. 150244-00: no **UGR<19**

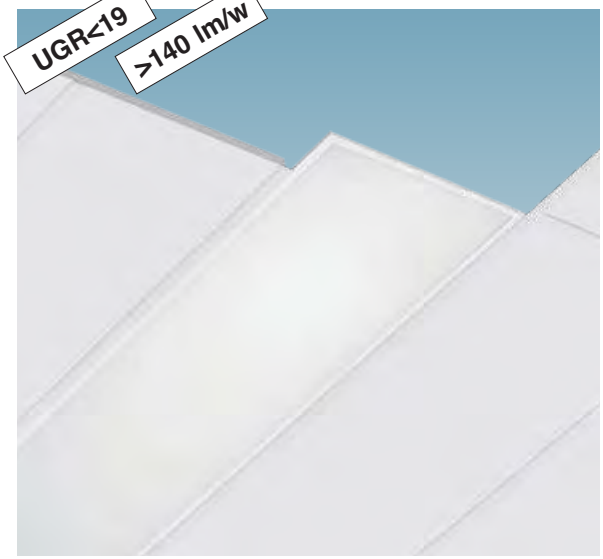

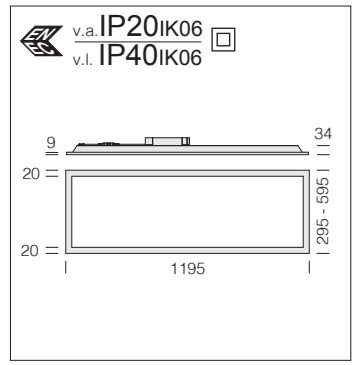

Upon request versions with:
• emergency wiring with centralized power supply **CLD EC** with **sub-code -0050.**

830 Rodi R - UGR<19

		CLD			CLD D-D (DALI)		LUMEN OUTPUT (tq= 25 °C)
LED	colour	weight	L	code	code	W tot	K - ølm - CRI
LED	white	1.70	295x1195	150243-00	150243-0041	**25**	4000K - 3640lm - CRI>80
				150243-39	150243-3941		3000K - 3458lm - CRI>80
		3.40	595x1195	150244-00		**52**	4000K - 7353lm - CRI>80

830 Rodi R HP - UGR<19

		CLD			CLD D-D (DALI)		LUMEN OUTPUT (tq= 25 °C)
LED	colour	weight	L	code	code	W tot	K - ølm - CRI
LED	white	1.70	295x1195	150246-00	150246-0041	**28**	4000K - 4050lm - CRI>80

L90 B10 80.000h
RG0
U.V.
DIMM DIG
-0050 EM-EC
LOW FLICKER
UGR <19
3000K
4000K

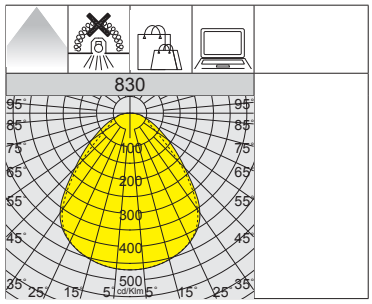

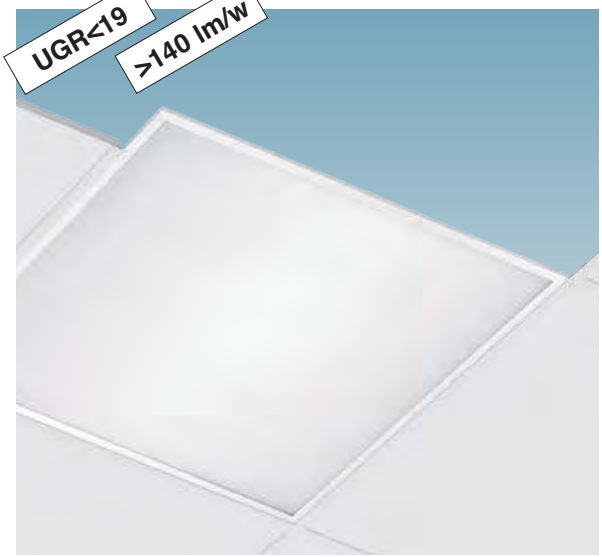

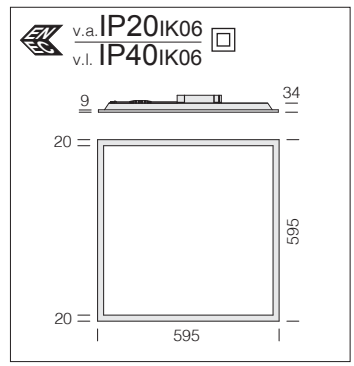

Upon request versions with:
• emergency wiring with centralized power supply **CLD EC** with **sub-code -0050.**

830 Rodi - UGR<19

		CLD			CLD D-D (DALI)		LUMEN OUTPUT (tq= 25 °C)
LED	colour	weight	L	code	code	W tot	K - ølm - CRI
LED	white	1.30	595	150242-00	150242-0041	**25**	4000K - 3640lm - CRI>80
				150242-39	150242-3941		3000K - 3458lm - CRI>80

830 Rodi HP - UGR<19

		CLD			CLD D-D (DALI)		LUMEN OUTPUT (tq= 25 °C)
LED	colour	weight	L	code	code	W tot	K - ølm - CRI
LED	white	1.30	595	150245-00	150245-0041	**28**	4000K - 4050lm - CRI>80

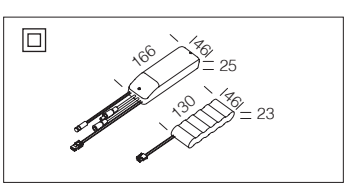

acc. 600 EM power kit

1h	986604-00
3h	986604-31

EM (emergency) lamp power kit complete with connectors.

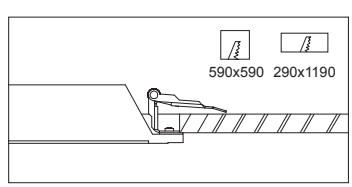

acc. 907 springs

998038-00

Springs for recessed non-surface mounting on plasterboard. Bag containing 4 pieces.

v.a. IP20 IK06
v.l. IP40 IK06

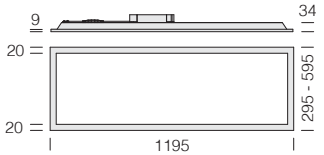

Upon request version with:
• emergency wiring with centralized power supply **CLD EC** with **sub-code -0050.**
• **CLD D-D (DALI)** wiring with **sub-code -0041.**

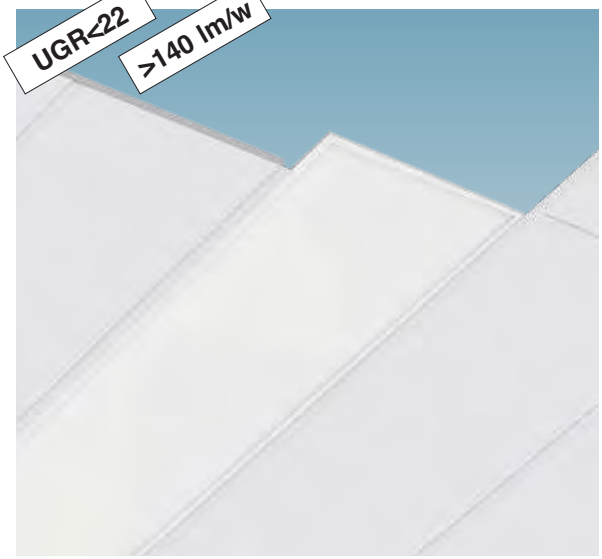

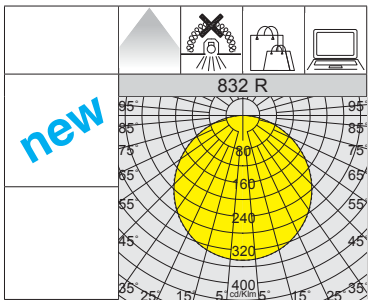

L90 B10 80.000h
RG0
U.V.
-0050 EM-EC
LOW FLICKER
UGR <22

832 Rodi R - UGR<22						
		CLD				LUMEN OUTPUT (tq= 25 °C)
LED	colour	weight	L	code	W tot	K - ølm - CRI
LED	white	1.70	295x1195	150233-00	**25**	4000K - 3710lm - CRI>80
		3.40	595x1195	150234-00	**52**	4000K - 7710lm - CRI>80

832 Rodi HP R - UGR<22						
		CLD				LUMEN OUTPUT (tq= 25 °C)
LED	colore	weight	L	code	W tot	K - ølm - CRI
LED	bianco	1.70	295x1195	150238-00	**28**	4000K - **4464lm** - CRI>80

v.a. IP20 IK06
v.l. IP40 IK06

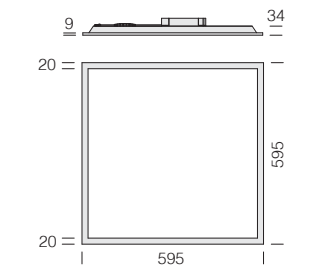

Upon request version with:
• emergency wiring with centralized power supply **CLD EC** with **sub-code -0050.**
• **CLD D-D (DALI)** wiring with **sub-code -0041.**

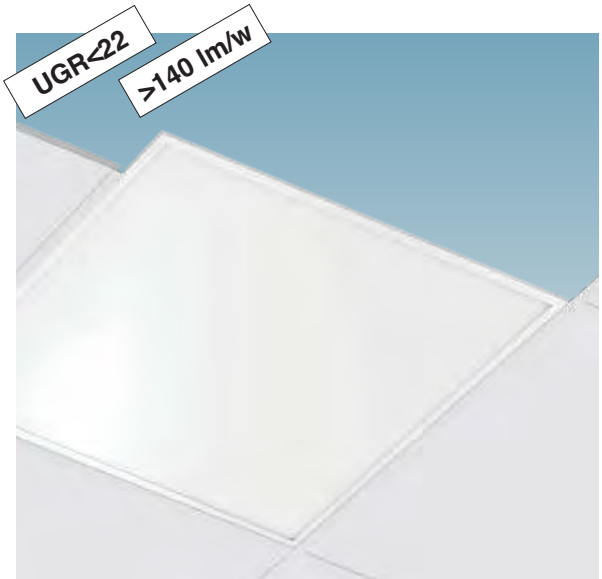

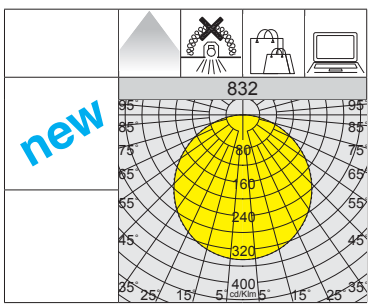

L90 B10 80.000h
RG0
U.V.
-0050 EM-EC
LOW FLICKER
UGR <22

832 Rodi - UGR<22						
		CLD				LUMEN OUTPUT (tq= 25 °C)
LED	colour	weight	L	code	W tot	K - ølm - CRI
LED	white	1.30	595	150232-00	**25**	4000K - 3710lm - CRI>80

832 Rodi HP - UGR<22						
		CLD				LUMEN OUTPUT (tq= 25 °C)
LED	colour	weight	L	code	W tot	K - ølm - CRI
LED	white	1.30	595	150235-00	**28**	4000K - **4464lm** - CRI>80

acc. 907 springs
998038-00
Springs for recessed non-surface mounting on plasterboard. Bag containing 4 pieces.

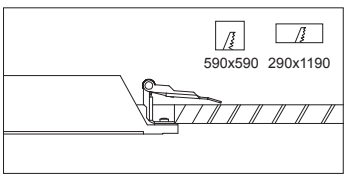

acc. 600 EM power kit	
1h	986604-00
3h	986604-31
EM (emergency) lamp power kit complete with connectors.	

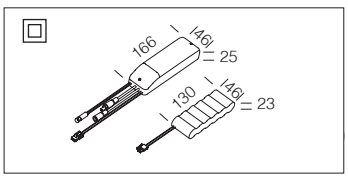



v.a. IP20 IK06
v.l. IP65 IK06

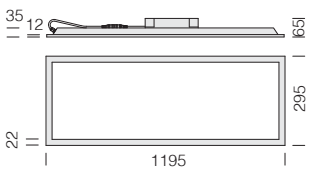

Upon request versions with:
• emergency wiring with centralized power supply **CLD EC** with **sub-code -0050.**

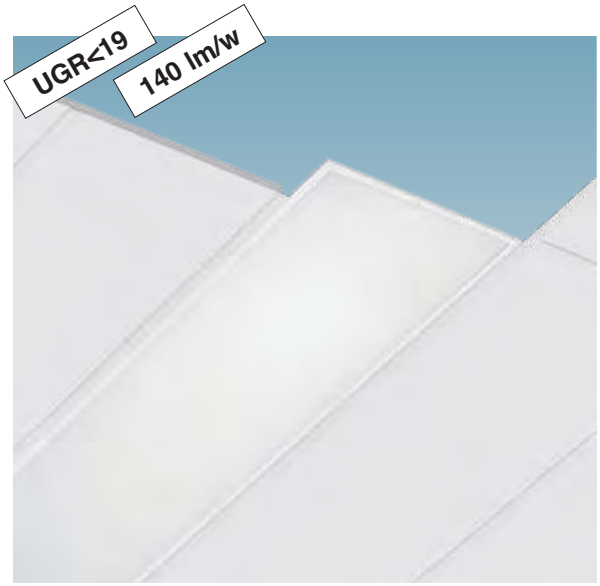

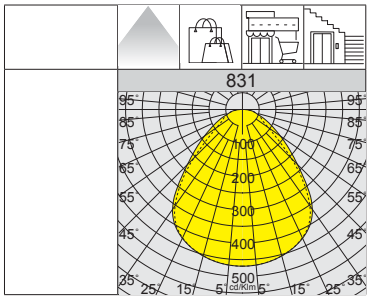

L90 B10 80.000h
RG0
U.V.
-0050 EM-EC
DIMM DIG
LOW FLICKER

831 Rodi R IP65 - UGR<19							
		CLD			CLD D-D (DALI)		LUMEN OUTPUT (tq= 25 °C)
LED	colour	weight	L	code	code	W tot	K - ølm - CRI
LED	white	2.00	295x1195	150237-00	150237-0041	**24**	4000K - 3360lm - CRI>80

v.a. IP20 IK06
v.l. IP65 IK06

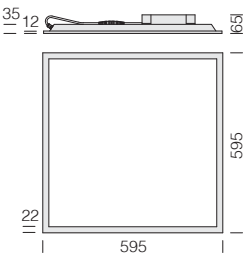

Upon request versions with:
• emergency wiring with centralized power supply **CLD EC** with **sub-code -0050.**



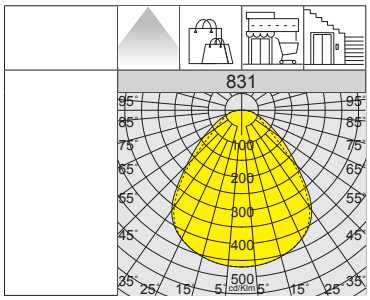

L90 B10 80.000h
RG0
U.V.
-0050 EM-EC
DIMM DIG
LOW FLICKER
3000K
4000K

831 Rodi IP65 - UGR<19							
		CLD			CLD D-D (DALI)		LUMEN OUTPUT (tq= 25 °C)
LED	colour	weight	L	code	code	W tot	K - ølm - CRI
LED	white	1.90	595	150232-00002264	150232-00412264	**24**	4000K - 3360lm - CRI>80
				150232-39002264	150232-39412264		3000K - 3160lm - CRI>80

acc. 320 safety cord
998004-00
Steel safety cord.

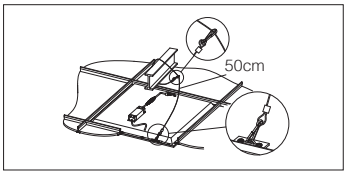

acc. 600 EM power kit	
1h	986604-00
3h	986604-31
EM (emergency) lamp power kit complete with connectors.	

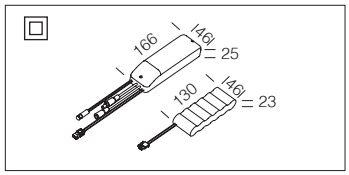



GENERAL CHARACTERISTICS

Housing: self-extinguishing injection-moulded polycarbonate in RAL 9016 colour. Gear box in white-coated 7/10 thickness steel sheet.

Optics: secondary lenses in PMMA with high transparency and non-yellowing properties, and two photometric distributions with wide and middle beam angles.

UGR glare index: UGR<16 - UGR<19 - EN 12464.

LED: power factor ≥0.9.
Luminous flux maintenance 90% 100.000h (L90B10).
Photobiological safety class: exempt group.

LOW FLICKER

Product with a very low flicker; uniform light for greater eye protection.

OTHER CHARACTERISTICS

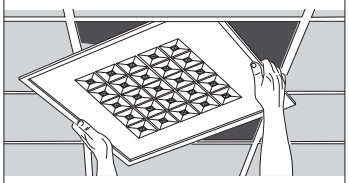

Rapid wiring connection, the fixture does not need to be opened, it can be easily embedded into a ceiling, and almost no need for maintenance.

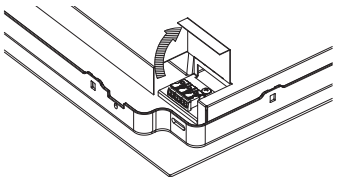

Easy connection
Equipped with hinged door and quick clamping mechanism.

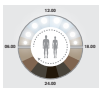

Comfortsquare is available in Tunable White and HCL version (For more info, go to www.disano.it).

OTHER INFORMATION



Fixture with a thin design and lenticular optics, ideal in environments that require a controlled lighting distribution and maximum visual comfort (UGR<16 - UGR<19).

UGR <16

UGR <19

The UGR (unified glare rating) is an international unified measure developed by the CIE (Commission International de l'Eclairage) to assess the direct glare generated by a lighting system. The European standard regulating the lighting of indoor work places (**UNI-EN 12464-1**) recommends a specific UGR value for different applications ranging between **10 and 30**; **the lower the UGR value, the lower the glare**. The exact value of this index differs by project type because it depends on the position of the luminaires, room characteristics (dimensions, reflections) and on the point of observation of viewers.

UPON REQUEST

Possibility of centralized lighting point control or via **external** presence/lighting sensors (see chapter *Lighting management systems and recommendations*).

DIMM DIG

Version **CLD D-D (DALI)** wiring with **sub-code -0041:** thanks to pre-programmed settings or a software programme, this type of wiring allows accurate light emission dimming.

PUSH DIG

Version **CLD D-D (PUSH)** wiring with **sub-code -0045:** it is possible to create lighting systems that can be easily switched ON/OFF and dimmed at low costs using conventional mains voltage push-buttons for lighting control.

CHARACTERISTICS AND FUNCTIONS OF COMFORTSQUARE WITH BUILT-IN PRESENCE AND LIGHTING SENSOR

Built-in RADAR SENSOR (sub-code -19): an electronic device that immediately detects any presence entering its range. When the sensor reads motion inside its range, lights will stay on. When it no longer senses motion and based on the lighting level in its range, the sensor will turn off the lights after a pre-programmed time.

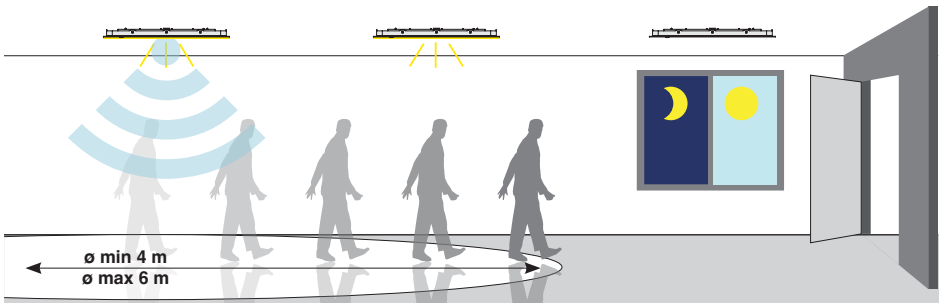

SENSOR - TECHNICAL SPECIFICATIONS	
Detection area	75%
Detection distance	Ø 4-6 m (adjustable)
Hold time	1 min
Ambient light	Disable
Power consumption	~ 0,9 W
Microwave frequency/power	5.8GHz / <0.3mW
Operating temperature	-25°C ÷ 60°C

The remote control (code **81418618**) is to be purchased separately at an additional cost. It allows changing parameters after installation without the need to access the device directly.

EXAMPLE OF INSTALLATION WITH EXTERNAL PRESENCE AND LIGHTING SENSOR

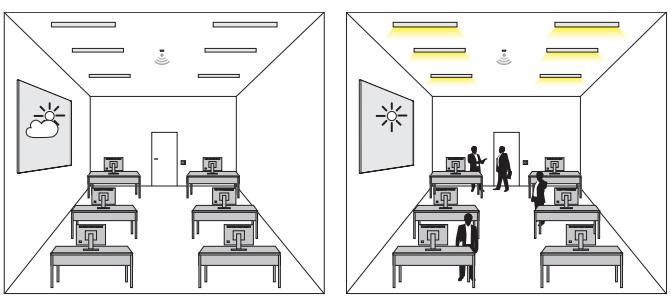

The presence detector adjusts the lights to a preset lighting value based on the people occupying a room and the amount of light at that moment. The integrated lighting sensor constantly measures the level of luminosity in the room and compares this value with the value set by the presence detector. The DIMM **DALI** versions of Comfortsquare can be used with the presence detector by ordering with **subcode -0041**.

WHAT TO ORDER:
KIT 1 - example of installation in offices with:
- 6 pcs - art. 710 Comfortsquare (140310-0041)
- 1 pcs - MASTER HF DALI sensor (986629-00)
- 1 pcs - RC8 remote control (986633-00)

For further information see chapter Lighting management systems and recommendations.

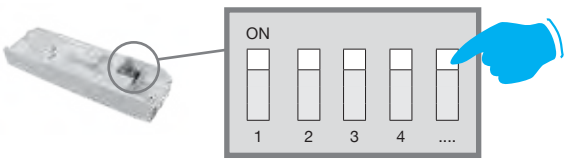

ADAPT THE CURRENT TO ACHIEVE OPTIMAL LUMINOUS FLUX

DIP SWITCH SETTING: the fixture comes with a *DIP SWITCH* driver for **THE SETTING OF THE OUTPUT CURRENT**. In this way you, can **ENSURE THE BEST LUMINOUS FLUX** for any lighting design.

The possibility to choose the correct drive current for LEDs will allow you to have the right power under specific design conditions. Using a lower current will improve the efficiency of fixtures and therefore increase energy savings, whilst a higher current will result in a higher light flux so that you can reduce the number of fixtures.



CEILING MOUNTED INSTALLATION WITH ACC. 595 FRAME FOR COMFORTSQUARE LED



acc. 595 frame 600x600 h70	
white	998035-00
Frame in white-coated aluminium; to be used for ceiling installation of Comfortsquare LED.	

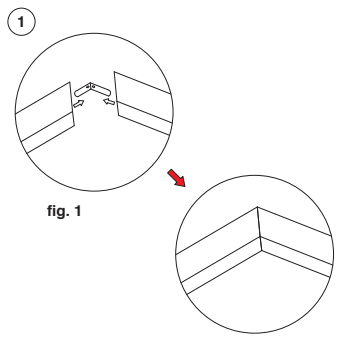

fig. 1

1) Assembly the frame according to the following illustration (**fig.1**)

2) Installation
- Drill 4 holes at marking position with expansion screws and self-tapping screws (not screw too tight).
- Install the frame on the roof.
- Move and fix the ceiling frame (lift to right, or right to left) through hardy hole.
- Tighten self-tapping screws.
- Open the frame **B** on one side, insert the panel into the frame, then seal the frame with tightening screws.

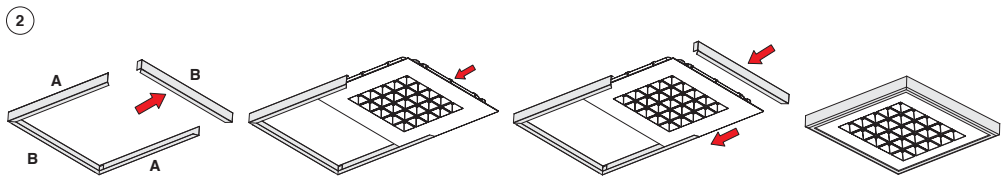

ACCESSORIES

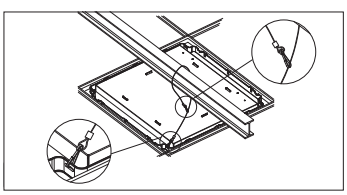

acc. 320 safety cord
998004-00
Steel safety cord.

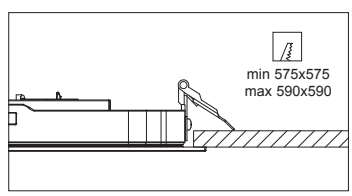

acc. 907 springs
998038-00
Springs for recessed non-surface mounting on plasterboard. Bag containing 4 pieces.

v.a. IP20IK07
v.l. IP43IK07

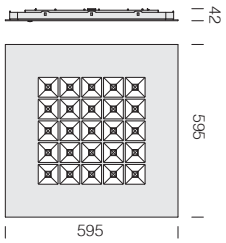



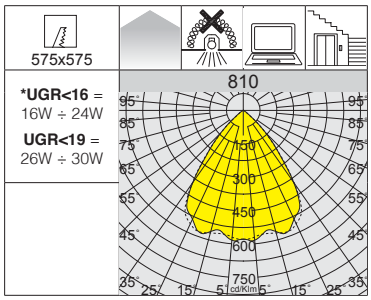

L90 B10 100.000h

RG0

LOW FLICKER

UGR <16

UGR <19

3000K

4000K

Upon request version with:
- **CLD D-D (DALI)** wiring with **sub-code -0041.**
- **CLD D-D (PUSH)** wiring with **sub-code -0045.**

DIP SWITCH SETTING		
		LUMEN OUTPUT (tq= 25 °C)
I out	W tot	K - ølm - CRI - degrees
550	16	4000K - 1921lm - **CRI 90** - 76°
650	19	4000K - 2274m - **CRI 90** - 76°
750	***21***	*4000K - 2624lm - **CRI 90** - 76°*
850	24	4000K - 2970lm - **CRI 90** - 76°
900	26	4000K - 3142lm - **CRI 90** - 76°
950	27	4000K - 3314lm - **CRI 90** - 76°
1000	28	4000K - 3484lm - **CRI 90** - 76°
1050	30	4000K - 3654lm - **CRI 90** - 76°

DIP SWITCH SETTING		
		LUMEN OUTPUT (tq= 25 °C)
I out	W tot	K - ølm - CRI - degrees
550	16	3000K - 1921lm - **CRI 90** - 76°
650	19	3000K - 2274m - **CRI 90** - 76°
750	***21***	*3000K - 2624lm - **CRI 90**- 76°*
850	24	3000K - 2970lm - **CRI 90** - 76°
900	26	3000K - 3142lm - **CRI 90** - 76°
950	27	3000K - 3314lm - **CRI 90** - 76°
1000	28	3000K - 3484lm - **CRI 90** - 76°
1050	30	3000K - 3654lm - **CRI 90** - 76°

810 Comfortsquare - DIP SWITCH - 76° beam

		CLD				LUMEN OUTPUT (tq= 25 °C)
LED	colour	weight	code	I out	W tot	K - ølm - CRI - degrees
LED	white	4.00	150340-00	***750***	**21**	4000K - 2624lm - **CRI 90** - 76°
			150340-39			3000K - 2624lm - **CRI 90** - 76°
LED	white	4.00	150340-19	***750***	**21**	4000K - 2624lm - **CRI 90** - 76°
			150340-1928			3000K - 2624lm - **CRI 90** - 76°

The standard version of Comfortsquare with subcode **-19** has a presence/lighting sensor that switches the lamp on or off whenever it detects somebody in the room and according to the amount of light inside the room.

v.a. IP20IK07
v.l. IP43IK07

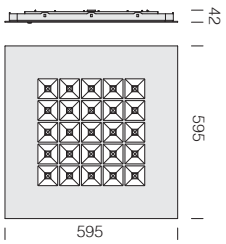

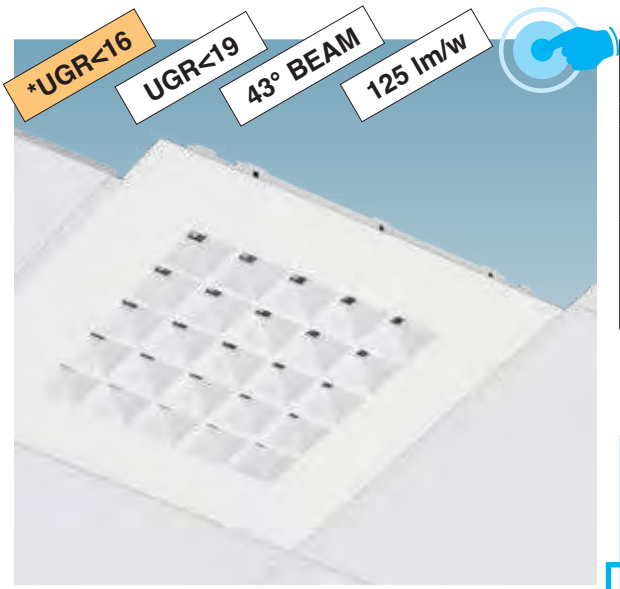

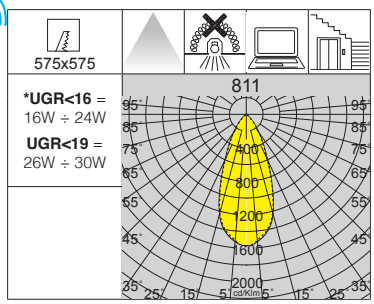

L90 B10 100.000h

RG0

LOW FLICKER

UGR <16

UGR <19

3000K

4000K

Upon request version with:
- **CLD D-D (DALI)** wiring with **sub-code -0041.**
- **CLD D-D (PUSH)** wiring with **sub-code -0045.**

DIP SWITCH SETTING		
		LUMEN OUTPUT (tq= 25 °C)
I out	W tot	K - ølm - CRI - degrees
550	16	4000K - 1909lm - **CRI 90** - 43°
650	19	4000K - 2259lm - **CRI 90** - 43°
750	***21***	*4000K - 2607lm - **CRI 90** - 43°*
850	24	4000K - 2951lm - **CRI 90** - 43°
900	26	4000K - 3122lm - **CRI 90** - 43°
950	27	4000K - 3292lm - **CRI 90** - 43°
1000	28	4000K - 3462lm - **CRI 90** - 43°
1050	30	4000K - 3630lm - **CRI 90** - 43°

DIP SWITCH SETTING		
		LUMEN OUTPUT (tq= 25 °C)
I out	W tot	K - ølm - CRI - degrees
550	16	3000K - 1909lm - **CRI 90** - 43°
650	19	3000K - 2259lm - **CRI 90** - 43°
750	***21***	*3000K - 2607lm - **CRI 90** - 43°*
850	24	3000K - 2951lm - **CRI 90** - 43°
900	26	3000K - 3122lm - **CRI 90** - 43°
950	27	3000K - 3292lm - **CRI 90** - 43°
1000	28	3000K - 3462lm - **CRI 90** - 43°
1050	30	3000K - 3630lm - **CRI 90** - 43°

811 Comfortsquare - DIP SWITCH - 43° beam

		CLD				LUMEN OUTPUT (tq= 25 °C)
LED	colour	weight	code	I out	W tot	K - ølm - CRI - degrees
LED	white	4.00	150350-00	***750***	**21**	4000K - 2607lm - **CRI 90** - 43°
			150350-39			3000K - 2607lm - **CRI 90** - 43°
LED	white	4.00	150350-19	***750***	**21**	4000K - 2607lm - **CRI 90** - 43°
			150350-1928			3000K - 2607lm - **CRI 90** - 43°

The standard version of Comfortsquare with subcode **-19** has a presence/lighting sensor that switches the lamp on or off whenever it detects somebody in the room and according to the amount of light inside the room.

acc. 600 EM power kit	
1h	986604-00
3h	986604-31
EM (emergency) lamp power kit complete with connectors.	

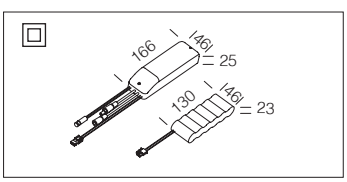



L90 B10 100.000h

RG0

LOW FLICKER

UGR <16

UGR <19

3000K

4000K

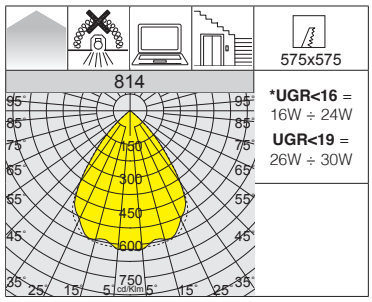



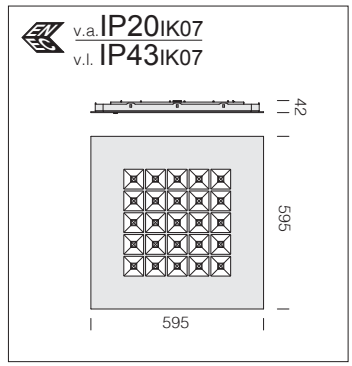

Upon request version with:
- **CLD D-D (DALI)** wiring with **sub-code -0041.**
- **CLD D-D (PUSH)** wiring with **sub-code -0045.**

814 Comfortsquare - DIP SWITCH - 76° beam						
		CLD				LUMEN OUTPUT (tq= 25 °C)
LED	colour	weight	code	I out	W tot	K - ølm - CRI - degrees
LED	white/silver	4.00	150360-00	***750***	**21**	4000K - 2643lm - **CRI 90** - 76°
			150360-39			3000K - 2643lm - **CRI 90** - 76°
LED	white/silver	4.00	150360-19	***750***	**21**	4000K - 2643lm - **CRI 90** - 76°
			150360-1928			3000K - 2643lm - **CRI 90** - 76°
The standard version of Comfortsquare with subcode **-19** has a presence/lighting sensor that switches the lamp on or off whenever it detects somebody in the room and according to the amount of light inside the room.						

DIP SWITCH SETTING		
		LUMEN OUTPUT (tq= 25 °C)
I out	W tot	K - ølm - CRI - degrees
550	16	4000K - 1935lm - **CRI 90** - 76°
650	19	4000K - 2290lm - **CRI 90** - 76°
750	***21***	*4000K - 2643lm - **CRI 90** - 76°*
850	24	4000K - 2992lm - **CRI 90** - 76°
900	26	4000K - 3165lm - **CRI 90** - 76°
950	27	4000K - 3338lm - **CRI 90** - 76°
1000	28	4000K - 3510lm - **CRI 90** - 76°
1050	30	4000K - 3681lm - **CRI 90** - 76°

DIP SWITCH SETTING		
		LUMEN OUTPUT (tq= 25 °C)
I out	W tot	K - ølm - CRI - degrees
550	16	3000K - 1935lm - **CRI 90** - 76°
650	19	3000K - 2290lm - **CRI 90** - 76°
750	***21***	*3000K - 2643lm - **CRI 90** - 76°*
850	24	3000K - 2992lm - **CRI 90** - 76°
900	26	3000K - 3165lm - **CRI 90** - 76°
950	27	3000K - 3338lm - **CRI 90** - 76°
1000	28	3000K - 3510lm - **CRI 90** - 76°
1050	30	3000K - 3681lm - **CRI 90** - 76°

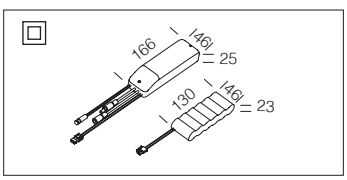

acc. 600 EM power kit	
1h	986604-00
3h	986604-31
EM (emergency) lamp power kit complete with connectors.	

v.a. IP20IK07
v.l. IP43IK07

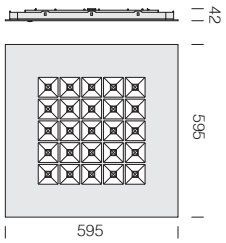

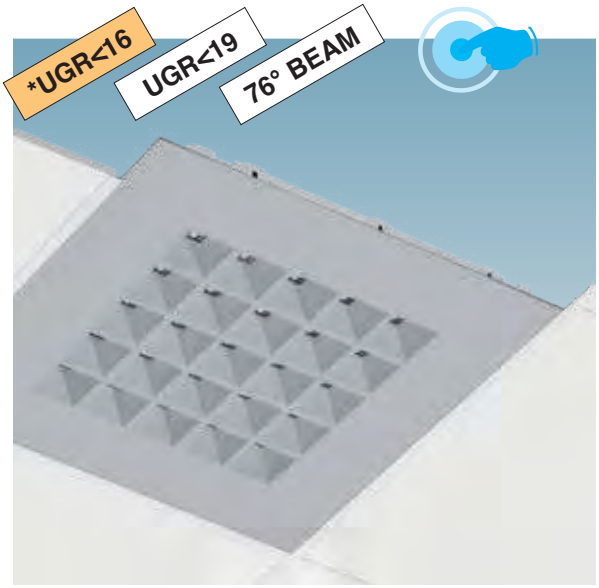

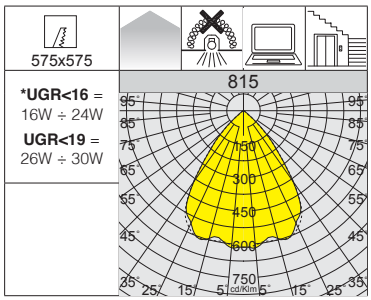

L90 B10 100.000h
RG0
LOW FLICKER
UGR <16
UGR <19
3000K
4000K

Upon request version with:
- **CLD D-D (DALI)** wiring with **sub-code -0041.**
- **CLD D-D (PUSH)** wiring with **sub-code -0045.**

DIP SWITCH SETTING		
		LUMEN OUTPUT (tq= 25 °C)
I out	W tot	K - ølm - CRI - degrees
550	16	4000K - 1935lm - **CRI 90** - 76°
650	19	4000K - 2290lm - **CRI 90** - 76°
750	***21***	*4000K - 2643lm - **CRI 90** - 76°*
850	24	4000K - 2992lm - **CRI 90** - 76°
900	26	4000K - 3165lm - **CRI 90** - 76°
950	27	4000K - 3338lm - **CRI 90** - 76°
1000	28	4000K - 3510lm - **CRI 90** - 76°
1050	30	4000K - 3681lm - **CRI 90** - 76°

DIP SWITCH SETTING		
		LUMEN OUTPUT (tq= 25 °C)
I out	W tot	K - ølm - CRI - degrees
550	16	3000K - 1935lm - **CRI 90** - 76°
650	19	3000K - 2290lm - **CRI 90** - 76°
750	***21***	*3000K - 2643lm - **CRI 90** - 76°*
850	24	3000K - 2992lm - **CRI 90** - 76°
900	26	3000K - 3165lm - **CRI 90** - 76°
950	27	3000K - 3338lm - **CRI 90** - 76°
1000	28	3000K - 3510lm - **CRI 90** - 76°
1050	30	3000K - 3681lm - **CRI 90** - 76°

815 Comfortsquare - DIP SWITCH - 76° beam

		CLD				LUMEN OUTPUT (tq= 25 °C)
LED	colour	weight	code	I out	W tot	K - ølm - CRI - degrees
LED	RAL 9006	4.00	150370-00	***750***	**21**	4000K - 2643lm - **CRI 90** - 76°
			150370-39			3000K - 2643lm - **CRI 90** - 76°
LED	RAL 9006	4.00	150370-19	***750***	**21**	4000K - 2643lm - **CRI 90** - 76°
			150370-1928			3000K - 2643lm - **CRI 90** - 76°

The standard version of Comfortsquare with subcode **-19** has a presence/lighting sensor that switches the lamp on or off whenever it detects somebody in the room and according to the amount of light inside the room.

v.a. IP20IK07
v.l. IP43IK07

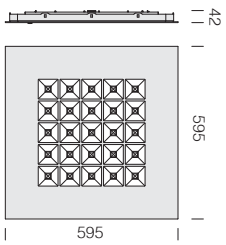



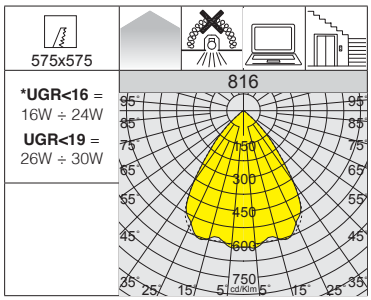

L90 B10 100.000h
RG0
LOW FLICKER
UGR <16
UGR <19
3000K
4000K

Upon request version with:
- **CLD D-D (DALI)** wiring with **sub-code -0041.**
- **CLD D-D (PUSH)** wiring with **sub-code -0045.**

DIP SWITCH SETTING		
		LUMEN OUTPUT (tq= 25 °C)
I out	W tot	K - ølm - CRI - degrees
550	16	4000K - 1355lm - **CRI 90** - 76°
650	19	4000K - 1603lm - **CRI 90** - 76°
750	***21***	*4000K - 1850lm - **CRI 90** - 76°*
850	24	4000K - 2094lm - **CRI 90** - 76°
900	26	4000K - 2215lm - **CRI 90** - 76°
950	27	4000K - 2337lm - **CRI 90** - 76°
1000	28	4000K - 2457lm - **CRI 90** - 76°
1050	30	4000K - 2577lm - **CRI 90** - 76°

DIP SWITCH SETTING		
		LUMEN OUTPUT (tq= 25 °C)
I out	W tot	K - ølm - CRI - degrees
550	16	3000K - 1355lm - **CRI 90** - 76°
650	19	3000K - 1603lm - **CRI 90** - 76°
750	***21***	*3000K - 1850lm - **CRI 90** - 76°*
850	24	3000K - 2094lm - **CRI 90** - 76°
900	26	3000K - 2215lm - **CRI 90** - 76°
950	27	3000K - 2337lm - **CRI 90** - 76°
1000	28	3000K - 2457lm - **CRI 90** - 76°
1050	30	3000K - 2577lm - **CRI 90** - 76°

816 Comfortsquare - DIP SWITCH - 76° beam

		CLD				LUMEN OUTPUT (tq= 25 °C)
LED	colour	weight	code	I out	W tot	K - ølm - CRI - degrees
LED	RAL 9005	4.00	150371-00	***750***	**21**	4000K - 1850lm - **CRI 90** - 76°
			150371-39			3000K - 1850lm - **CRI 90** - 76°
LED	RAL 9005	4.00	150371-19	***750***	**21**	4000K - 1850lm - **CRI 90** - 76°
			150371-1928			3000K - 1850lm - **CRI 90** - 76°

The standard version of Comfortsquare with subcode **-19** has a presence/lighting sensor that switches the lamp on or off whenever it detects somebody in the room and according to the amount of light inside the room.

acc. 600 EM power kit	
1h	986604-00
3h	986604-31
EM (emergency) lamp power kit complete with connectors.	

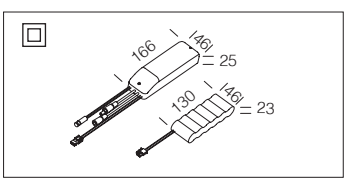



Upon request: versions available in different colours and surface finishes to coordinate with any architectural design.



CS - A



CS - B



CS - C



CS - D



CS - H

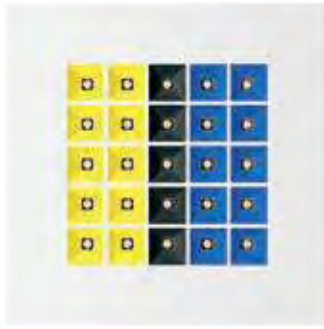

CS - G

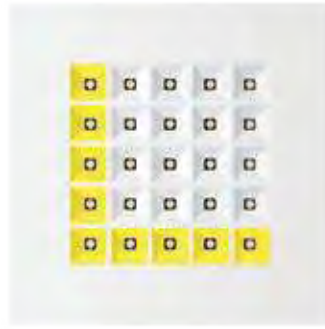

CS - F



CS - E

v.a. IP20 IK07
v.l. IP43 IK07

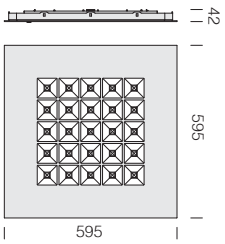

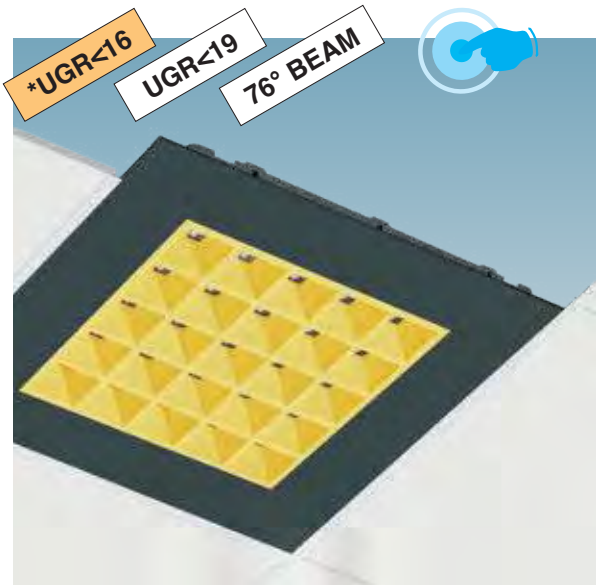

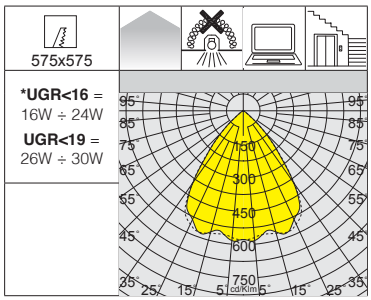

L90 B10 100.000h
RG0
LOW FLICKER
UGR <16
UGR <19
3000K
4000K

version	4000K	3000K
ON-OFF	-00	-39
DALI	-0041	-3941
SENSOR	-19	-1928

Comfortsquare - DIP SWITCH - 76° beam

		CLD				LUMEN OUTPUT (tq= 25 °C)
LED	colour	weight	code	I out	W tot	K - ølm - CRI - degrees
LED	black/gold	4.00	GOLD-00	***750***	**21**	4000K - 2643lm - **CRI 90** - 76°
			GOLD-39			3000K - 2643lm - **CRI 90** - 76°
LED	black/gold	4.00	GOLD-0041	***750***	**21**	4000K - 2643lm - **CRI 90** - 76°
			GOLD-3941			3000K - 2643lm - **CRI 90** - 76°
LED	black/gold	4.00	GOLD-19	***750***	**21**	4000K - 2643lm - **CRI 90** - 76°
			GOLD-1928			3000K - 2643lm - **CRI 90** - 76°

The standard version of Comfortsquare with subcode **-19** has a presence/lighting sensor that switches the lamp on or off whenever it detects somebody in the room and according to the amount of light inside the room.

DIP SWITCH SETTING

		LUMEN OUTPUT (tq= 25 °C)
I out	W tot	K - ølm - CRI - degrees
550	16	4000K - 1935lm - **CRI 90** - 76°
650	19	4000K - 2290lm - **CRI 90** - 76°
750	***21***	*4000K - 2643lm - **CRI 90** - 76°*
850	24	4000K - 2992lm - **CRI 90** - 76°
900	26	4000K - 3165lm - **CRI 90** - 76°
950	27	4000K - 3338lm - **CRI 90** - 76°
1000	28	4000K - 3510lm - **CRI 90** - 76°
1050	30	4000K - 3681lm - **CRI 90** - 76°

DIP SWITCH SETTING

		LUMEN OUTPUT (tq= 25 °C)
I out	W tot	K - ølm - CRI - degrees
550	16	3000K - 1935lm - **CRI 90** - 76°
650	19	3000K - 2290lm - **CRI 90** - 76°
750	***21***	*3000K - 2643lm - **CRI 90** - 76°*
850	24	3000K - 2992lm - **CRI 90** - 76°
900	26	3000K - 3165lm - **CRI 90** - 76°
950	27	3000K - 3338lm - **CRI 90** - 76°
1000	28	3000K - 3510lm - **CRI 90** - 76°
1050	30	3000K - 3681lm - **CRI 90** - 76°

v.a. IP20 IK07
v.l. IP43 IK07

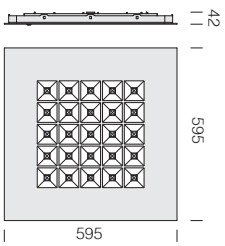



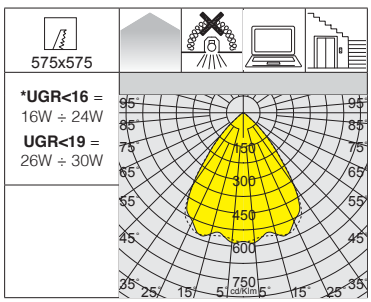

L90 B10 100.000h
RG0
LOW FLICKER
UGR <16
UGR <19
3000K
4000K

version	4000K	3000K
ON-OFF	-00	-39
DALI	-0041	-3941
SENSOR	-19	-1928

Comfortsquare - DIP SWITCH - 76° beam

		CLD				LUMEN OUTPUT (tq= 25 °C)
LED	colour	weight	code	I out	W tot	K - ølm - CRI - degrees
LED	black/silver	4.00	SILVER-00	***750***	**21**	4000K - 2643lm - **CRI 90** - 76°
			SILVER-39			3000K - 2643lm - **CRI 90** - 76°
LED	black/silver	4.00	SILVER-0041	***750***	**21**	4000K - 2643lm - **CRI 90** - 76°
			SILVER-3941			3000K - 2643lm - **CRI 90** - 76°
LED	black/silver	4.00	SILVER-19	***750***	**21**	4000K - 2643lm - **CRI 90** - 76°
			SILVER-1928			3000K - 2643lm - **CRI 90** - 76°

The standard version of Comfortsquare with subcode **-19** has a presence/lighting sensor that switches the lamp on or off whenever it detects somebody in the room and according to the amount of light inside the room.

DIP SWITCH SETTING

		LUMEN OUTPUT (tq= 25 °C)
I out	W tot	K - ølm - CRI - degrees
550	16	4000K - 1935lm - **CRI 90** - 76°
650	19	4000K - 2290lm - **CRI 90** - 76°
750	***21***	*4000K - 2643lm - **CRI 90** - 76°*
850	24	4000K - 2992lm - **CRI 90** - 76°
900	26	4000K - 3165lm - **CRI 90** - 76°
950	27	4000K - 3338lm - **CRI 90** - 76°
1000	28	4000K - 3510lm - **CRI 90** - 76°
1050	30	4000K - 3681lm - **CRI 90** - 76°

DIP SWITCH SETTING

		LUMEN OUTPUT (tq= 25 °C)
I out	W tot	K - ølm - CRI - degrees
550	16	3000K - 1935lm - **CRI 90** - 76°
650	19	3000K - 2290lm - **CRI 90** - 76°
750	***21***	*3000K - 2643lm - **CRI 90** - 76°*
850	24	3000K - 2992lm - **CRI 90** - 76°
900	26	3000K - 3165lm - **CRI 90** - 76°
950	27	3000K - 3338lm - **CRI 90** - 76°
1000	28	3000K - 3510lm - **CRI 90** - 76°
1050	30	3000K - 3681lm - **CRI 90** - 76°

acc. 600 EM power kit	
1h	986604-00
3h	986604-31
EM (emergency) lamp power kit complete with connectors.	

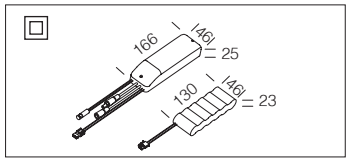



GENERAL CHARACTERISTICS

Housing: in galvanised steel sheet panels, pre-coated with a polyester resin.

Dark light louvre: double parabolic louvres, in high-gloss 99.99 aluminium, anti-glare and anti-iridescence, very low luminance, PVD treatment to improve luminous efficiency.

Equipment: supplied without brackets: for non-surface mounted versions, use bracket acc. 326.
Driver can work also with **DC198-264V** so that the ceiling lamp can be used as an emergency fixture with centralized power supply

LED: power factor: 0,95.
Luminous flux maintenance 80%: 80.000h (L80B10).
Luminous flux maintenance 90%: 50.000h (L90B10).
Colour temperature: 4000 K
(Upon request: 3000K).

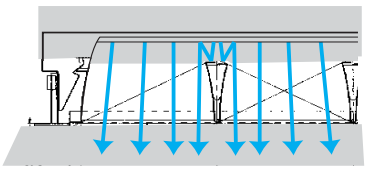

Optical with flow recovery

OTHER CHARACTERISTICS



Easy connection
Equipped with hinged door and quick clamping mechanism.



Protective film
Supplied with a protective film to prevent the fixtures from accumulating dirt and to keep the optics clear and ensure perfect performance.

LOW FLICKER

Product with a very low flicker; uniform light for greater eye protection.

OTHER INFORMATION

DIMM DIG

Standard version **CLD D-D (DALI)** wiring with **subcode -0041:** thanks to pre-programmed settings or a software programme, this type of wiring allows accurate light emission dimming.

UGR <16

The UGR (unified glare rating) is an international unified measure developed by the CIE (Commission International de l'Eclairage) to assess the direct glare generated by a lighting system. The European standard regulating the lighting of indoor work places (**UNI-EN 12464-1**) recommends a specific UGR value for different applications ranging between **10 and 30**; **the lower the UGR value, the lower the glare**. The exact value of this index differs by project type because it depends on the position of the luminaires, room characteristics (dimensions, reflections) and on the point of observation of viewers.

UPON REQUEST

Possibility of centralized lighting point control or via **external** presence/lighting sensors (see chapter *Lighting management systems and recommendations*).

-0050 EM-EC

Version **CLD EC** wiring with **sub-code -0050:** permanently mounted fixture, operating in AC/DC mode, with centralized emergency device, not incorporated into the fixture.

DIMM 1-10V

Version **CLD D (1/10V)** wiring with **sub-code -12.**

PUSH DIG

Version **CLD D-D (PUSH)** wiring with **sub-code -0045:** it is possible to create lighting systems that can be easily switched ON/OFF and dimmed at low costs using conventional mains voltage push-buttons for lighting control.

Upon request "Smart sensor": Smart sensor is an energy efficiency controller for LED panels and dimmer fittings. It uses 1-10V DC dimming technology to control all connected lighting fixtures. Smart sensor also features occupancy sensing and daylight harvesting components and programming units to ensure energy efficiency and lower power consumption. At the heart of the system is the sensor node, which is integrated into each luminaire during assembly. Each sensor node contains a motion sensor, infrared transmitter, infrared receiver, ambient light sensor and intelligent microprocessor.
Smart sensor integrated. Remote control to purchase separately.



Presence detector: lights turn on when they detect movement and turn off when they are no longer needed. This offers further savings. Order with subcode -0092.

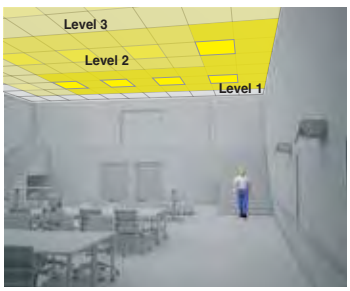

How it works. 01
When a sensor node detects occupancy of a space, it turns on its luminaire to a predetermined light level (e.g. 100%). It simultaneously communicates this occupancy to its neighbouring luminaires using a level 1 proximity-limited infrared signal.

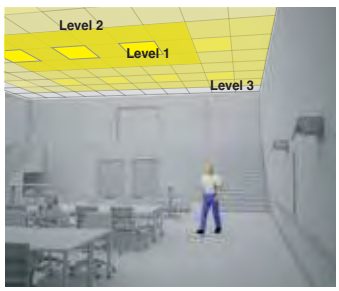

02
On receipt of the **level 1** signal, the neighbouring sensor node switches its own luminaire to a predetermined light level, which is appropriate to the occupant standing in that space (e.g. 80% brightness), and simultaneously relays a **level 2** signal to its own neighbours.

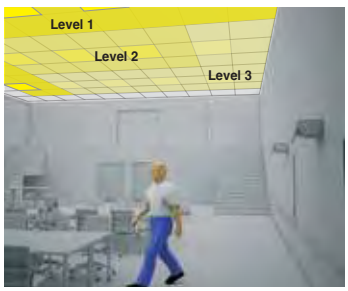

03
This communication propagates rapidly throughout the floor with each sensor node receiving a signal indicating how close a occupant is to it, adjusting its light level accordingly **(level 3)**

ACCESSORIES

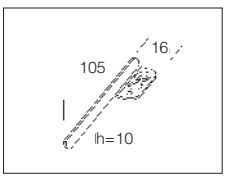

acc. 326
adjustable bracket

galvanized	998059-00

In zinc plated steel. 4-pc set to be used when art. 841 is not contact mounted.

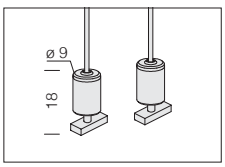

acc. 2518
simple bracket

galvanized	994019-00

Supplied with steel wire (L=1,50m) and millimetre adjustment device (2pcs).

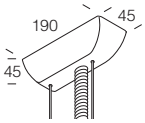

acc. 2608
powered suspension

white	994617-00

Nylon cover and steel brackets. With steel wire Ø1,5mm; L=1,5m - 30Kg, and millimetric adjustment.

L80 B10 80.000h
L90 B10 50.000h
RG0
DARK 65°<500 LIGHT
DIMM DIG
-0050 EM-EC
LOW FLICKER
UGR <16

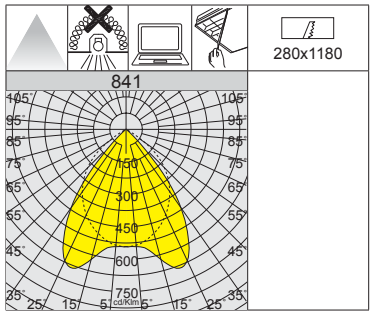

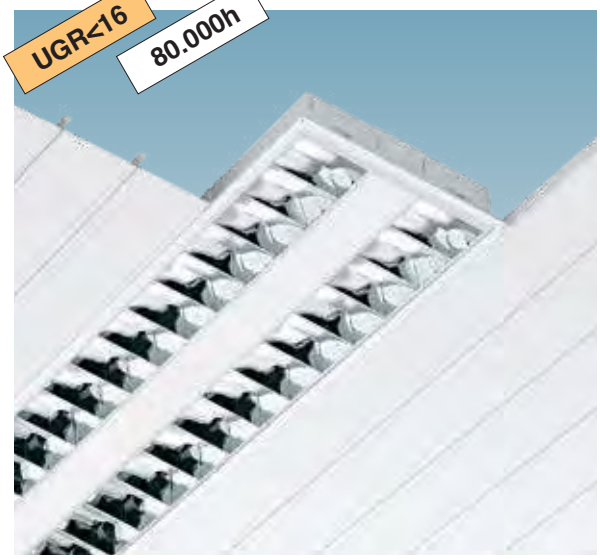

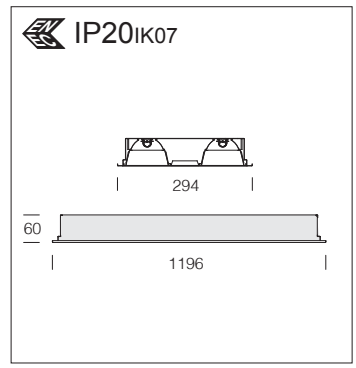

Upon request versions with:
- emergency wiring with centralized power supply **CLD EC** with **sub-code -0050.**
- **CLD D-D (PUSH)** wiring with **sub-code -0045.**

841 Minicomfort

		CLD			CLD D-D (DALI)		LUMEN OUTPUT (tq= 25 °C)
LED	colour	weight	L	code	code	W tot	K - ølm - CRI
LED 2x	white	3.30	1196	153533-00	153533-0041	**37**	4000K - 4093lm - CRI>80

L80 B10 80.000h
L90 B10 50.000h
RG0
DARK 65°<500 LIGHT
DIMM DIG
-0050 EM-EC
LOW FLICKER
UGR <16

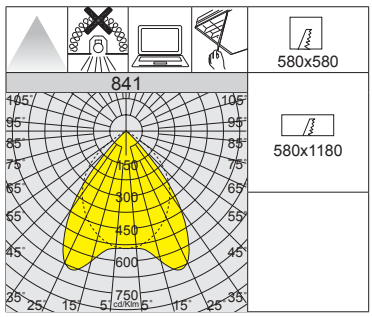



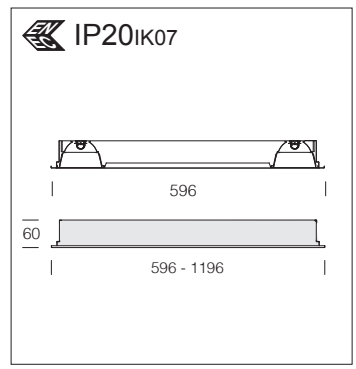

Upon request versions with:
- emergency wiring with centralized power supply **CLD EC** with **sub-code -0050.**
- **CLD D-D (PUSH)** wiring with **sub-code -0045.**

841 Minicomfort

		CLD			CLD D-D (DALI)		LUMEN OUTPUT (tq= 25 °C)
LED	colour	weight	L	code	code	W tot	K - ølm - CRI
LED 2x	white	3.00	596	153536-00	153536-0041	**19**	4000K - 2046lm - CRI>80

841 Minicomfort

		CLD			CLD D-D (DALI)		LUMEN OUTPUT (tq= 25 °C)
LED	colour	weight	L	code	code	W tot	K - ølm - CRI
LED 2+2	white	6.00	1196	153537-00	153537-0041	**37**	4000K - 4093lm - CRI>80

IP20IK07

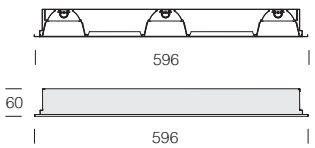



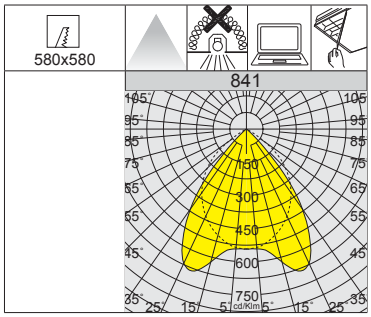

Upon request versions with:
• emergency wiring with centralized power supply **CLD EC** with **sub-code -0050.**
• **CLD D-D (PUSH)** wiring with **sub-code -0045.**

841 Minicomfort

		CLD			CLD D-D (DALI)		LUMEN OUTPUT (tq= 25 °C)
LED	colour	weight	L	code	code	W tot	K - ølm - CRI
LED 3x	white	3.30	596	153534-00	153534-0041	**28**	4000K - 3069lm - CRI>80
				153538-00	153538-0041		4000K - 2925lm - **CRI 90**

IP20IK07

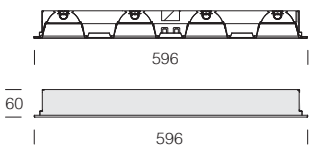



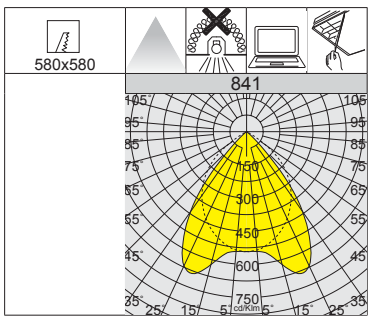

Upon request versions with:
• emergency wiring with centralized power supply **CLD EC** with **sub-code -0050.**
• **CLD D-D (PUSH)** wiring with **sub-code -0045.**

841 Minicomfort

		CLD			CLD D-D (DALI)		LUMEN OUTPUT (tq= 25 °C)
LED	colour	weight	L	code	code	W tot	K - ølm - CRI
LED 4x	white	3.60	596	153535-00	153535-0041	**37**	4000K - 4093lm - CRI>80
				153539-00	153539-0041		4000K - 3901lm - **CRI 90**

L80 B10 80.000h

L90 B10 50.000h

RG0

DARK 65°<500 LIGHT

DIMM DIG

-0050 EM-EC

LOW FLICKER

UGR <16

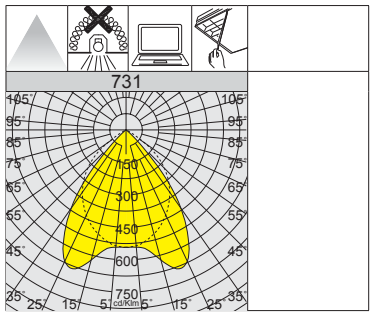

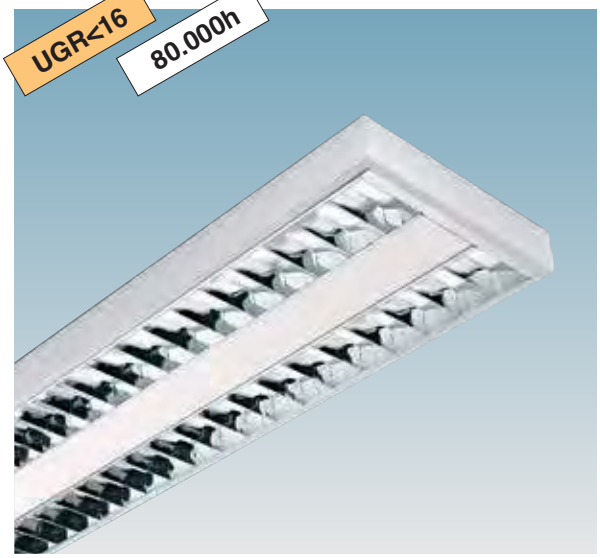

IP20 IK07

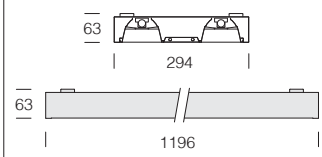

Upon request versions with:
- emergency wiring with centralized power supply **CLD EC** with **sub-code -0050.**
- **CLD D-D (PUSH)** wiring with **sub-code -0045.**

731 Minicomfort

		CLD			CLD D-D (DALI)		LUMEN OUTPUT (tq= 25 °C)
LED	colour	weight	L	code	code	W tot	K - ølm - CRI
LED 2x	white	4.50	1196	143533-00	143533-0041	**37**	4000K - 4093lm - CRI>80

L80 B10 80.000h

L90 B10 50.000h

RG0

DARK 65°<500 LIGHT

DIMM DIG

-0050 EM-EC

LOW FLICKER

UGR <16

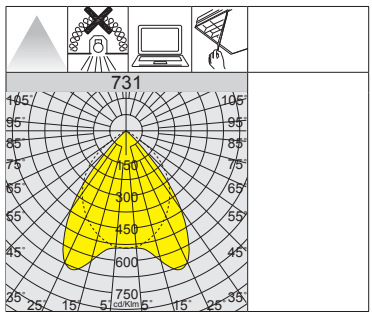



IP20 IK07

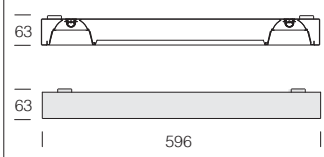

Upon request versions with:
- emergency wiring with centralized power supply **CLD EC** with **sub-code -0050.**
- **CLD D-D (PUSH)** wiring with **sub-code -0045.**

731 Minicomfort

		CLD			CLD D-D (DALI)		LUMEN OUTPUT (tq= 25 °C)
LED	colour	weight	L	code	code	W tot	K - ølm - CRI
LED 2x	white	4.40	596	143536-00	143536-0041	**19**	4000K - 2046lm - CRI>80

IP20 IK07

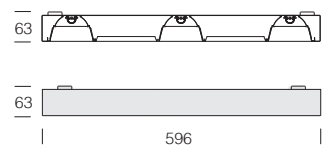

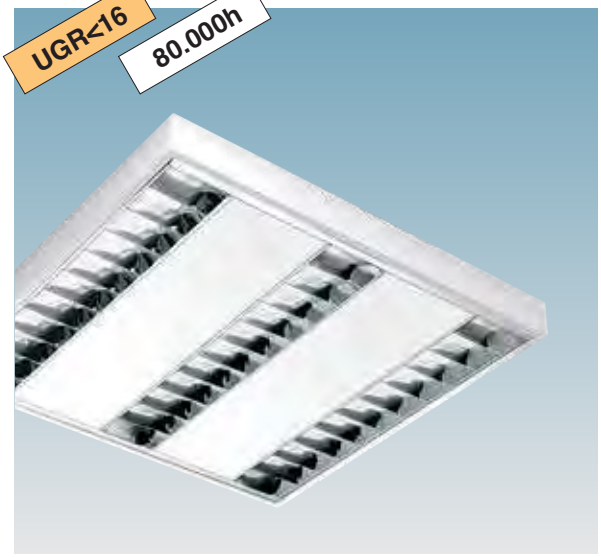

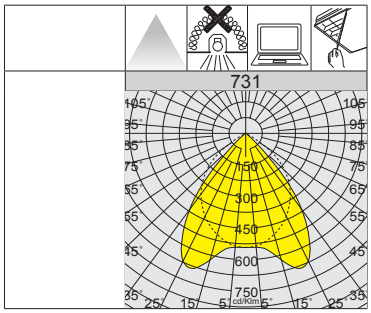

Upon request versions with:
• emergency wiring with centralized power supply **CLD EC** with **sub-code -0050.**
• **CLD D-D (PUSH)** wiring with **sub-code -0045.**

731 Minicomfort							
		CLD			CLD D-D (DALI)		LUMEN OUTPUT (tq= 25 °C)
LED	colour	weight	L	code	code	W tot	K - ølm - CRI
LED 3x	white	4.50	596	143534-00	143534-0041	**28**	4000K - 3069lm - CRI>80
				143538-00	143538-0041		4000K - 2925lm - **CRI 90**

IP20 IK07

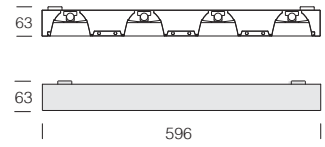



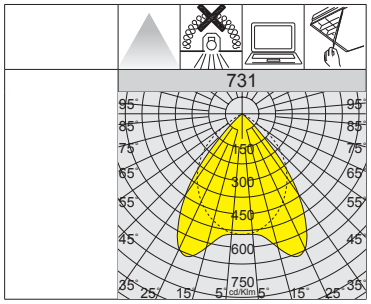

Upon request versions with:
• emergency wiring with centralized power supply **CLD EC** with **sub-code -0050.**
• **CLD D-D (PUSH)** wiring with **sub-code -0045.**

731 Minicomfort							
		CLD			CLD D-D (DALI)		LUMEN OUTPUT (tq= 25 °C)
LED	colour	weight	L	code	code	W tot	K - ølm - CRI
LED 4x	white	4.70	596	143535-00	143535-0041	**37**	4000K - 4093lm - CRI>80
				143539-00	143539-0041		4000K - 3901lm - **CRI 90**



GENERAL CHARACTERISTICS

Housing: pressed steel, surface mounted on T-beams.

3000K - dark light optics: honeycomb structure with PMMA lens to minimize glare.

Internal slab: in PMMA.

Diffuser: in prismatic plastic with high thermal transmittance.

UGR glare index: UGR<16 - EN 12464.

LED: luminous flux maintenance 90%: 50.000h (L90B10).
Power factor ≥0.9.
Photobiological safety class: exempt group.

LOW FLICKER

Product with a very low flicker; uniform light for greater eye protection.

OTHER CHARACTERISTICS



Ibis is a luminaire that stands out for its flexibility. Its antiglare optics and internal PMMA slab guarantees optimal light distribution and ensures maximum visual comfort (**UGR<16**), allowing the fixture to be seamlessly inserted into any room that requires controlled lighting (e.g. offices with VDT workstations, etc.).

DIMM DIG

Standard version **CLD D-D (DALI)** wiring with **subcode -0041:** thanks to pre-programmed settings or a software programme, this type of wiring allows accurate light emission dimming.

OTHER INFORMATION

UGR <16

The UGR (unified glare rating) is an international unified measure developed by the CIE (Commission International de l'Eclairage) to assess the direct glare generated by a lighting system. The European standard regulating the lighting of indoor work places (**UNI-EN 12464-1**) recommends a specific UGR value for different applications ranging between **10 and 30**; **the lower the UGR value, the lower the glare**. The exact value of this index differs by project type because it depends on the position of the luminaires, room characteristics (dimensions, reflections) and on the point of observation of viewers.

UPON REQUEST

Possibility of centralized lighting point control or via **external** presence/lighting sensors (see chapter *Lighting management systems and recommendations*).

EM EC

Version **CLD EC** wiring with **subcode -0050:** permanently mounted fixture, operating in AC/DC mode, with centralized emergency device, not incorporated into the fixture.

PUSH DIG

Version **CLD D-D (PUSH)** wiring with **subcode -0045:** it is possible to create lighting systems that can be easily switched ON/OFF and dimmed at low costs using conventional mains voltage push-buttons for lighting control.

v.a. IP20 IK06
v.l. IP40 IK06

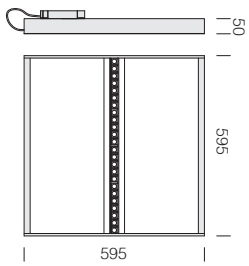

Upon request versions with:
- emergency wiring with centralized power supply **CLD EC** with **sub-code -0050.**
- **CLD D-D (PUSH)** wiring with **sub-code -0045.**



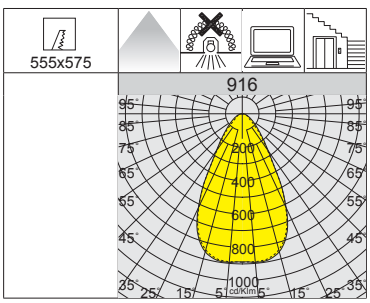

Upon request ceiling version.



L90 B10 50.000h

RG0

DIMM DIG

-0050 EM-EC

LOW FLICKER

UGR <16

3000K

4000K

916 Ibis						
		CLD		CLD D-D (DALI)		LUMEN OUTPUT (tq= 25 °C)
LED	colour	weight	code	code	W tot	K - ølm - CRI
LED	white	3.20	114014-00	114014-0041	**33**	4000K - 3265lm - **CRI 90**
			114014-39	114014-3941		3000K - 3036lm - **CRI 90**

ACCESSORIES

acc. 320 safety cord
998004-00
Steel safety cord.

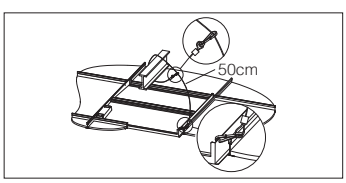

acc. 600 EM power kit	
1h	986604-00
3h	986604-31
EM (emergency) lamp power kit complete with connectors.	

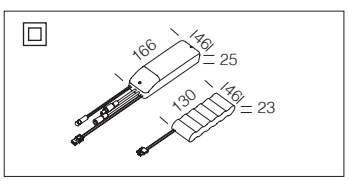



GENERAL CHARACTERISTICS

High lighting performance, drastic cuts in energy costs and all the advantages offered by LED sources are the distinctive traits of **Heron**, the evolution of the classic panel led.

Housing: pressed steel, surface mounted on T-beams.

Diffuser: in prismatic plastic with high thermal transmittance.

UGR glare index: UGR<19 - EN 12464.

LED: power factor ≥0.9.
Luminous flux maintenance 80%: 80.000h (L80B10).
Luminous flux maintenance 90%: 50.000h (L90B10).
Photobiological safety class: exempt group.

LOW FLICKER

Product with a very low flicker; uniform light for greater eye protection.

OTHER CHARACTERISTICS



The lamp's shape guarantees uniform light distribution: white-light LEDs emit high quality lighting to ensure the best visual comfort (**UGR<19**) and perfect colour rendering, ideal for all those spaces that need constant lighting.

DIMM DIG

Standard version **CLD D-D (DALI)** wiring with **sub-code -0041:** thanks to pre-programmed settings or a software programme, this type of wiring allows accurate light emission dimming.

OTHER INFORMATION

UGR <19

The UGR (unified glare rating) is an international unified measure developed by the CIE (Commission International de l'Eclairage) to assess the direct glare generated by a lighting system. The European standard regulating the lighting of indoor work places (**UNI-EN 12464-1**) recommends a specific UGR value for different applications ranging between **10 and 30**; **the lower the UGR value, the lower the glare**. The exact value of this index differs by project type because it depends on the position of the luminaires, room characteristics (dimensions, reflections) and on the point of observation of viewers.

UPON REQUEST

Possibility of centralized lighting point control or via **external** presence/lighting sensors (see chapter *Lighting management systems and recommendations*).

DIMM 1-10V

Version **CLD D (1/10V)** wiring with **sub-code -12.**

ACCESSORIES

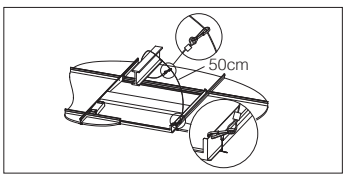

acc. 320 safety cord
998004-00
Steel safety cord.

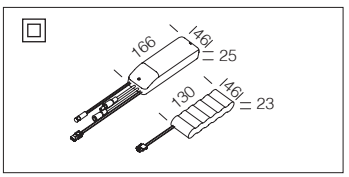

acc. 600 EM power kit	
1h	986604-00
3h	986604-31
EM (emergency) lamp power kit complete with connectors.	

v.a. IP20IK06
v.l. IP40IK06

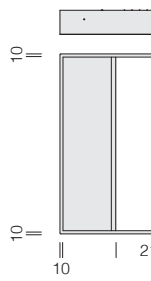

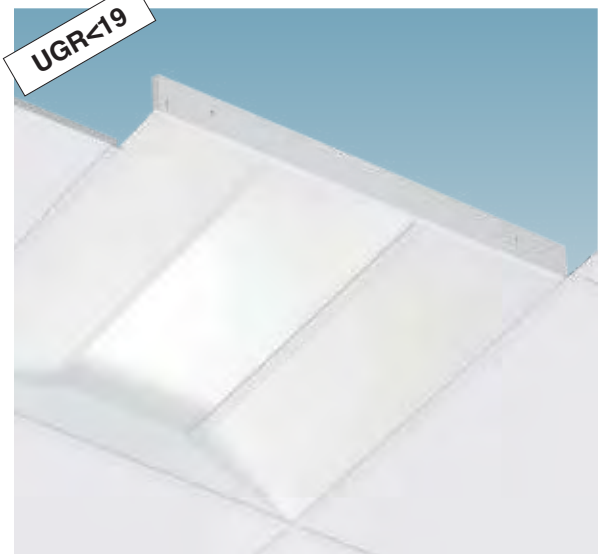

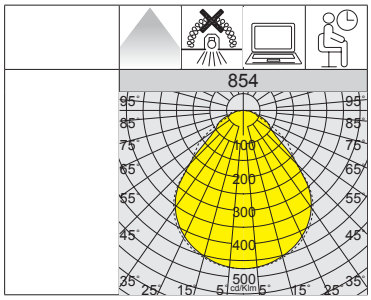

L80 B10 80.000h
L90 B10 50.000h
RG0
DIMM DIG
LOW FLICKER
UGR <19

854 Heron						
		CLD		CLD D-D (DALI)		LUMEN OUTPUT (tq= 25 °C)
LED	colour	weight	code	code	W tot	K - ølm - CRI
LED	white	3.70	150212-00	150212-0041	**28**	4000K - 3375lm - CRI>80
			150213-00	150213-0041	**38**	4000K - 4556lm - CRI>80

IP40IK06

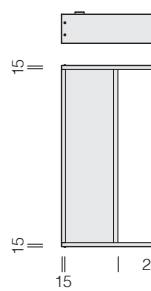

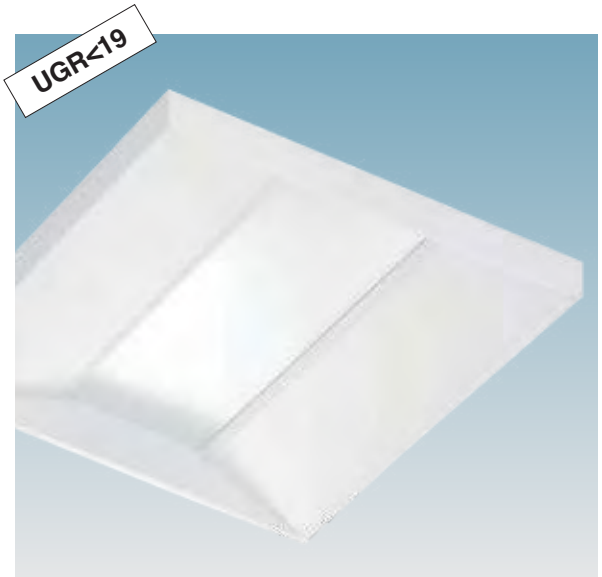

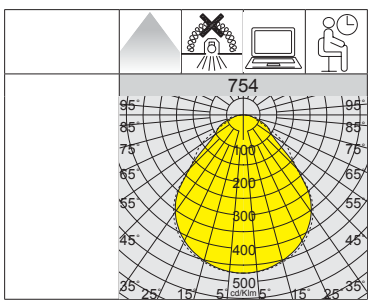

L80 B10 80.000h
L90 B10 50.000h
RG0
DIMM DIG
LOW FLICKER
UGR <19

754 Heron - ceiling						
		CLD		CLD D-D (DALI)		LUMEN OUTPUT (tq= 25 °C)
LED	colour	weight	code	code	W tot	K - ølm - CRI
LED	white	5.70	140212-00	150212-0041	**28**	4000K - 3375lm - CRI>80
			140213-00	150213-0041	**38**	4000K - 4556lm - CRI>80



GENERAL CHARACTERISTICS

Housing: in steel sheet.

Diffuser: in shatterproof and self-extinguishing V2 matt polycarbonate.

Coating: white polyester powder coating, UV stabilized.

Supplied without mounting brackets for contact mounting on the cross T structure. For non-contact mounting, please order brackets acc. 898/899.

Upon request: loop-in connection, max 1,5mmq.

LED: power factor ≥0.9.
Luminous flux maintenance 90%: 50.000h (L90B10).
Photobiological safety class: exempt group.

LOW FLICKER

Product with a very low flicker; uniform light for greater eye protection.

INSTALLATION

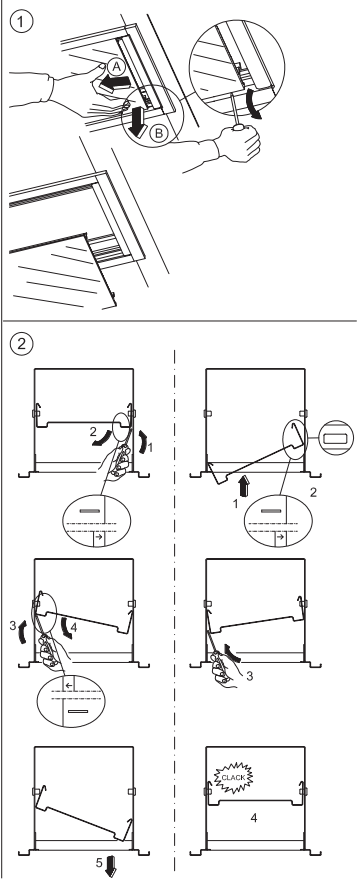

OTHER INFORMATION



The economic benefits of the new technologies alone are not able to ensure efficiency without the combination of other important advantages. The most significant one concerns the quality of light. New lighting fixtures will make you live and work better. The picture shows how lighting quality is the result of a set of elements connected to visual perception. These elements include visual performance, associated with the level of lighting, glare limitation, visual comfort, which is determined by the correct distribution of light and by a good colour rendering and ambient lighting, which depends on the colour of the light source and on light beam direction. In other words, a good lighting system is one that ensures the right amount of light, without producing glare and where colours can be admired almost as if they were viewed under natural light.

UPON REQUEST

Possibility of centralized lighting point control or via **external** presence/lighting sensors (see chapter *Lighting management systems and recommendations*).

DIMM DIG

Version **CLD D-D (DALI)** wiring with **sub-code -0041:** thanks to pre-programmed settings or a software programme, this type of wiring allows accurate light emission dimming.

v.a. IP20 IK07
v.l. IP40 IK07

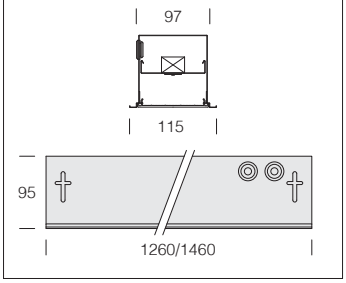

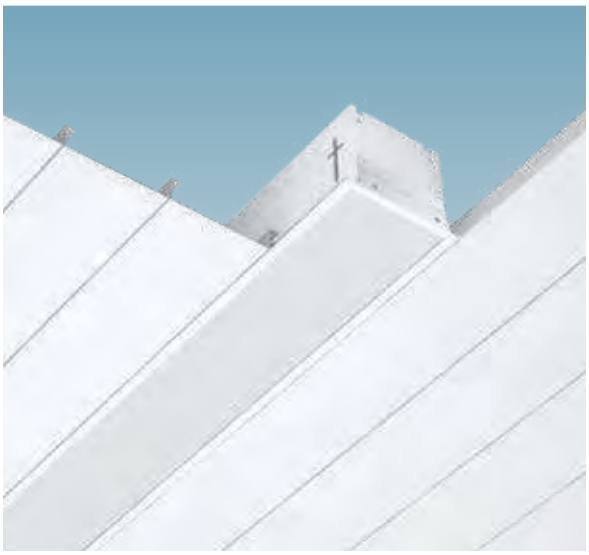

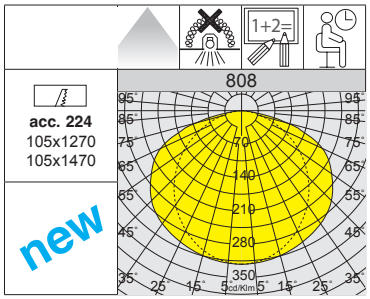

L90 B10 50.000h

RG0

U.V.

LOW FLICKER

848 Supercomfort

		CLD				LUMEN OUTPUT (tq= 25 °C)
LED	colour	weight	L	code	W tot	K - ølm - CRI
LED	white	3.60	1260	153436-00	**26**	4000K - **3030lm** - CRI>80
				153437-00	**48**	4000K - 4855lm - CRI>80
LED	white	4.50	1460	153438-00	**72**	4000K - 7073lm - CRI>80

ACCESSORIES



acc. 200 bracket for conti. line

steel	998011-00

To be used when the lighting system is installed in continuous row.

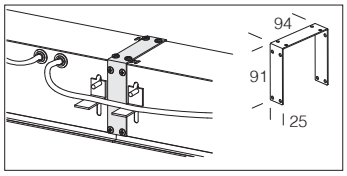

acc. 224 end cap

white	998014-00

To be used on ceiling fixtures as end caps (also for installation in continuous line).

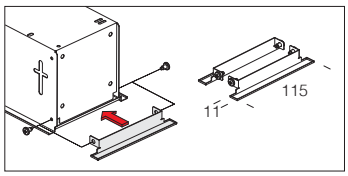

acc. 898 front bracket

galvanized	998025-00

Set of 4 pcs. Bracket for frontal mounting.

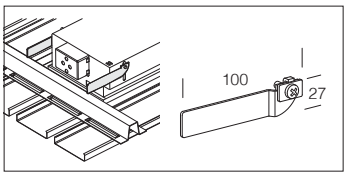

acc. 899 bracket

galvanized	998027-00

In zinc plated steel. 4-pc set to be used when the fixture is not contact mounted.

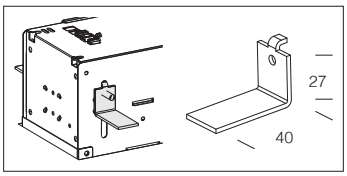

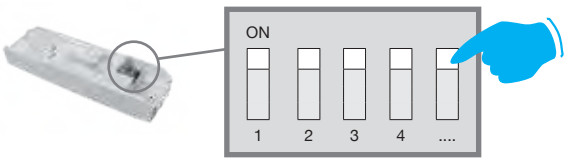

ADAPT THE CURRENT TO ACHIEVE OPTIMAL LUMINOUS FLUX

DIP SWITCH SETTING: the fixture comes with a *DIP SWITCH* driver for **THE SETTING OF THE OUTPUT CURRENT**. In this way you, can **ENSURE THE BEST LUMINOUS FLUX** for any lighting design.

The possibility to choose the correct drive current for LEDs will allow you to have the right power under specific design conditions. Using a lower current will improve the efficiency of fixtures and therefore increase energy savings, whilst a higher current will result in a higher light flux so that you can reduce the number of fixtures.



Adequate lighting ensures proper perception of the environment and enables us to feel comfortable with our surroundings. This is the concept underlying the creation of the Compact Dark recessed floodlight, ideal for quick, low-cost installation in any exhibition setting and fulfil interior decorators' artificial lighting requirements.

Housing: made in aluminium with spring clips for recessed mounting.

Reflector: made in metallized aluminium.

Diffusor: shatterproof, V0 self-extinguishing polycarbonate with anti-glare shielding. .

Coating: UV epoxy polyester power coating.

UGR glare index: UGR<19 - EN 12464.

LED: power factor ≥0,92.
Luminous flux maintenance 90%: 50.000h (L90B10).
Photobiological safety class: Exempt group.

Compact Dark allows you to create a "**LOOP-IN**": a system to connect two or more luminaires to the power supply.

OTHER INFORMATION

UGR <19

The UGR (unified glare rating) is an international unified measure developed by the CIE (Commission International de l'Eclairage) to assess the direct glare generated by a lighting system. The European standard regulating the lighting of indoor work places (**UNI-EN 12464-1**) recommends a specific UGR value for different applications ranging between **10 and 30**; **the lower the UGR value, the lower the glare**. The exact value of this index differs by project type because it depends on the position of the luminaires, room characteristics (dimensions, reflections) and on the point of observation of viewers.

LOW FLICKER

Product with a very low flicker; uniform light for greater eye protection.

DIMM DIG

Standard version **CLD D-D (DALI)** wiring with **subcode -0041:** thanks to pre-programmed settings or a software programme, this type of wiring allows accurate light emission dimming.

ECONOMIC BENEFITS



The economic benefits of the new technologies alone are not able to ensure efficiency without the combination of other important advantages. The most significant one concerns the quality of light. New lighting fixtures will make you live and work better. The picture shows how lighting quality is the result of a set of elements connected to visual perception. These elements include visual performance, associated with the level of lighting, glare limitation, visual comfort, which is determined by the correct distribution of light and by a good colour rendering and ambient lighting, which depends on the colour of the light source and on light beam direction. In other words, a good lighting system is one that ensures the right amount of light, without producing glare and where colours can be admired almost as if they were viewed under natural light.

UPON REQUEST

Possibility of centralized lighting point control or via **external** presence/lighting sensors (see chapter *Lighting management systems and recommendations*).

v.a. IP20 IK06
v.l. IP54 IK06

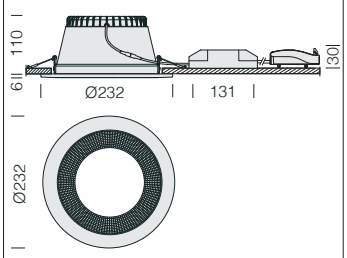



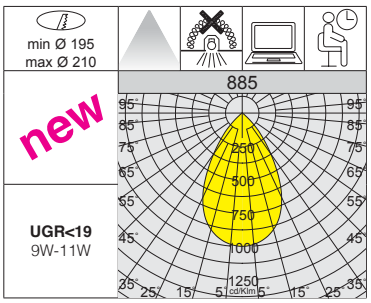

L90 B10 50.000h
RG0
U.V.
LOW FLICKER
UGR <19

885 Compact Dark - DIP SWITCH

		CLD				LUMEN OUTPUT (tq= 25 °C)
LED	colour	weight	code	I out	W tot	K - ølm - CRI
LED	white	0.60	156452-00	***250***	**9**	4000K - **1431lm** - CRI>80

DIP SWITCH SETTING		
		LUMEN OUTPUT (tq= 25 °C)
I out	W tot	K - ølm - CRI
250	***9****	*4000K - 1431lm - CRI>80*
300	**11***	4000K - 1721lm - CRI>80
450	**16**	4000K - 2549lm - CRI>80
500	**18**	4000K - 2857lm - CRI>80

v.a. IP20 IK06
v.l. IP54 IK06

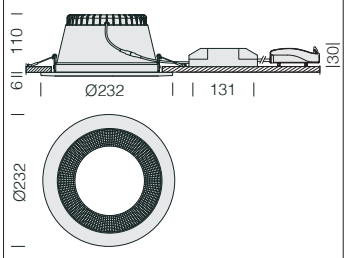



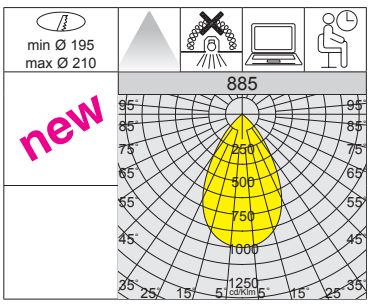

L90 B10 50.000h
RG0
DIMM DIG
U.V.
LOW FLICKER
UGR <19

As standard, Compact Dark comes with **LOOP-IN:** a terminal that allows the installer to connect the power line cable to the internal circuit through automatic wire clamps.



885 Compact Dark - DALI

		CLD D-D (DALI)			LUMEN OUTPUT (tq= 25 °C)
LED	colour	weight	code	W tot	K - ølm - CRI
LED	white	0.60	156452-0041	**18**	4000K - **2857lm** - CRI>80
DALI version with the driver set to the maximum power of the DIP SWITCH version.					

acc. 600 EM power kit	
1h	986604-00
3h	986604-31
EM (emergency) lamp power kit complete with connectors.	

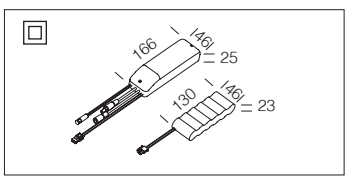

L90 B10 50.000h
RG0
U.V.
LOW FLICKER
3000K
4000K

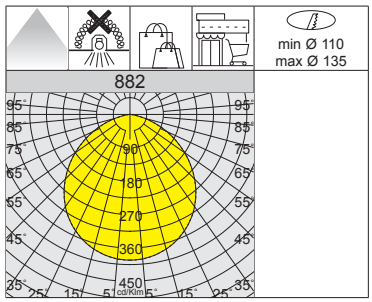

Upon request version with:
• **CLD D-D (DALI)** wiring with **sub-code -0041.**



v.a. IP20 IK07
v.l. IP44 IK07

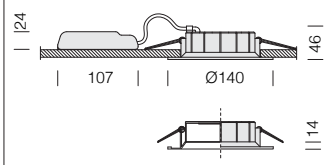

GENERAL CHARACTERISTICS

Housing: die cast aluminium complete with spring clips for recessed mounting.

Diffuser: high-temperature resistant thermoplastic material.

882 Compact - Ø140 - DIP SWITCH

		CLD				LUMEN OUTPUT (tq= 25 °C)
LED	colour	weight	code	I out	W tot	K - ølm - CRI
LED	white	0.30	156405-00	***400***	**11**	4000K - 1317lm - **CRI 95**
			156405-39			3000K - 1252lm - **CRI 95**

DIP SWITCH SETTING		
		LUMEN OUTPUT (tq= 25 °C)
I out	W tot	K - ølm - CRI
250	7	4000K - 839lm - **CRI 95**
350	10	4000K - 1164lm - **CRI 95**
400	***11***	*4000K - 1317lm - **CRI 95***

DIP SWITCH SETTING		
		LUMEN OUTPUT (tq= 25 °C)
I out	W tot	K - ølm - CRI
250	7	3000K - 797lm - **CRI 95**
350	10	3000K - 1106lm - **CRI 95**
400	***11***	*3000K - 1252lm - **CRI 95***



acc. 590 wire spring adapters

998115-00

Wire spring adapters to increase the supporting surface. 2-pc set.

L90 B10 50.000h
RG0
U.V.
LOW FLICKER
3000K
4000K

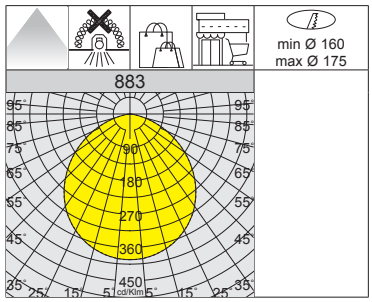

Upon request version with:
• **CLD D-D (DALI)** wiring with **sub-code -0041.**



v.a. IP20 IK07
v.l. IP44 IK07

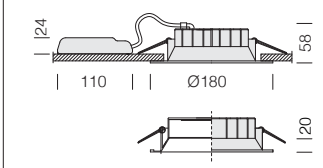

GENERAL CHARACTERISTICS

Housing: die cast aluminium complete with spring clips for recessed mounting.

Diffuser: high-temperature resistant thermoplastic material.

883 Compact - Ø180 - DIP SWITCH

		CLD				LUMEN OUTPUT (tq= 25 °C)
LED	colour	weight	code	I out	W tot	K - ølm - CRI
LED	white	0.40	156415-00	***400***	**14**	4000K - 1830lm - **CRI 95**
			156415-39			3000K - 1702lm - **CRI 95**

DIP SWITCH SETTING		
		LUMEN OUTPUT (tq= 25 °C)
I out	W tot	K - ølm - CRI
250	9	4000K - 1147lm - **CRI 95**
350	13	4000K - 1607lm - **CRI 95**
400	***14***	*4000K - 1830lm - **CRI 95***
500	19	4000K - 2247lm - **CRI 95**

DIP SWITCH SETTING		
		LUMEN OUTPUT (tq= 25 °C)
I out	W tot	K - ølm - CRI
250	9	3000K - 1097lm - **CRI 95**
350	13	3000K - 1536lm - **CRI 95**
400	***14***	*3000K - 1702lm - **CRI 95***
500	19	3000K - 2135lm - **CRI 95**

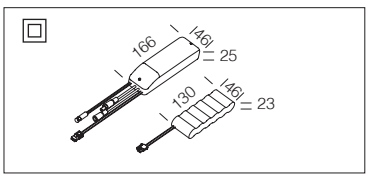

acc. 600 EM power kit

1h	986604-00
3h	986604-31

EM (emergency) lamp power kit complete with connectors.

v.a. IP20 IK07
v.l. IP44 IK07

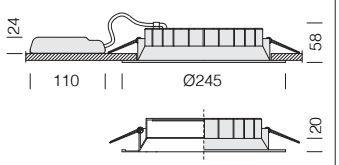



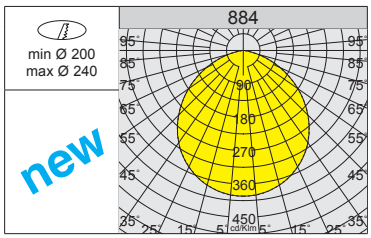

L90 B10 50.000h
RG0
U.V.
LOW FLICKER
3000K
4000K

GENERAL CHARACTERISTICS

Housing: die cast aluminium complete with spring clips for recessed mounting.

Diffuser: high-temperature resistant thermoplastic material.

884 Compact - Ø245 - DIP SWITCH

		CLD				LUMEN OUTPUT (tq= 25 °C)
LED	colour	weight	code	I out	W tot	K - ølm - CRI
LED	white	0.70	156424-00	***500***	**18**	4000K - 2385lm - **CRI 95**
			156424-39			3000K - 2266lm - **CRI 95**
LED	white	0.70	156425-00	***700***	**25**	4000K - **3342lm** - **CRI 95**
			156425-39			3000K - **3175lm** - **CRI 95**

DIP SWITCH SETTING

	LUMEN OUTPUT (tq= 25 °C)
I out	W tot	K - ølm - CRI
450	14	4000K - 1926lm - **CRI 95**
500	***18***	*4000K - 2385lm - **CRI 95***
550	20	4000K - 2626lm - **CRI 95**
600	22	4000K - 2884lm - **CRI 95**

DIP SWITCH SETTING

	LUMEN OUTPUT (tq= 25 °C)
I out	W tot	K - ølm - CRI
450	14	3000K - 1854lm - **CRI 95**
500	***18***	*3000K - 2226lm - **CRI 95***
550	20	3000K - 2503lm - **CRI 95**
600	22	3000K - 2729lm - **CRI 95**

DIP SWITCH SETTING

	LUMEN OUTPUT (tq= 25 °C)
I out	W tot	K - ølm - CRI
700	***25***	*4000K - 3342lm - **CRI 95***
750	27	4000K - 3538lm - **CRI 95**
800	29	4000K - 3775lm - **CRI 95**

DIP SWITCH SETTING

	LUMEN OUTPUT (tq= 25 °C)
I out	W tot	K - ølm - CRI
700	***25***	*3000K - 3175lm - **CRI 95***
750	27	3000K - 3362lm - **CRI 95**
800	29	3000K - 3586lm - **CRI 95**

v.a. IP20 IK07
v.l. IP44 IK07

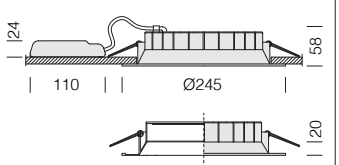



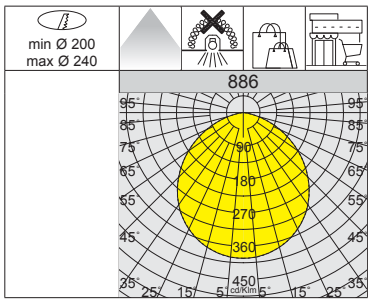

L90 B10 50.000h
RG0
U.V.
LOW FLICKER
CCT SWITCH

GENERAL CHARACTERISTICS

Housing: die cast aluminium complete with spring clips for recessed mounting.

Diffuser: high-temperature resistant thermoplastic material.

886 Compact - Ø245 - CCT SWITCH

		CLD			LUMEN OUTPUT (tq= 25 °C)
LED	colour	weight	code	W tot	K - ølm - CRI
LED	white	0.70	156465-00	**25**	3000K - 3137lm - **CRI>90**
					3500K - 3233lm - **CRI>90**
					4000K - 3235lm - **CRI>90**



The main feature of this luminaire is the "colour-changing" technology: with the built-in selector switch positioned on the fixture's body, you can choose the desired colour temperature (3000K-3500K-4000K), adjusting its emission to most lighting installations.

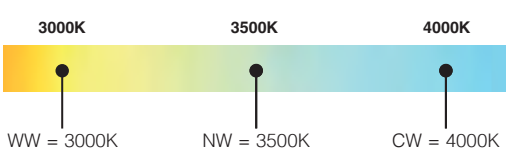



The lighting of transit areas (stairs, corridors, entrances) as well as workplaces (public buildings, offices, hotels and restaurants), must not be taken for granted for both functional and aesthetic reasons. Robust and high-quality recessed spotlights, like the one of the Compact family by Disano, are the ideal solution: easy to fit into any space, they guarantee maximum efficiency and long life.

GENERAL CHARACTERISTICS

Housing: die cast aluminium complete with spring clips for recessed mounting.

Diffuser: high-temperature resistant thermoplastic material.

Coating: power-coated with a UV-resistant polyester epoxy pain.

LED: power factor ≥0,92.
Luminous flux maintenance 90%: 50.000h (L90B10).
Photobiological safety class: Exempt group.



The main feature of this luminaire is the "colour-changing" technology: with the built-in selector switch positioned on the fixture's body, you can choose the desired colour temperature (3000K-4000K-5700K), adjusting its emission to most lighting installations.

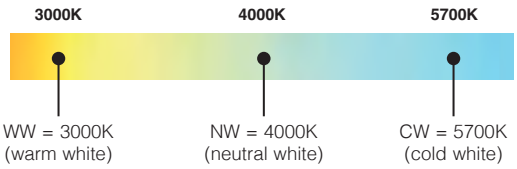

L90 B10 50.000h

RG0

U.V.

LOW FLICKER

CCT SWITCH

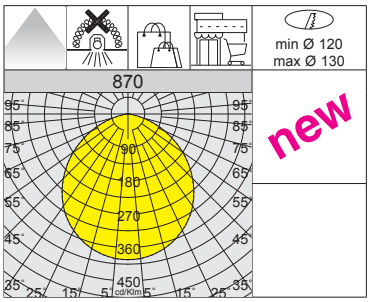

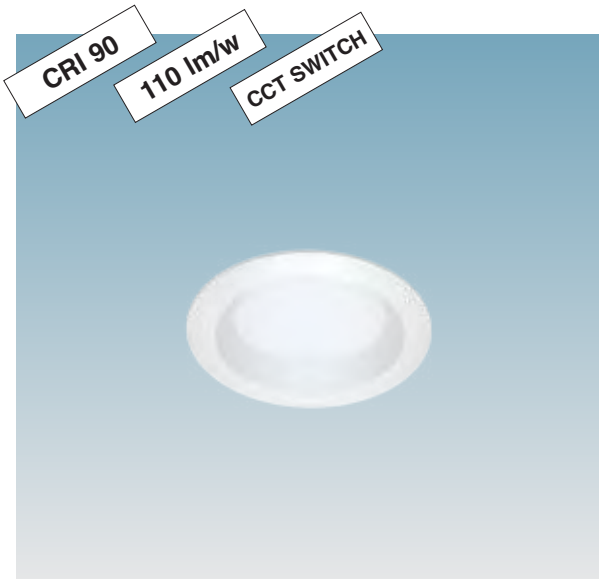

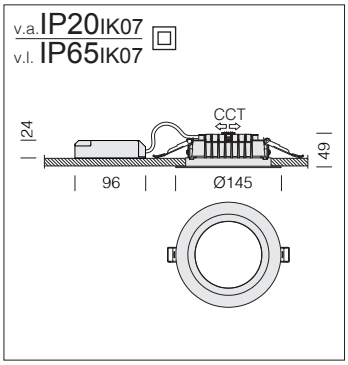

LED: power factor ≥0,95.
Luminous flux maintenance 80%: 55.000h (L80B20).
Photobiological safety class: exempt group.

870 Compact - Ø145 - CCT SWITCH

		CLD			LUMEN OUTPUT (tq= 25 °C)
LED	colour	weight	code	W tot	K - ølm - CRI
LED	white	0.40	156440-00	13	3000K - **1361lm** - **CRI 90**
					4000K - **1433lm** - **CRI 90**
					5700K - **1433lm** - **CRI 90**

v.a. IP20 IK07
v.l. IP65 IK07

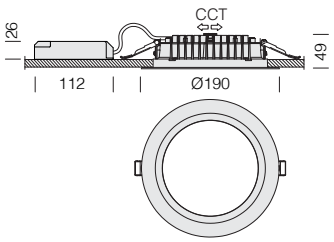

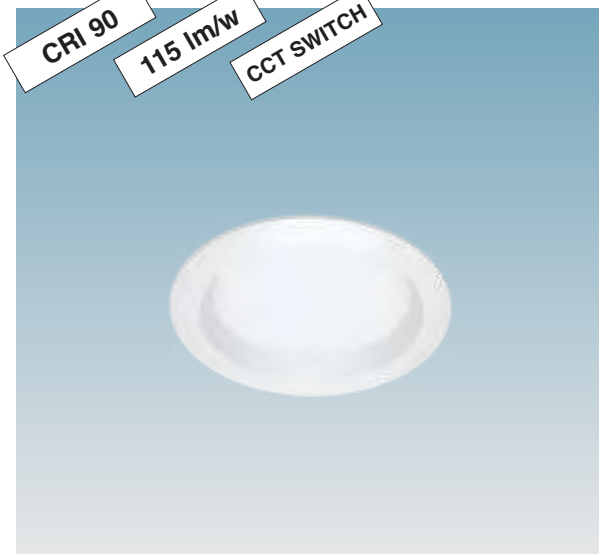

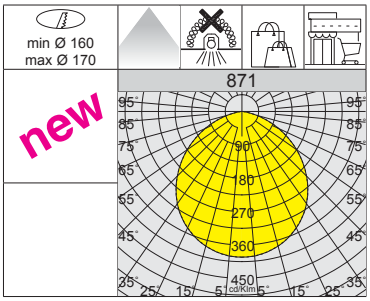

L90 B10 50.000h
RG0
U.V.
LOW FLICKER
CCT SWITCH

871 Compact - Ø190 - CCT SWITCH					
		CLD			LUMEN OUTPUT (tq= 25 °C)
LED	colour	weight	code	W tot	K - ølm - CRI
LED	white	0.50	156442-00	**18**	3000K - **1975lm** - **CRI 90**
					4000K - **2079lm** - **CRI 90**
					5700K - **2079lm** - **CRI 90**

v.a. IP20 IK07
v.l. IP65 IK07

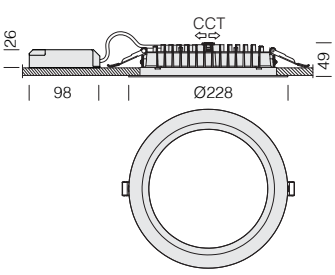

LED: power factor ≥0,95.
Luminous flux maintenance 80%: 55.000h (L80B20).
Photobiological safety class: exempt group.



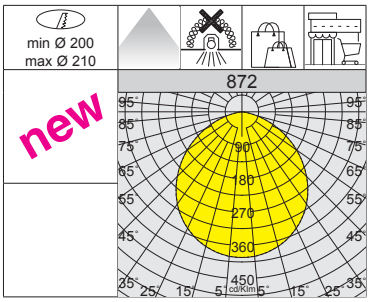

L90 B10 50.000h
RG0
U.V.
LOW FLICKER
CCT SWITCH

872 Compact - Ø228 - CCT SWITCH					
		CLD			LUMEN OUTPUT (tq= 25 °C)
LED	colour	weight	code	W tot	K - ølm - CRI
LED	white	0.70	156444-00	**25**	3000K - **2744lm** - **CRI 90**
					4000K - **2888lm** - **CRI 90**
					5700K - **2888lm** - **CRI 90**

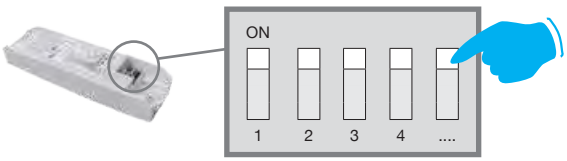

ADAPT THE CURRENT TO ACHIEVE OPTIMAL LUMINOUS FLUX

DIP SWITCH SETTING: the fixture comes with a *DIP SWITCH* driver for **THE SETTING OF THE OUTPUT CURRENT**. In this way you, can **ENSURE THE BEST LUMINOUS FLUX** for any lighting design.

The possibility to choose the correct drive current for LEDs will allow you to have the right power under specific design conditions. Using a lower current will improve the efficiency of fixtures and therefore increase energy savings, whilst a higher current will result in a higher light flux so that you can reduce the number of fixtures.



GENERAL CHARACTERISTICS

Housing: fixed donwlight in die cast aluminium.

Lens: in PMMA lens with high efficiency output and very low glare rate.

Dark light optics: in anti-glare metalized plastic material.

Equipment: equipped with galvanised steel support brackets, with housing for springs for attachment to the false ceilings.

UGR glare index: UGR<19 - EN 12464.

LED: power factor ≥0.9.
Luminous flux maintenance 90%: 50.000h (L90B10).

L90 B10 50.000h

RG0

DIMM DIG

U.V.

DARK 65°<500 LIGHT

UGR <19

LOW FLICKER

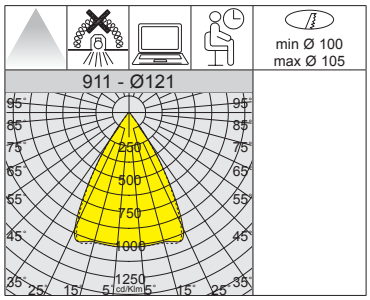



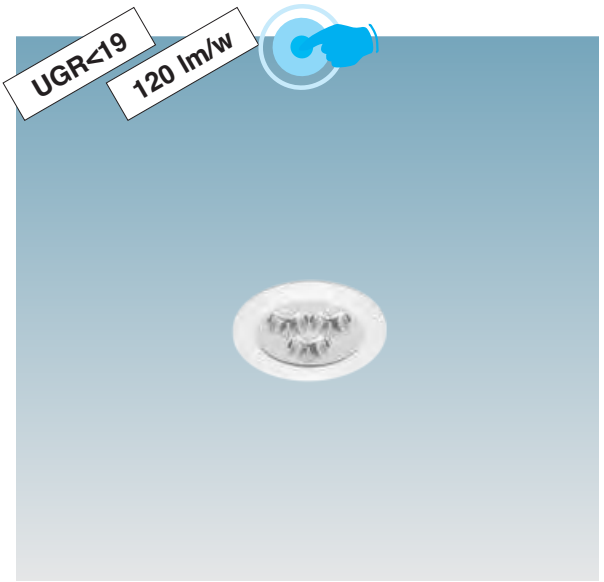

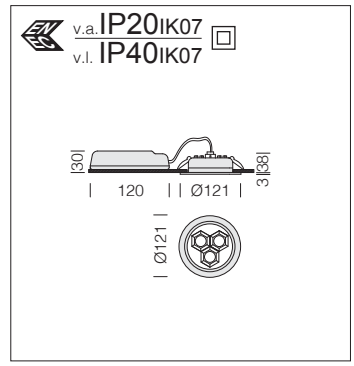

911 Health Dark - Ø121 - DIP SWITCH							
		CLD					LUMEN OUTPUT (tq= 25 °C)
LED	colour	weight	Ø	code	I out	W tot	K - ølm - CRI
LED	white	0.30	121	156472-00	***250***	**10**	4000K - 1195lm - CRI>80

		CLD D-D (DALI)				LUMEN OUTPUT (tq= 25 °C)
LED	colour	weight	Ø	code	W tot	K - ølm - CRI
LED	white	0.30	121	156472-0041	**14**	4000K - 1555lm - CRI>80
DALI version with the driver set to the maximum power of the DIP SWITCH version.						

DIP SWITCH SETTING		
		LUMEN OUTPUT (tq= 25 °C)
I out	W tot	K - ølm - CRI
250	***10***	*4000K - 1195lm - CRI>80*
300	**12**	4000K - 1380lm - CRI>80
350	**14**	4000K - 1555lm - CRI>80

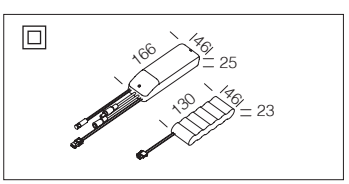

acc. 600 EM power kit	
1h	986604-00
3h	986604-31
EM (emergency) lamp power kit complete with connectors.	

v.a. IP20 IK07
v.l. IP40 IK07

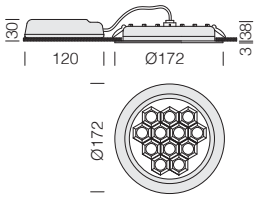



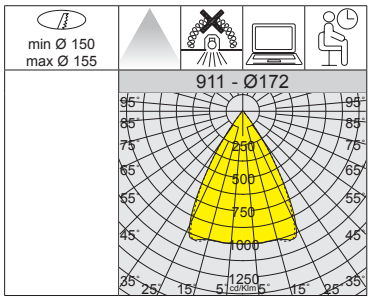

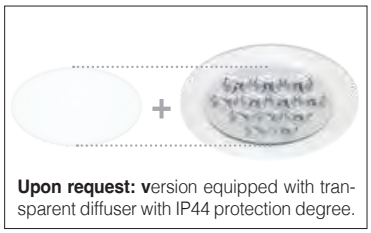

Upon request: version equipped with transparent diffuser with IP44 protection degree.

L90 B10 50.000h
RG0
DIMM DIG
U.V.
DARK 65% 500 LIGHT
UGR <19
LOW FLICKER
3000K
4000K

911 Health Dark - Ø172 - DIP SWITCH

		CLD					LUMEN OUTPUT (tq= 25 °C)
LED	colour	weight	Ø	code	I out	W tot	K - ølm - CRI
LED	white	0.50	172	156473-00	***500***	**19**	4000K - 2490lm - CRI>80
				156473-39			3000K - 2316lm - CRI>80

		CLD D-D (DALI)				LUMEN USCENTI (tq= 25 °C)
LED	colour	weight	Ø	code	W tot	K - ølm - CRI
LED	white	0.50	172	156473-0041	**22**	4000K - 2915lm - CRI>80
				156473-3941		3000K - 2711lm - CRI>80

DALI version with the driver set to the maximum power of the DIP SWITCH version.

DIP SWITCH SETTING		
		LUMEN OUTPUT (tq= 25 °C)
I out	W tot	K - ølm - CRI
350	**13**	4000K - 1795lm - CRI>80
500	***19***	*4000K - 2490lm - CRI>80*
600	**22**	4000K - 2915lm - CRI>80

DIP SWITCH SETTING		
		LUMEN OUTPUT (tq= 25 °C)
I out	W tot	K - ølm - CRI
350	**13**	3000K - 1669lm - CRI>80
500	***19***	*3000K - 2316lm - CRI>80*
600	**22**	3000K - 2711lm - CRI>80

v.a. IP20 IK07
v.l. IP40 IK07

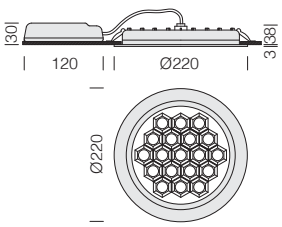



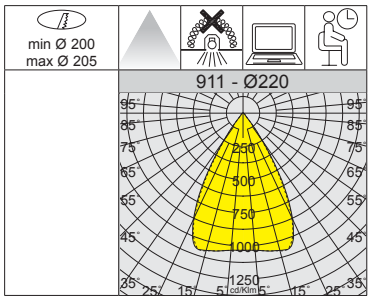

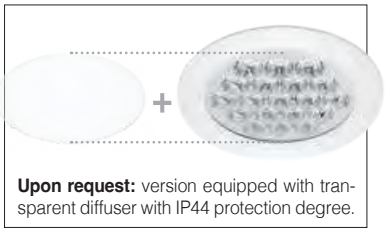

Upon request: version equipped with transparent diffuser with IP44 protection degree.

L90 B10 50.000h
RG0
DIMM DIG
U.V.
DARK 65% 500 LIGHT
UGR <19
LOW FLICKER
3000K
4000K

911 Health Dark - Ø220 - DIP SWITCH

		CLD					LUMEN OUTPUT (tq= 25 °C)
LED	colour	weight	Ø	code	I out	W tot	K - ølm - CRI
LED	white	0.70	220	156477-00	***800***	**30**	4000K - 3740lm - CRI>80
							3000K - 3553lm - CRI>80

		CLD D-D (DALI)				LUMEN OUTPUT (tq= 25 °C)
LED	colour	weight	Ø	code	code	K - ølm - CRI
LED	white	0.70	220	156477-0041	**30**	4000K - 3740lm - CRI>80
				156477-3941		3000K - 3553lm - CRI>80

DALI version with the driver set to the maximum power of the DIP SWITCH version.

DIP SWITCH SETTING		
		LUMEN OUTPUT (tq= 25 °C)
I out	W tot	K - ølm - CRI
600	**22**	4000K - 2900lm - CRI>80
700	**26**	4000K - 3315lm - CRI>80
800	***30***	*4000K - 3740lm - CRI>80*

DIP SWITCH SETTING		
		LUMEN OUTPUT (tq= 25 °C)
I out	W tot	K - ølm - CRI
600	**22**	3000K - 2755lm - CRI>80
700	**26**	3000K - 3149lm - CRI>80
800	***30***	*3000K - 3553lm - CRI>80*

acc. 610 finishing ring

white	998037-00

Finishing ring for Health Ø220; can act as both an aesthetic finishing and to cover fitting holes with diameters from Ø280mm up to Ø300mm max.

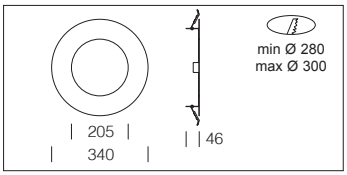

disano



L90 B10 50.000h

RG0

DIMM DIG

U.V.

DARK 65%<500 LIGHT

UGR <19

LOW FLICKER

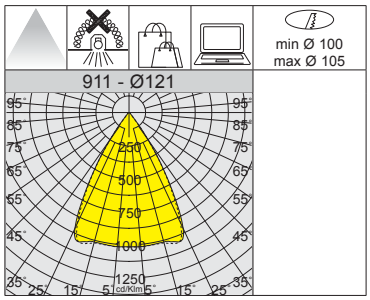

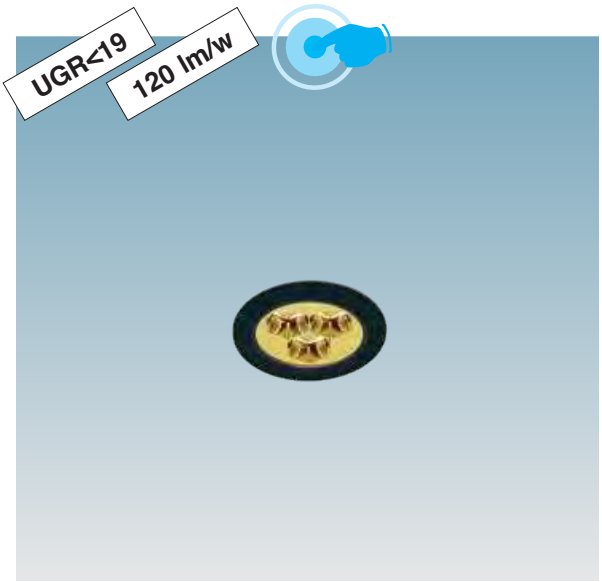

v.a. IP20 IK07
v.l. IP40 IK07

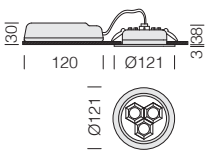

912 Health Dark GOLD - Ø121 - DIP SWITCH							
		CLD					LUMEN OUTPUT (tq= 25 °C)
LED	colour	weight	Ø	code	I out	W tot	K - ølm - CRI
LED	white	0.30	121	156478-00	***250***	**10**	4000K - 1195lm - CRI>80

DIP SWITCH SETTING		
		LUMEN OUTPUT (tq= 25 °C)
I out	W tot	K - ølm - CRI
250	***10***	*4000K - 1195lm - CRI>80*
300	**12**	4000K - 1380lm - CRI>80
350	**14**	4000K - 1555lm - CRI>80

		CLD D-D (DALI)				LUMEN OUTPUT (tq= 25 °C)
LED	colour	weight	Ø	code	W tot	K - ølm - CRI
LED	white	0.30	121	156478-0041	**14**	4000K - 1555lm - CRI>80
DALI version with the driver set to the maximum power of the DIP SWITCH version.						

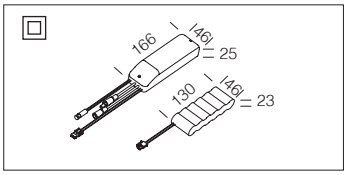

acc. 600 EM power kit	
1h	986604-00
3h	986604-31
EM (emergency) lamp power kit complete with connectors.	

v.a. IP20 IK07
v.l. IP40 IK07

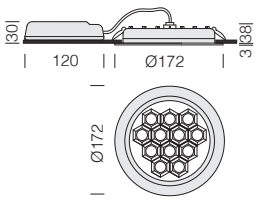



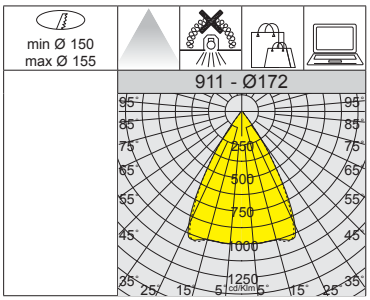

L90 B10 50.000h

RG0

DIMM DIG

U.V.

DARK 65%<500 LIGHT

UGR <19

LOW FLICKER

912 Health Dark GOLD - Ø172 - DIP SWITCH

		CLD					LUMEN OUTPUT (tq= 25 °C)
LED	colour	weight	Ø	code	I out	W tot	K - ølm - CRI
LED	white	0.50	172	156479-00	***500***	**19**	4000K - 2490lm - CRI>80

		CLD D-D (DALI)				LUMEN OUTPUT (tq= 25 °C)
LED	colour	weight	Ø	code	W tot	K - ølm - CRI
LED	white	0.50	172	156479-0041	**22**	4000K - 2915lm - CRI>80

DALI version with the driver set to the maximum power of the DIP SWITCH version.

DIP SWITCH SETTING	
	LUMEN OUTPUT (tq= 25 °C)
I out	W tot	K - ølm - CRI
350	13	4000K - 1795lm - CRI>80
500	***19***	*4000K - 2490lm - CRI>80*
600	22	4000K - 2915lm - CRI>80

v.a. IP20 IK07
v.l. IP40 IK07

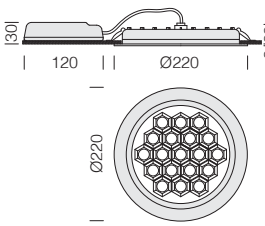



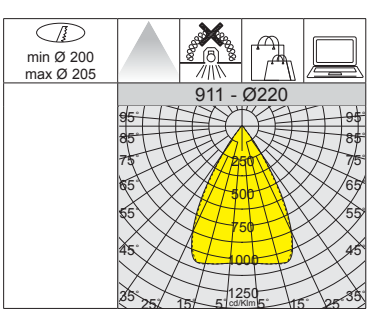

L90 B10 50.000h

RG0

DIMM DIG

U.V.

DARK 65%<500 LIGHT

UGR <19

LOW FLICKER

912 Health Dark GOLD - Ø220 - DIP SWITCH

		CLD					LUMEN OUTPUT (tq= 25 °C)
LED	colour	weight	Ø	code	I out	W tot	K - ølm - CRI
LED	white	0.70	220	156480-00	***800***	**30**	4000K - 3740lm - CRI>80

		CLD D-D (DALI)				LUMEN OUTPUT (tq= 25 °C)
LED	colour	weight	Ø	code	W tot	K - ølm - CRI
LED	white	0.70	220	156480-0041	**30**	4000K - 3740lm - CRI>80

DALI version with the driver set to the maximum power of the DIP SWITCH version.

DIP SWITCH SETTING	
	LUMEN OUTPUT (tq= 25 °C)
I out	W tot	K - ølm - CRI
600	22	4000K - 2900lm - CRI>80
700	26	4000K - 3315lm - CRI>80
800	***30***	*4000K - 3740lm - CRI>80*



GENERAL CHARACTERISTICS

Housing: fixed donwlight in die cast aluminium.

Screen: in anti-glare matt plastic material.

Coating: epoxy polyester powder coating resistant to UV rays.

Equipment: equipped with galvanised steel support brackets, with housing for springs for attachment to the false ceilings.

LED: power factor ≥0.9.
Luminous flux maintenance 90%: 50.000h (L90B10).

L90 B10 50.000h

RG0

U.V.

LOW FLICKER

DIMM DIG

3000K

4000K

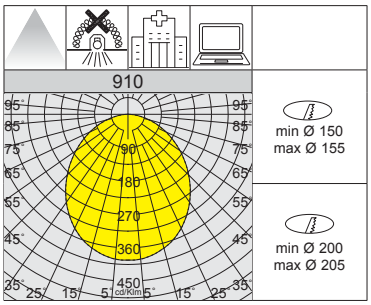



IP54 protection rating
with silicone rubber gasket

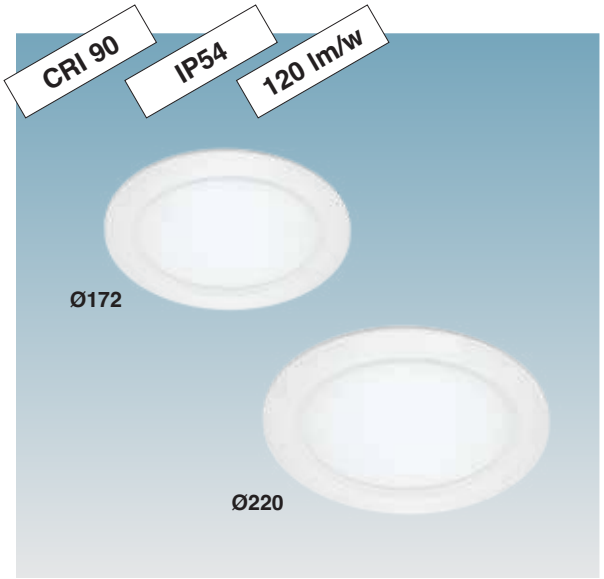

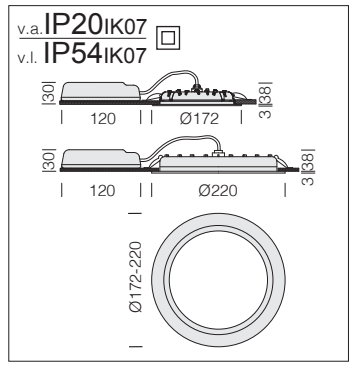

910 Health							
		CLD			CLD D-D (DALI)		LUMEN OUTPUT (tq= 25 °C)
LED	colour	weight	Ø	code	code	W tot	K - ølm - CRI
LED	white	0.50	172	156471-00	156471-0041	**16**	4000K - 1700lm - **CRI 90**
				156471-39	156471-3941		3000K - 1581lm - **CRI 90**
LED	white	0.70	220	156470-00	156470-0041	**22**	4000K - 2640lm - **CRI 90**
				156470-39	156470-3941		3000K - 2455lm - **CRI 90**

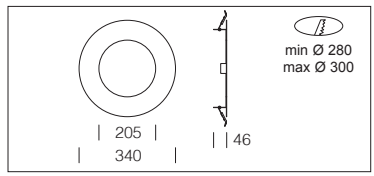

acc. 610 finishing ring	
white	998037-00

Finishing ring for Health Ø220; can act as both an aesthetic finishing and to cover fitting holes with diameters from Ø280mm up to Ø300mm max.

IP65 IK06

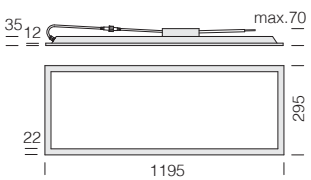

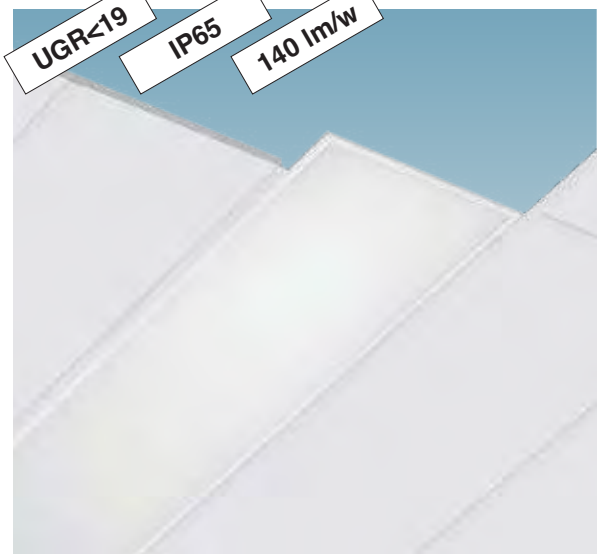

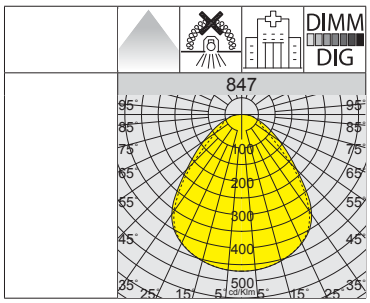

* CLD D-D (DALI) I class



L90 B10 80.000h

RG0

U.V.

-0050 EM-EC

LOW FLICKER

UGR <19

3000K

4000K

GENERAL CHARACTERISTICS

Housing: housing in galvanised steel sheet, and frame in aluminium, contact mounting on the cross T structure.

LED: power factor ≥0.95. Luminous flux maintenance 90%: 80.000h (L90B10).

.

847 Comfort Panel R - IP65 for aseptic environments

		CLD		*CLD D-D (DALI)		LUMEN OUTPUT (tq= 25 °C)
LED	colour	weight	code	code	W tot	K - ølm - CRI
LED	white	1.50	150257-00	150257-0041	**24**	4000K - 3360lm - CRI>80
			150257-39	150257-3941		3000K - 3160lm - CRI>80

Upon request: version with emergency wiring with centralized power supply **(sub-code -0050)** ideal for **reducing maintenance and installation costs.**

IP65 IK06

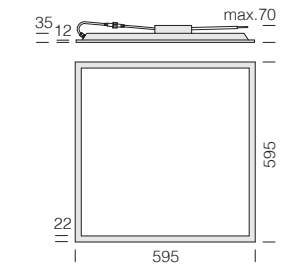

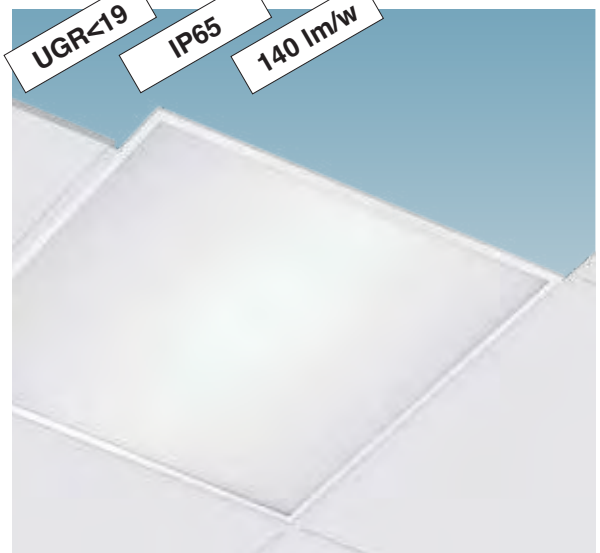

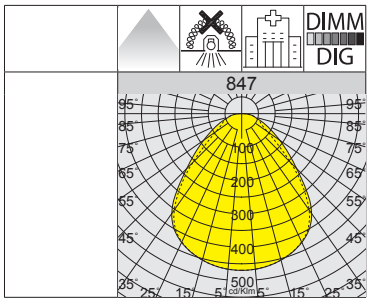

* CLD D-D (DALI) I class



L90 B10 80.000h

RG0

U.V.

-0050 EM-EC

LOW FLICKER

UGR <19

3000K

4000K

GENERAL CHARACTERISTICS

Housing: housing in galvanised steel sheet, and frame in aluminium, contact mounting on the cross T structure.

LED: power factor ≥0.95. Luminous flux maintenance 90%: 80.000h (L90B10).

847 Comfort Panel - IP65 for aseptic environments

		CLD		*CLD D-D (DALI)		LUMEN OUTPUT (tq= 25 °C)
LED	colour	weight	code	code	W tot	K - ølm - CRI
LED	white	1.00	150256-00	150256-0041	**24**	4000K - 3360lm - CRI>80
			150256-39	150256-3941		3000K - 3160lm - CRI>80

Upon request: version with emergency wiring with centralized power supply **(sub-code -0050)** ideal for **reducing maintenance and installation costs.**

acc. 320 safety cord
998004-00
Steel safety cord.

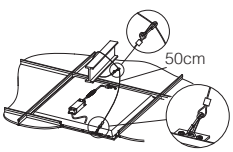

acc. 339 Connector	
2P	993836-00
3P	993854-00
To be used for mains connection of the fixture.	

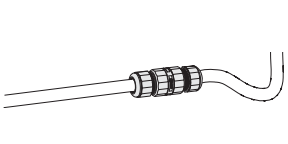



L90 B10 50.000h

RG0

U.V.

+30 C° -25

DIMM DIG

-0050 EM-EC

LOW FLICKER

UGR <19

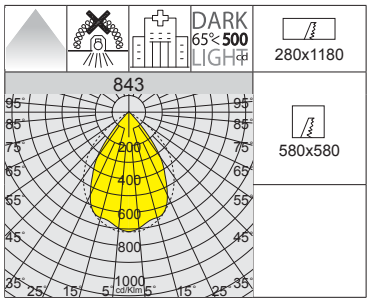





IP65 IK08

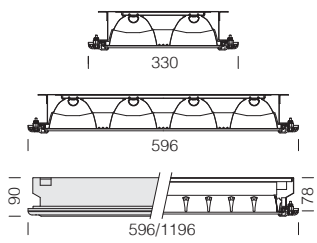

GENERAL CHARACTERISTICS

Housing: pressed steel with anodized extruded aluminium frame; anodised 2mm thick matt aluminium louvre and protective 4mm thick tempered glass.

LED: power factor ≥0.9.
Luminous flux maintenance 90%: 50.000h (L90B10).

843 Ermetica - IP65 for aseptic environments - with matt louvre + protective glass

		CLD			CLD D-D (DALI)		LUMEN OUTPUT (tq= 25 °C)
LED	colour	weight	L	code	code	W tot	K - ølm - CRI
LED 2x	anodis.	11.00	1196	152081-00	152081-0041	**44**	4000K - 4420lm - **CRI 90**
LED 4x		10.00	596	152080-00	152080-0041	**34**	4000K - 3440lm - **CRI 90**

Installation: unsuitable for mounting in non-inspectionable false ceilings. **Upon request:** version with emergency wiring with centralized power supply **(sub-code -0050)** ideal for **reducing maintenance and installation costs.**

IP65IK08

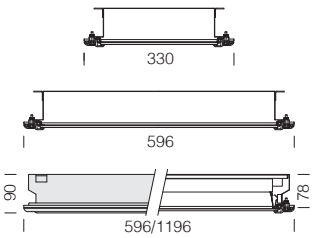



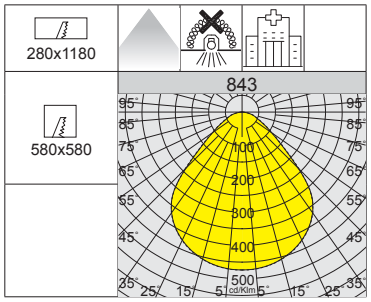



L90 B10 50.000h
RG0
U.V.
+30 C° -25
DIMM DIG
-0050 EM-EC
LOW FLICKER
UGR <19

GENERAL CHARACTERISTICS

Housing: pressed steel with anodized extruded aluminium frame; prismatic engineering plastic diffuser and protective 4mm thick tempered glass.

LED: power factor ≥0.9.
Luminous flux maintenance 90%: 50.000h (L90B10).

846 Ermetica - IP65 for aseptic environments - with prismatic diffuser + protective glass

		CLD			CLD D-D (DALI)		LUMEN OUTPUT (tq= 25 °C)
LED	colour	weight	L	code	code	W tot	K - ølm - CRI
LED	anodis.	10.00	1196	152082-00	152082-0041	**44**	4000K - 4700lm - **CRI 90**
		9.00	596	152083-00	152083-0041	**34**	4000K - 3700lm - **CRI 90**

Installation: unsuitable for mounting in non-inspectionable false ceilings. **Upon request:** version with emergency wiring with centralized power supply **(sub-code -0050)** ideal for **reducing maintenance and installation costs.**

IP65IK08

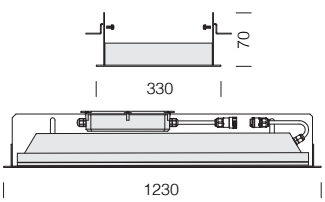

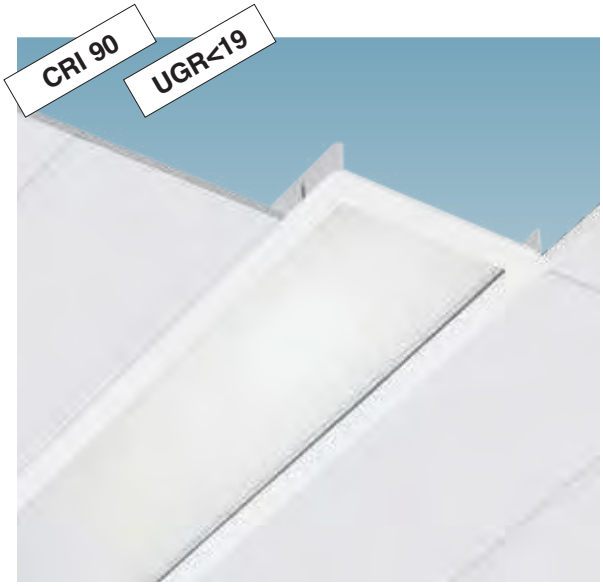

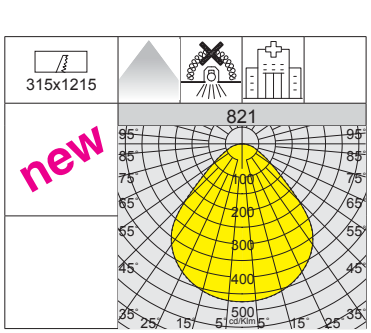

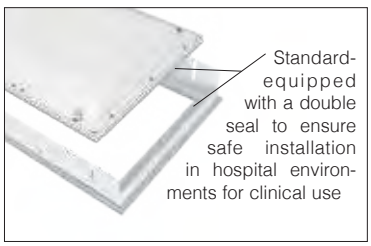

L90 B10 50.000h
RG0
U.V.
+30 C° -25
DIMM DIG
-0050 EM-EC
LOW FLICKER
UGR <19

GENERAL CHARACTERISTICS

Frame: steel sheet, complete with a steel sheet panel, prismatic technopolymer diffuser, and 4 mm-thick tempered protective glass.

LED: power factor ≥0.9.
Luminous flux maintenance 90%: 50.000h (L90B10).

821 Ermetica - IP65 for hospital environments for clinical use - with prismatic diffuser + protective glass

		CLD			CLD D-D (DALI)		LUMEN OUTPUT (tq= 25 °C)
LED	colour	weight	L	code	code	W tot	K - ølm - CRI
LED	white	8.90	1230	152084-00	152084-0041	**44**	4000K - **4554lm** - **CRI 90**

Installation: unsuitable for mounting in non-inspectionable false ceilings. **Upon request:** version with emergency wiring with centralized power supply **(sub-code -0050)** ideal for **reducing maintenance and installation costs**, and 600mmx600mm version.

INSTALLATION SEQUENCE FOR FALSE CEILINGS

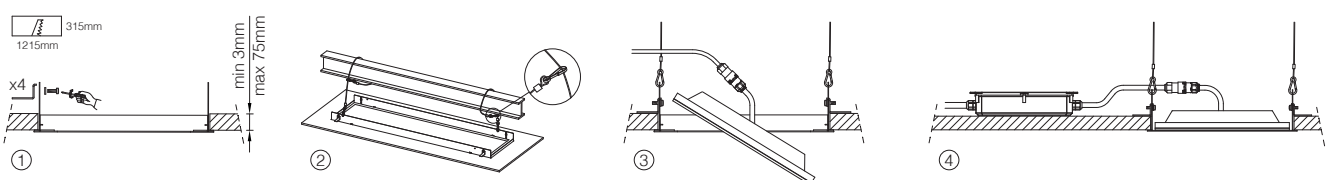

disano



GENERAL CHARACTERISTICS

Housing: made of extruded aluminium complete with polycarbonate end caps.

Coating: polyester resin-based powder coating, UV stabilised.

Equipment: supplied standard, versions complete with steel cable (L=1,5m) and mounting brackets for installation as pendant lamps, mounting brackets and for installation as ceiling fixtures, and with pass-through wiring for continuous line modules. Power cable to purchased separately**.**

LED: power factor: ≥0,92
Luminous flux maintenance 90%: 50.000h (L90B10).
Photobiological safety class: exempt group

OTHER CHARACTERISTICS

LOW FLICKER

Product with a very low flicker; uniform light for greater eye protection.

DIMM DIG

Version **CLD D-D (DALI)** wiring with **subcode -0041:** thanks to pre-programmed settings or a software programme, this type of wiring allows accurate light emission dimming.

CONTINUOUS LINE INSTALLATION AND ACCESSORIES

Feed-through wiring and quick access system to terminal blocks make mounting FAST and SECURE.

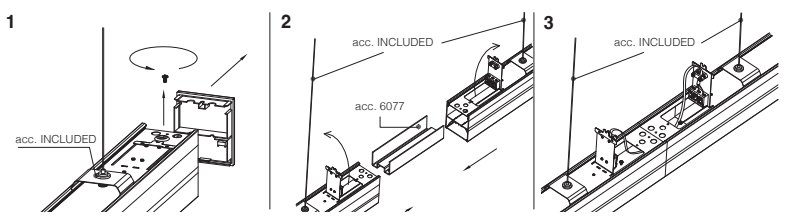

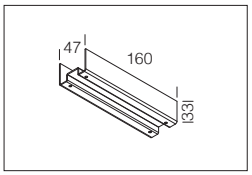

acc. 6077 junction brackets
132917-00
Utilize for the suspension/ceiling installation in continuous line of Parigi.

INSTALLATION WITH CIRCULAR JOINT

Installing two or more fixtures with the circular joint allows the creation of linear, L-shaped, square, Y-shaped, or X-shaped configurations, enhancing the layout of the space.

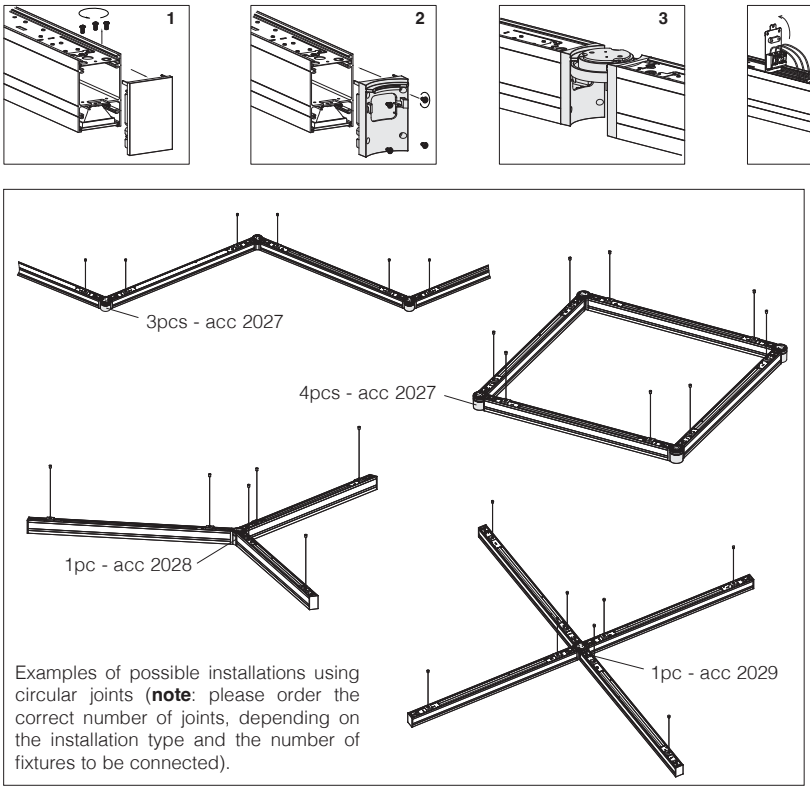

Examples of possible installations using circular joints (**note**: please order the correct number of joints, depending on the installation type and the number of fixtures to be connected).

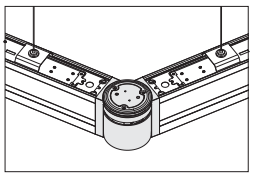

acc. 2027 L-shaped circular joint	
white	132953-00
black	132954-00
To be used for the connection and rotation of 2 fixtures.	

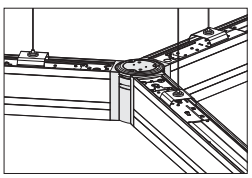

acc. 2028 Y-shaped circular joint	
white	132955-00
black	132956-00
To be used for the connection and rotation of 3 fixtures.	

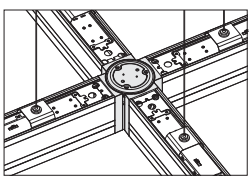

acc. 2029 X-shaped circular joint	
white	132957-00
black	132958-00
To be used for the connection and rotation of 4 fixtures.	

CEILING INSTALLATION

Parigi complete with mounting brackets for installation as ceiling fixtures.

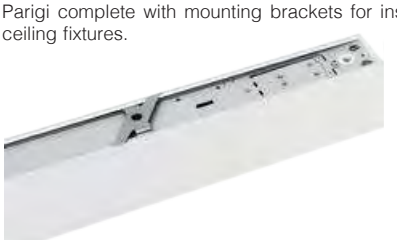

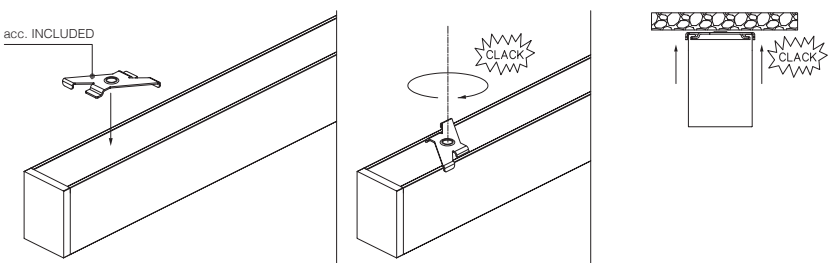

IP40 IK07

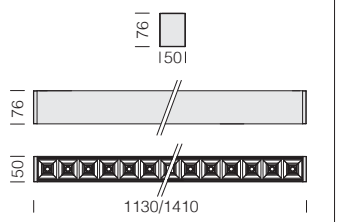

Comfort optics art. 6630: metallised dark anti-glare polycarbonate for improved visual comfort.

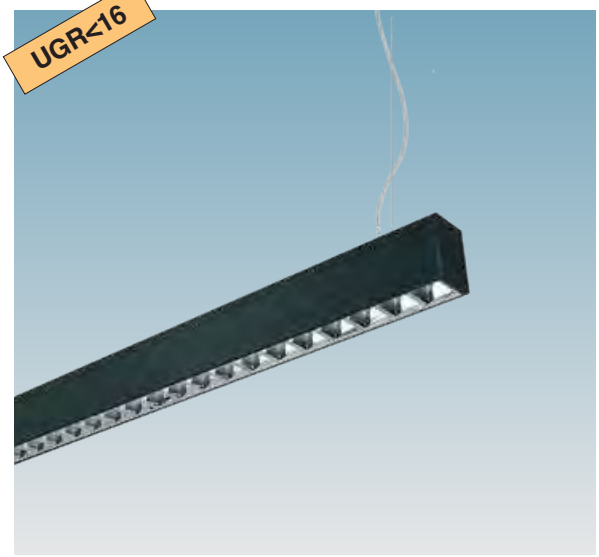

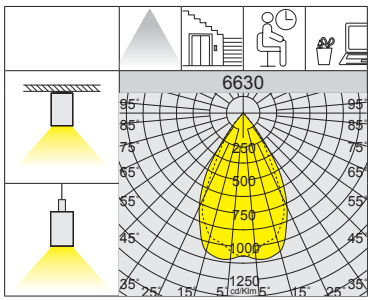

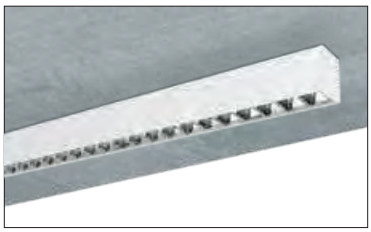

L90 B10 50.000h

RG0

U.V.

DIMM DIG

LOW FLICKER

UGR <16

6630 Parigi - suspension/ceiling - direct light - DARK comfort optics - UGR<16							
		CLD			CLD D-D (DALI)		LUMEN OUTPUT (tq= 25 °C)
LED	housing	L (mm)	weight	code	code	W tot	K - ølm - CRI
LED 28 lens	white	1130	1.70	133070-00	133070-0041	**31**	4000K - 3329lm - CRI>80
	black			133070-21009005	133070-21419005		
LED 35 lens	white	1410	2.20	133071-00	133071-0041	**39**	4000K - 4180lm - CRI>80
	black			133071-21009005	133071-21419005		

IP40 IK07

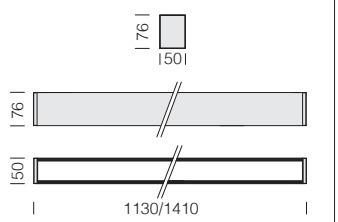

Diffuser art. 6637: prismatic polycarbonate.



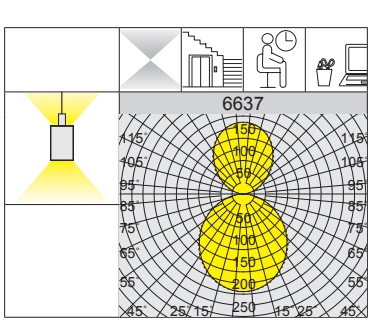



L90 B10 50.000h

RG0

U.V.

LOW FLICKER

CCT SWITCH



The main feature of this luminaire is the "colour-changing" technology: with the built-in selector switch positioned on the fixture's body, you can choose the desired colour temperature (3000K-4000K-6000K), adjusting its emission to most lighting installations.

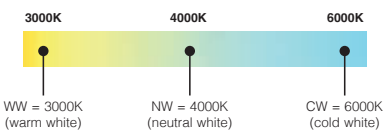

6637 Parigi - CCT SWITCH - suspension - direct/indirect light						
		CLD				LUMEN OUTPUT (tq= 25 °C)
LED	housing	L (mm)	weight	code	W tot	K - ølm - CRI
LED	white	1130	1.80	133072-00	**48**	3000K - 4460lm - CRI>80
						4000K - 4800lm - CRI>80
						6000K - 4800lm - CRI>80
LED	black	1130	1.80	133072-21009005	**48**	3000K - 4460lm - CRI>80
						4000K - 4800lm - CRI>80
						6000K - 4800lm - CRI>80
LED	white	1410	2.40	133073-00	**55**	3000K - 5120lm - CRI>80
						4000K - 5500lm - CRI>80
						6000K - 5500lm - CRI>80
LED	black	1410	2.40	133073-21009005	**55**	3000K - 5120lm - CRI>80
						4000K - 5500lm - CRI>80
						6000K - 5500lm - CRI>80

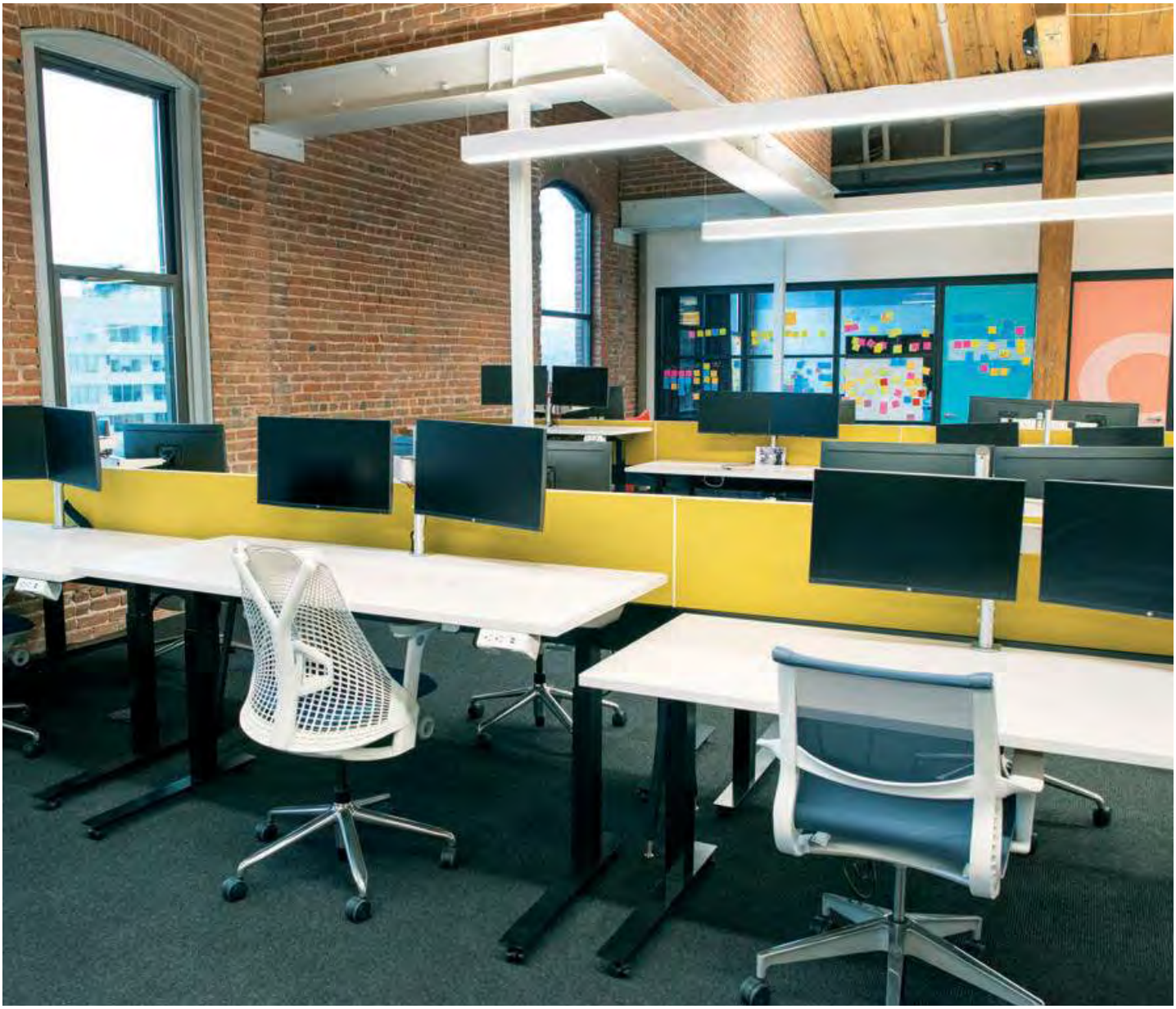

INSTALLATION ACCESSORIES WITH CORNER MODULES

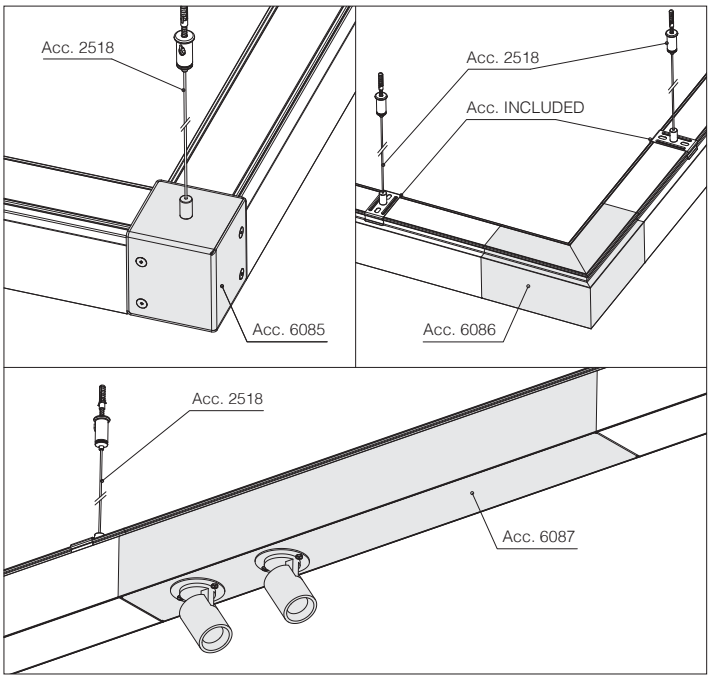

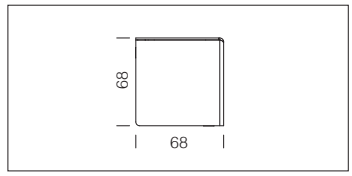

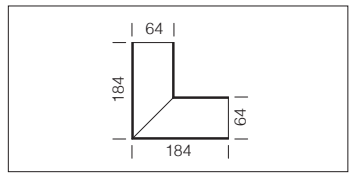

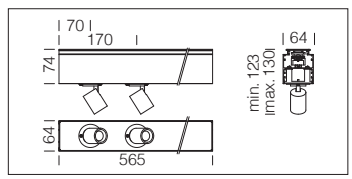

acc. 6085 corner module	
white	132936-00
Allows for corner connections between suspended or ceiling-mounted Madrid fixtures	

acc. 6086 "ALL LIGHT" corner module - 4W	
white	132938-00
Allows Madrid suspension or ceiling-mounted fixture to be installed around a corner; always use acc. 6075 to be purchased separately:	
CEILING	2 acc 6075 (tot: 4 pcs)
SUSPENSION	4 acc 6075 (tot: 8 pcs)

acc. 6087 module with SPOTLIGHT	
white	132942-00
10W - 2x550lm - 3000K - CRI 90 - 36°	
white	132942-68
10W - 2x577lm - 4000K - CRI 90 - 36°	
Module complete with Fosnova spot-light, series ARQ, always use with acc. 6075 to be purchased separately	

GENERAL CHARACTERISTICS

Housing: extruded aluminium complete with end caps.

Diffuser: opal/prismatic polycarbonate..

Coating: polyester resin-based powder coating, UV stabilised.

Équipement: supplied standard, versions complete with mounting brackets for installation as as pendant lamps (acc. 2518-2522 suspensions to be purchased separately) and as ceiling fixtures.

LED: power factor: ≥0,92.
Luminous flux maintenance 80%: 80.000h (L80B10).
Luminous flux maintenance 90%: 50.000h (L90B10).
Photobiological safety class: exempt group

OTHER CHARACTERISTICS

Version equipped with
• opal polycarbonate diffuser ideal for installations in common areas or general room such as homes, hotels, sleeping rooms...
• UGR<19 prismatic polycarbonate diffuser ideal for installations in schools or offices with VDU terminals

UPON REQUEST

Available version with:
• emergency wiring **CLD E** with **sub-code -07.**
• emergency wiring with centralized power supply **CLD EC** with **sub-code -0050.**
• pass-through wiring for continuous line modules with **subcode -0072:** supplied without diffusor, which should be purchased separately with acc. 6076, ideal for continuous and uninterrupted **"ALL LIGHT**" lines.
• black colour version



CONTINUOUS LINE INSTALLATION AND ACCESSORIES

Installation sequence:
1) Unscrew the locking screws and remove the end cap.
2) Insert acc. 6075 junction bracket to be purchased separately (purchase **nr.2** acc. 6075 for *suspension* version)
3) Pair the luminaires until they are aligned, then tighten the locking screws.

acc. 6075 junction brackets
132915-00
Utilize for the suspension/ceiling installation in continuous line of Madrid. Pack containing 2 pcs.

tot 2 pcs

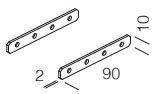

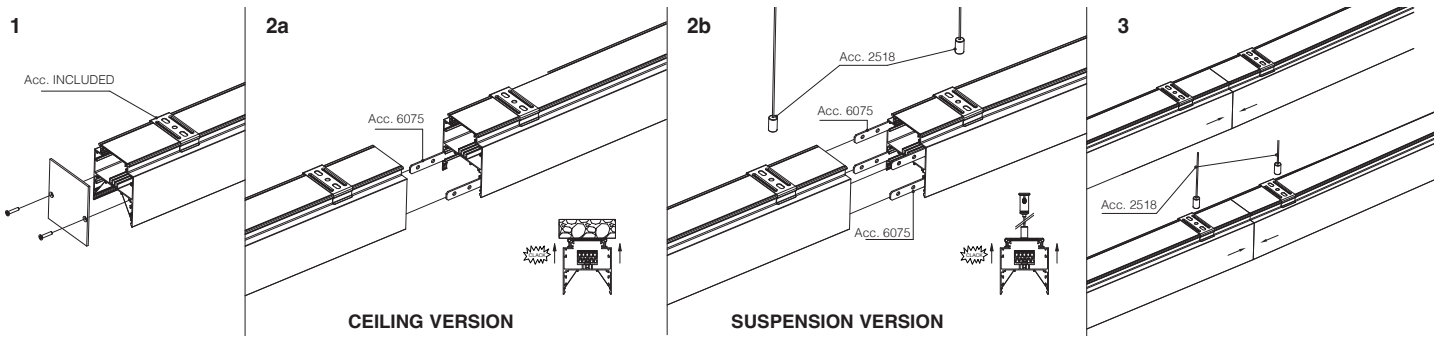

CEILING VERSION **SUSPENSION VERSION**

"**ALL LIGHT**" version with lengths on request and pass-through wiring with subcode **-0072** to be completed with acc. 6076 opal/prismatic diffuser.

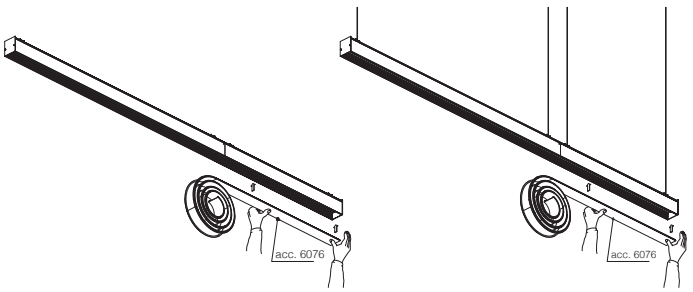

CEILING VERSION **SUSPENSION VERSION**

acc. 6076 opal diffuser	
L = 50m	132916-00
Opal polycarbonate roll must always be used on Madrid for continuous and uninterrupted "all light" lines.	

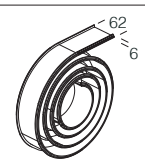

acc. 6076 UGR<19 prismatic diffuser	
L = 50m	132916-00002264
UGR<19 prismatic polycarbonate roll must always be used on Madrid for continuous and uninterrupted "all light" lines.	

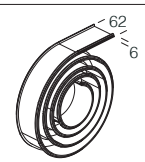

acc. 2518 simple suspension	
galvanized	994019-00
Supplied with steel wire (L=1,50m) and millimetre adjustment device (2pcs).	

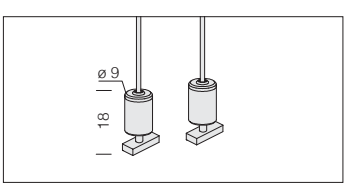

acc. 2522 electrified suspension		
3P	white	994028-00
5P		998047-00
Supplied with steel wire (L = 100cm) and millimetre adjustment device and power cord. Max loading: 20Kg. 5P version for **EM or DIMM DALI** wiring.		

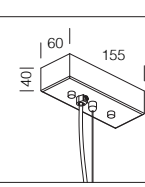

L80 B10 80.000h
L90 B10 50.000h
RG0
U.V.
EM S.A.
-0050 EM-EC
DIMM DIG
LOW FLICKER

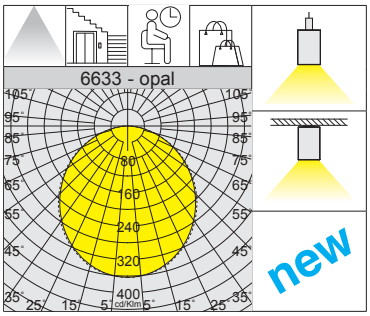





IP40 IK07

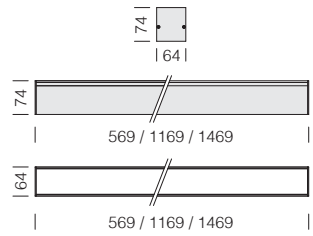

Version with **opal polycarbonate** roll diffuser ideal for installations in common areas or general room such as homes, hotels, sleeping rooms...

6633 Madrid - suspension/ceiling direct light - with opal diffuser

		CLD			CLD D-D (DALI)		LUMEN OUTPUT (tq= 25 °C)
LED	housing	L (mm)	weight	code	code	W tot	K - ølm - CRI
LED	white	569	0.80	133090-00	133090-0041	11	4000K - **1138lm** - CRI>80
		1169	1.40	133091-00	133091-0041	24	4000K - **2673lm** - CRI>80
		1469	1.70	133092-00	133092-0041	31	4000K - **3259lm** - CRI>80

L80 B10 80.000h
L90 B10 50.000h
RG0
U.V.
EM S.A.
-0050 EM-EC
LOW FLICKER

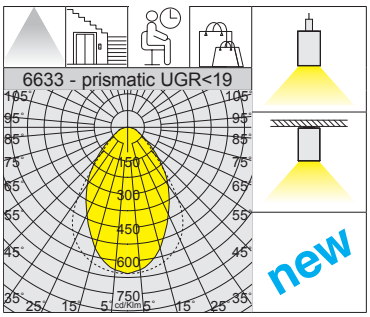





IP40 IK07

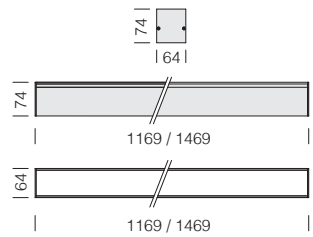

Version with **prismatic polycarbonate** roll diffuser ideal for installations in schools or offices with VDU terminals, environments that require a controlled lighting distribution and maximum visual comfort (UGR<19).

6633 Madrid - DIP SWITCH - suspension/ceiling direct light - with UGR<19 prismatic diffuser

		CLD					LUMEN OUTPUT (tq= 25 °C)
LED	corpo	L (mm)	peso	codice	I out	W tot	K - ølm - CRI
LED	white	1169	1.40	133093-00	***380***	24	4000K - **2760lm** - CRI>80
LED	white	1469	1.70	133094-00	***500***	31	4000K - **3450lm** - CRI>80

DIP SWITCH SETTING		
		LUMEN OUTPUT (tq= 25 °C)
I out	W tot	K - ølm - CRI
200	*13	4000K - 1495lm - CRI>80
260	*17	4000K - 1955lm - CRI>80
380	***24***	*4000K - 2760lm - CRI>80*

DIP SWITCH SETTING		
		LUMEN OUTPUT (tq= 25 °C)
I out	W tot	K - ølm - CRI
250	*16	4000K - 1785lm - CRI>80
340	21	4000K - 2340lm - CRI>80
500	***31***	*4000K - 3450lm - CRI>80*

IP40 IK07

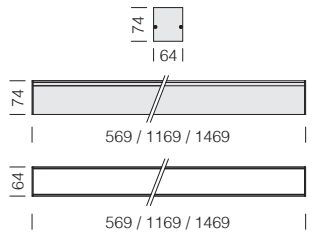



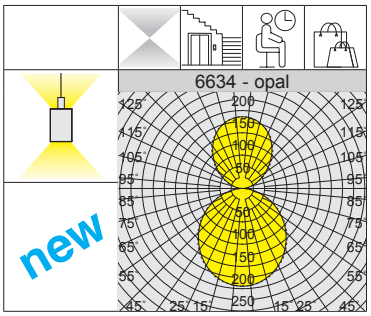

L80 B10 80.000h

L90 B10 50.000h

RG0

U.V.

EM S.A.

-0050 EM-EC

DIMM DIG

LOW FLICKER

Version with **opal polycarbonate** roll diffuser ideal for installations in common areas or general room such as homes, hotels, sleeping rooms...

6634 Madrid - suspension - direct/indirect light - with opal diffuser

		CLD			CLD D-D (DALI)		LUMEN USCENTI (tq= 25 °C)
LED	housing	L (mm)	weight	code	code	W tot	K - ølm - CRI
LED	white	569	0.90	133095-00	133095-0041	21	4000K - **2036lm** - CRI>80
		1169	1.60	133096-00	133096-0041	36	4000K - **3490lm** - CRI>80
		1469	1.90	133097-00	133097-0041	54	4000K - **5080lm** - CRI>80

Supplied standard with **separate switching function**.

IP40 IK07

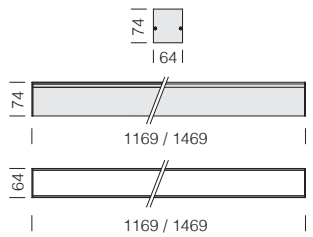



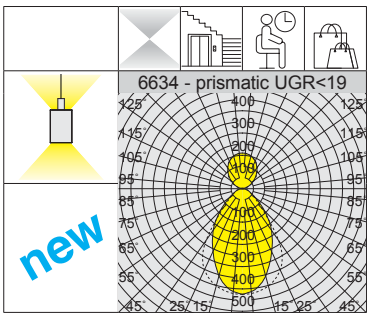

L80 B10 80.000h

L90 B10 50.000h

RG0

U.V.

EM S.A.

-0050 EM-EC

DIMM DIG

LOW FLICKER

Version with **prismatic polycarbonate** roll diffuser ideal for installations in schools or offices with VDU terminals, environments that require a controlled lighting distribution and maximum visual comfort (UGR<19).

6634 Madrid - suspension - direct/indirect light - with UGR<19 prismatic diffuser

		CLD			CLD D-D (DALI)		LUMEN OUTPUT (tq= 25 °C)
LED	housing	L (mm)	weight	code	code	W tot	K - ølm - CRI
LED	white	1169	1.60	133064-00	133064-0041	36	4000K - **3505lm** - CRI>80
		1469	1.90	133065-00	133065-0041	54	4000K - **5101lm** - CRI>80

Supplied standard with **separate switching function**.



**Lumen output with prismatic roll diffuser.

GENERAL CHARACTERISTICS

Housing: extruded aluminium.

Roll diffuser : opal/prismatic polycarbonate (to be purchased separately).

Coating: polyester resin-based powder coating, UV stabilised.

Équipement: supplied standard, versions complete with mounting brackets for installation as pendant lamps (suspensions to be purchased separately) and as ceiling fixtures.

LED: power factor: ≥0,92.
Luminous flux maintenance 80%: 80.000h (L80B10).
Luminous flux maintenance 90%: 50.000h (L90B10).
Photobiological safety class: exempt group.

Upon request version:
- emergency wiring **CLD E** with **sub-code -07.**
- emergency wiring with centralized power supply **CLD EC** with **sub-code -0050.**
- **CLD D-D (DALI)** wiring with **sub-code -0041.**
- black colour version.

To be completed with acc 6072 end cap

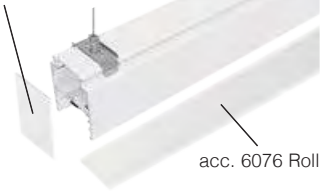

L80 B10 80.000h

L90 B10 50.000h

RGO

U.V.

EM S.A.

-0050 EM-EC

DIMM DIG

LOW FLICKER

3000K

4000K

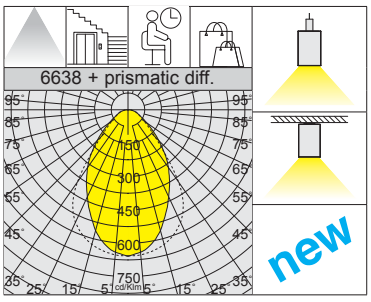

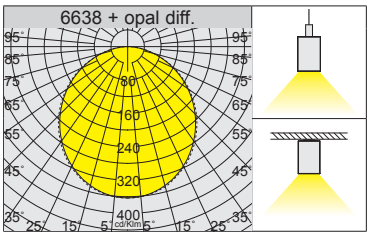



IP40 IK07 if complete with roll diffuser

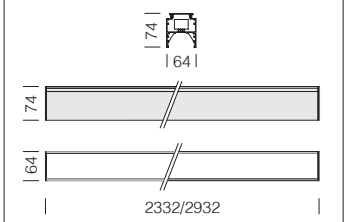

6638 Madrid "INFINITY" DIP SWITCH - suspension/ceiling - to be completed with roll diffuser

		CLD					**LUMEN USCENTI (tq= 25 °C)
LED	colour	L (mm)	weight	code	I out	W tot	K - ølm - CRI
LED	white	2332	3.50	133074-0072	***490***	30	4000K - **3310lm** - CRI>80
				133074-3972			3000K - **3145lm** - CRI>80
LED	white	2932	4.50	133075-0072	***750***	45	4000K - **4410lm** - CRI>80
				133075-3972			3000K - **4190lm** - CRI>80

DIP SWITCH SETTING		
		LUMEN OUTPUT (tq= 25 °C)
I out	W tot	K - ølm - CRI
350	*22	4000K - 2400lm - CRI>80
400	25	4000K - 2760lm - CRI>80
490	***30***	*4000K - 3310lm - CRI>80*

DIP SWITCH SETTING		
		LUMEN OUTPUT (tq= 25 °C)
I out	W tot	K - ølm - CRI
350	*22	3000K - 2280lm - CRI>80
400	25	3000K - 2622lm - CRI>80
490	***30***	*3000K - 3145lm - CRI>80*

DIP SWITCH SETTING		
		LUMEN OUTPUT (tq= 25 °C)
I out	W tot	K - ølm - CRI
500	*29	4000K - 2840lm - CRI>80
600	36	4000K - 3530lm - CRI>80
750	***45***	*4000K - 4410lm - CRI>80*

DIP SWITCH SETTING		
		LUMEN OUTPUT (tq= 25 °C)
I out	W tot	K - ølm - CRI
500	*29	3000K - 2698lm - CRI>80
600	36	3000K - 3354m - CRI>80
750	***45***	*3000K - 4190m - CRI>80*

"INFINITY" light module that enables continuous and uninterrupted light lines. To be completed with:
- end cap and brackets for continuous light line
- **UGR<19 prismatic polycarbonate roll** diffuser ideal for installations in schools or offices with VDU terminals
- **opal polycarbonate roll** diffuser ideal for installations in common areas or general room such as homes, hotels, sleeping rooms...

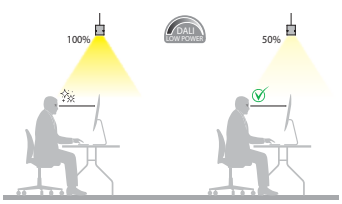

ACCESSORIES AND CONTINUOUS LINE INSTALLATION

acc. 2518 simple suspension	
galvanized	994019-00
Supplied with steel wire (L=1,50m) and millimetre adjustment device (2pcs).	

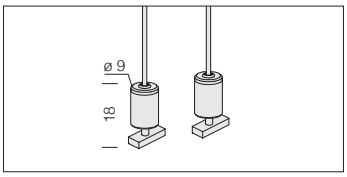

acc. 2522 electrified suspension		
3P	white	994028-00
5P		998047-00
Supplied with steel wire (L = 100cm) and millimetre adjustment device and power cord. Max loading: 20Kg. 5P version for **EM or DIMM DALI** wiring.		

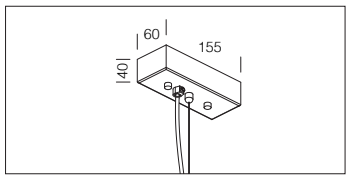

acc. 6072 End cap	
white	132912-00
To be used to close the two terminal ends. 2pcs	

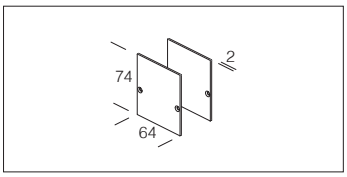

Installation sequence:
1) Insert acc. junction bracket to be purchased separately (purchase **nr.2** acc. junction bracket for *suspension* version)
2) Pair the luminaires until they are aligned, then tighten the locking screws.
3) Screw the locking screws and lock the end cap.

acc. 6075 Junction brackets
132915-00
Utilize for the suspension/ceiling installation in continuous line of Sintesi.

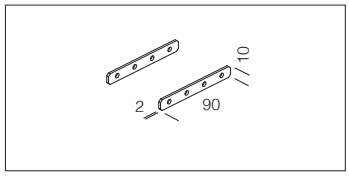

CEILING VERSION

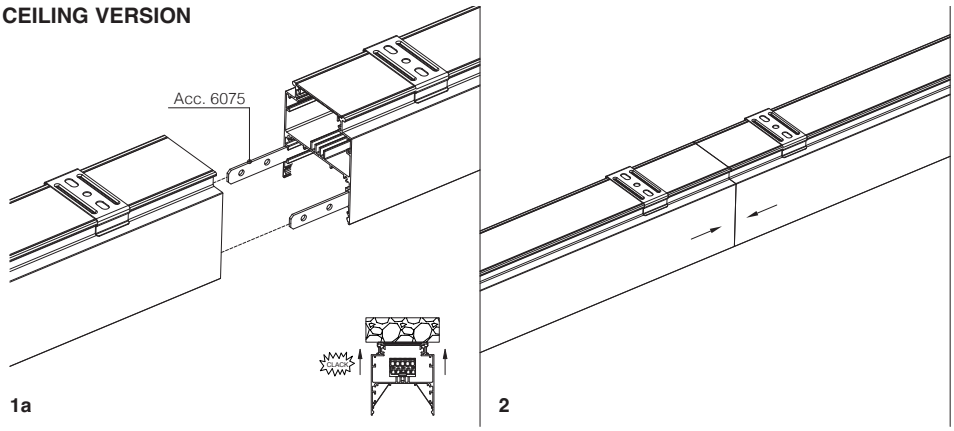

SUSPENSION VERSION

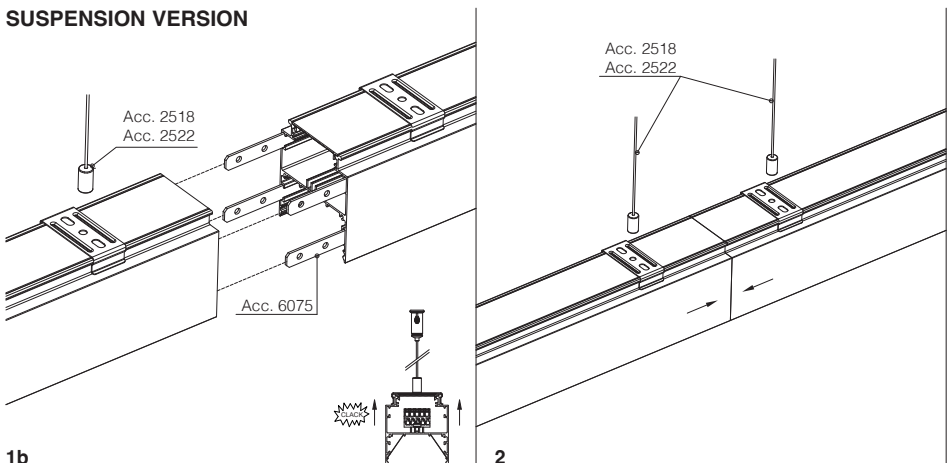

Madrid "INFINITY" with pass-through wiring with subcode **-0072** to be completed with acc. opal/prismatic diffuser Roll.

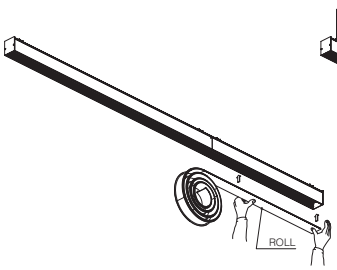

CEILING VERSION

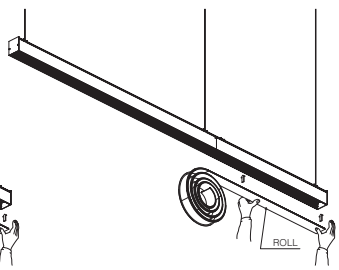

SUSPENSION VERSION

acc. 6076 opal diffuser	
L = 50m	132916-00
Opal polycarbonate roll must always be used on Madrid for continuous and uninterrupted "all light" lines.	

acc. 6076 UGR<19 prismatic diffuser	
L = 50m	132916-00002264
UGR<19 prismatic polycarbonate roll must always be used on Madrid for continuous and uninterrupted "all light" lines.	

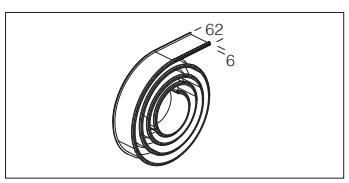

Roll order example

Madrid "INFINITY"	Roll
L = 2332mm (x 21 pcs)	L = 50m
L = 2932mm (x 16 pcs)	L = 50m



GENERAL CHARACTERISTICS

Housing: extruded aluminium complete with end caps.

Diffuser: opal polycarbonate.

Equipment: supplied standard, recessed version comes with springs.

LED: power factor: ≥0,92.
Luminous flux maintenance 80%: 80.000h (L80B10).
Luminous flux maintenance 90%: 50.000h (L90B10).
Photobiological safety class: exempt group.

Upon request version with:
- emergency wiring **CLD E** with **sub-code -07.**
- emergency wiring with centralized power supply **CLD EC** with **sub-code -0050.**
- **CLD D-D (DALI)** wiring with **sub-code -0041.**
- version with LOOP-IN wiring for continuous line modules with **sub-code -52:** supplied without diffusor, which should be purchased separately with acc. 6076, ideal for continuous and uninterrupted **"ALL LIGHT"** lines.
- black colour version

L90 B10 50.000h

L80 B10 80.000h

RG0

U.V.

EM S.A.

-0050 EM-EC

DIMM DIG

LOW FLICKER

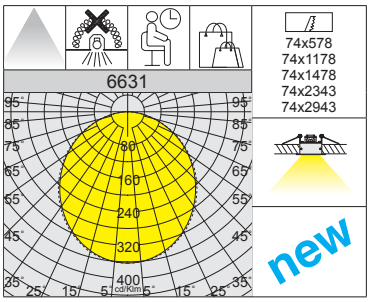

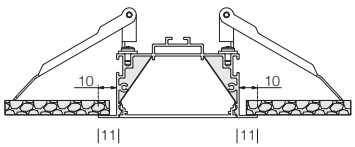

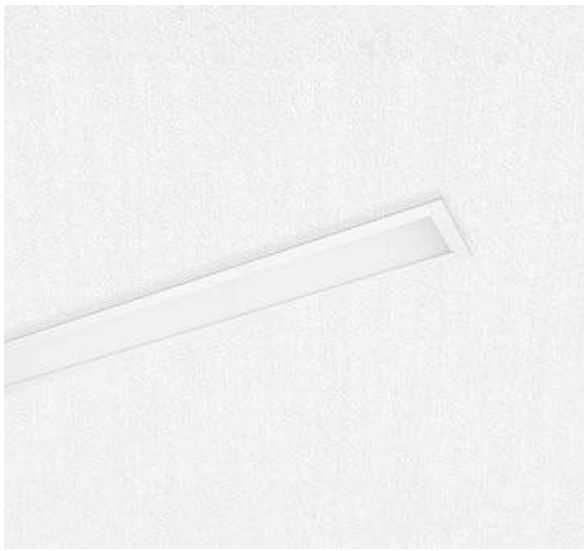

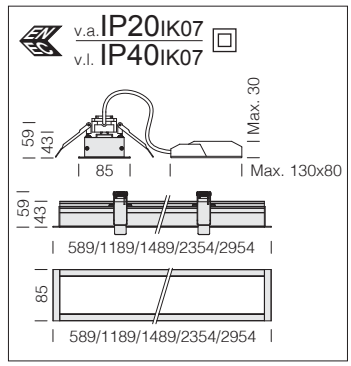

Version with **opal polycarbonate** roll diffuser ideal for installations in common areas or general room such as homes, hotels, sleeping rooms...

6631 Madrid E - recessed - with opal diffuser

		CLD				LUMEN OUTPUT (tq= 25 °C)
LED	housing	L (mm)	weight	code	W tot	K - ølm - CRI
LED	white	589	0.50	133029-00	11	4000K - **1070lm** - CRI>80
		1189	0.90	133030-00	25	4000K - **2603lm** - CRI>80
		1489	1.10	133031-00	32	4000K - **3346lm** - CRI>80
		2354	2.00	133084-00	48	4000K - **4800lm** - CRI>80
		2954	2.20	133085-00	60	4000K - **6000lm** - CRI>80

CONTINUOUS LINE INSTALLATION AND ACCESSORIES

Installation sequence:
1) Unscrew the locking screws and remove the end cap.
2) Insert acc. 6075 junction bracket to be purchased separately.
3) Pair the luminaires until they are aligned, then tighten the locking screws.

acc. 6075 junction brackets
132915-00
Utilize for the recessed installation in continuous line of Madrid E.

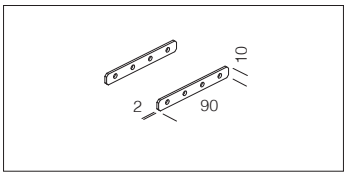

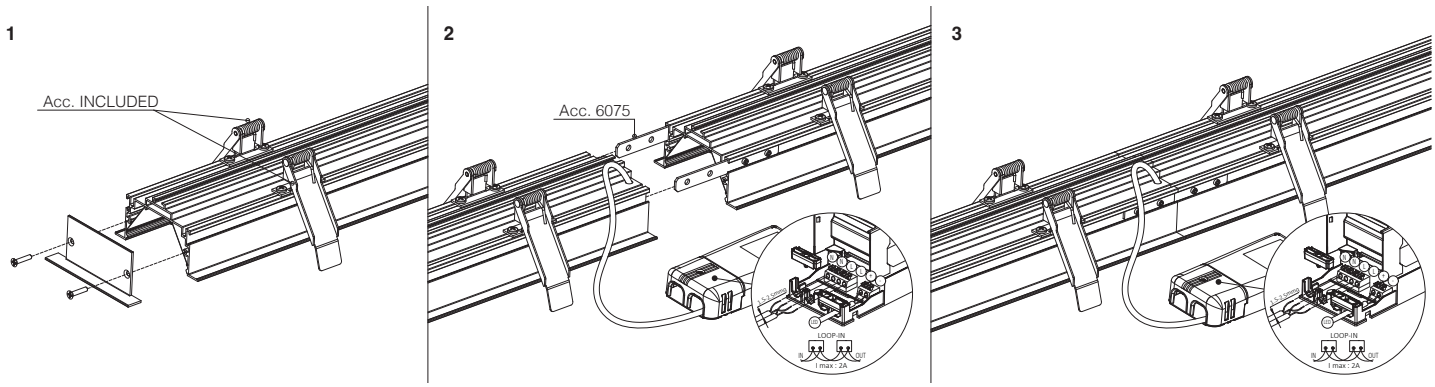

"**ALL LIGHT**" version with lengths on request and LOOP-IN wiring with **sub-code -52** to be completed with acc. 6076 opal diffuser.

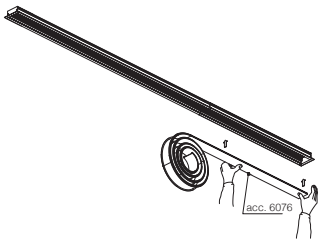

acc. 6076 opal diffuser	
L = 50m	132916-00
Opal polycarbonate roll must always be used on Madrid E for continuous and uninterrupted "all light" lines. Upon request, UGR<19 prismatic roll is available.	

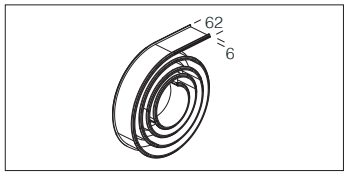

INSTALLATION ACCESSORIES WITH CORNER MODULES

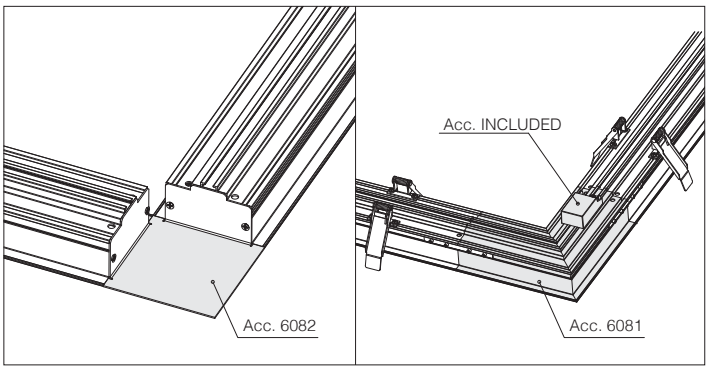

acc. 6082 corner module	
white	132932-00
Allows for corner connections between recessed-mounted Madrid fixtures	

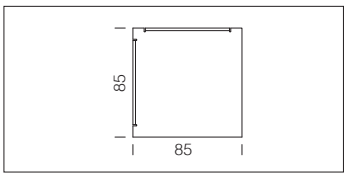

acc. 6081 "ALL LIGHT" corner module - 4W	
white	132934-00
Allows Madrid recessed-mounted fixture to be installed around a corner; always use acc. 6075 to be purchased separately	

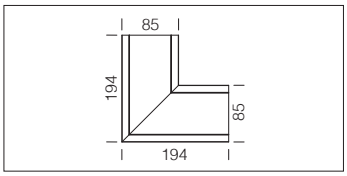





GENERAL CHARACTERISTICS

Housing: in extruded aluminium with closing ends.

Diffuser: in shatter-proof, self-extinguishing and UV-stabilised V2 polycarbonate. Smooth and dust-proof on the outside, and multiple grooves on the inside to increase light distribution.

Coating: smooth, white powder coating.

Equipment: silicone rubber gasket; outer screws in stainless steel.

LED: power factor ≥0.9.
Luminous flux maintenance 90%: 50.000h (L90B10).
Photobiological safety class: exempt group.

OTHER CHARACTERISTICS

LOW FLICKER

Product with a very low flicker; uniform light for greater eye protection.

EM S.A.

EM: subcode -07

LED EM



OTHER INFORMATION

Suitable for mounting in continuous line with **sub-code -0072**.



UPON REQUEST

Built-in RADAR SENSOR (sub-code -19): is an automatic sensor that immediately sense the presence of people's movements and anyone walking past. When there is movement within the sensor's detection range, the light will remain ON. When no further movement is detected, the light will switch OFF after a pre-set time.

-0050 EM-EC

Version **CLD EC** wiring with **subcode -0050:** permanently mounted fixture, operating in AC/DC mode, with centralized emergency device, not incorporated into the fixture.

INSTALLATION AND ACCESSORIES

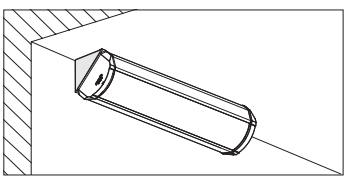

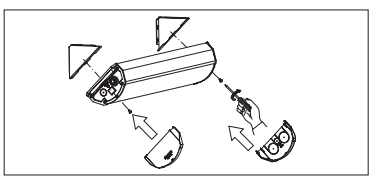

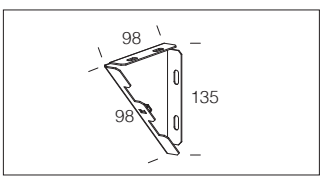

acc. 588 bracket
993971-00
Bracket for wall mounting. 2-pc set.

IP44IK06

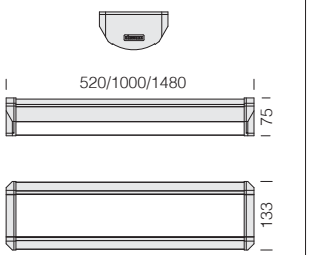

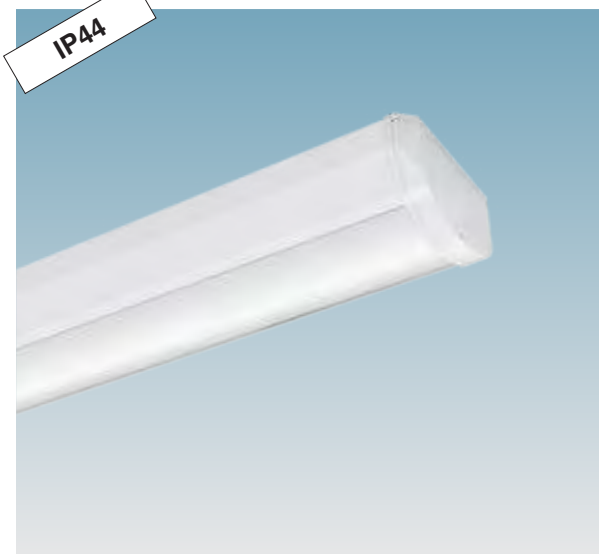

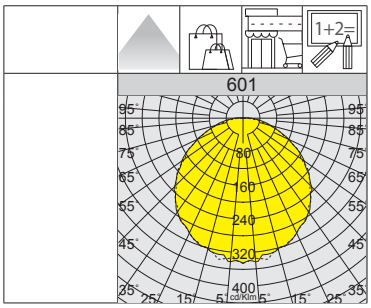

Upon request versions with:
• built-in radar sensor **(subcode -19)**.

• emergency wiring with centralized power supply **CLD EC** with **sub-code -0050.**

601 Disanlens

			CLD		CLD E	CLD D-D (DALI)		LUMEN OUTPUT (tq= 25 °C)
LED	colour	L	weight	code	code	code	W tot	K - ølm - CRI
LED	white	520 mm	1.50	115594-00	115594-07	115594-0041	**15**	4000K - 1947lm - CRI 80
		1000 mm	2.70	115595-00	115595-07	115595-0041	**29**	4000K - 3894lm - CRI 80
		1480 mm	3.90	115596-00	115596-07	115596-0041	**43**	4000K - 5517lm - CRI 80

IP20IK06 ⧈

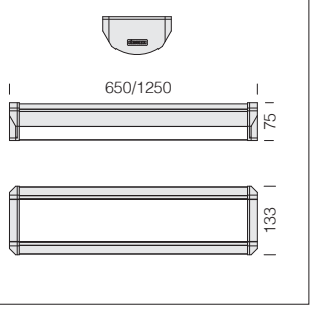

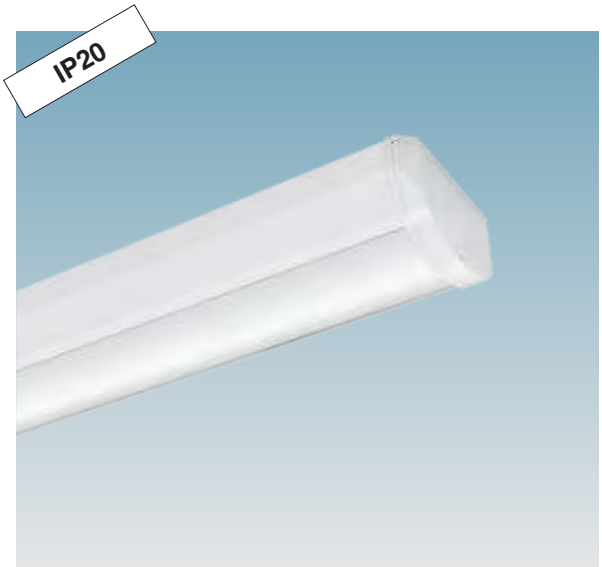

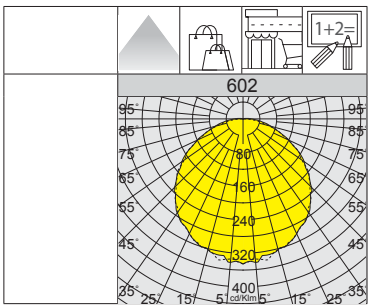

Upon request versions with:
• built-in radar sensor **(subcode -19)**.

• emergency wiring with centralized power supply **CLD EC** with **sub-code -0050.**

602 Disanlens

			CLD		CLD E		LUMEN OUTPUT (tq= 25 °C)
LED	colour	L	weight	code	code	W tot	K - ølm - CRI
LED	white	600 mm	1.50	115597-00	115597-07	**15**	4000K - 1720m - CRI 80
		1200 mm	2.70	115598-00	115598-07	**28**	4000K - 3440m - CRI 80



GENERAL CHARACTERISTICS

The Disanlens ceiling fixture is the ideal solution to ensure maximum visual comfort in places like **classrooms** and offices that require optimal lighting distribution.

Housing: in pre-coated and pre-galvanized sheet; ABS white thread ends with vandal-proof closure system.

Diffuser: in polycarbonate with micro-prismatic finish surface to control lighting distribution.

Equipment: complete with inlet cable gland and spacers to mount the fixture to the ceiling or wall..

LED: power factor ≥0.9.
Luminous flux maintenance 90%: 50.000h (L90B10).
Photobiological safety class: exempt group.

OTHER CHARACTERISTICS

End caps with drop-out prevention/ vandal-proof screws.



DIMM DIG

Standard version **CLD D-D (DALI)** wiring with **subcode -0041:** thanks to pre-programmed settings or a software programme, this type of wiring allows accurate light emission dimming.

OTHER INFORMATION

UGR <19

The UGR (unified glare rating) is an international unified measure developed by the CIE (Commission International de l'Eclairage) to assess the direct glare generated by a lighting system. The European standard regulating the lighting of indoor work places (**UNI-EN 12464-1**) recommends a specific UGR value for different applications ranging between **10 and 30**; **the lower the UGR value, the lower the glare**. The exact value of this index differs by project type because it depends on the position of the luminaires, room characteristics (dimensions, reflections) and on the point of observation of viewers.

LOW FLICKER

Product with a very low flicker; uniform light for greater eye protection.

UPON REQUEST

EM S.A.

EM version subcode -07: only for fixtures in lengths from 1233 mm to 1535 mm.

Built-in RADAR SENSOR (sub-code -19 at an extra price): is an automatic sensor that immediately sense the presence of people's movements and anyone walking past. When there is movement within the sensor's detection range, the light will remain ON. When no further movement is detected, the light will switch OFF after a pre-set time.

INSTALLATION AND ACCESSORIES

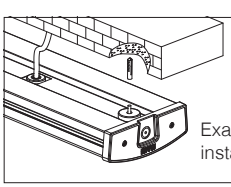

Example ceiling installation.

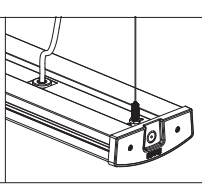

Example of suspended installation with simple suspension acc. 2518.

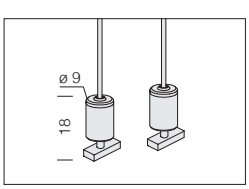

acc. 2518 simple suspension	
galvanized	994019-00
Supplied with steel wire (L=1,50m) and millimetre adjustment device (2pcs).	

*IP40IK06

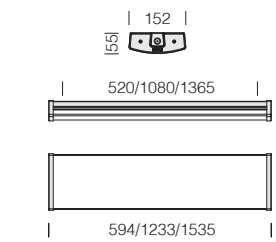

*IP43IK06: **on request** version for ceiling installation.



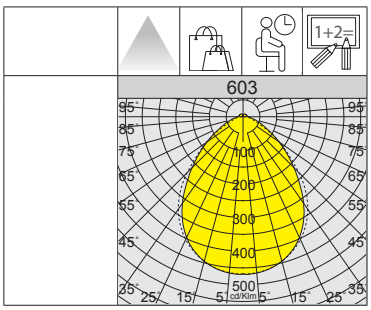

L90 B10 50.000h

RG0

LOW FLICKER

DIMM DIG

UGR <19

603 Disanlens - UGR<19

			CLD		CLD (radar sensor)	CLD D-D (DALI)		LUMEN OUTPUT (tq= 25 °C)
LED	colour	L	weight	code	code	code	W tot	K - ølm - CRI
LED	white	594 mm	1.80	115520-00	115520-19	115520-0041	**12**	4000K - 1500lm - CRI 80
		1233 mm	2.80	115521-00	115521-19	115521-0041	**23**	4000K - 3450lm - CRI 80
		1535 mm	4.10	115522-00	115522-19	115522-0041	**30**	4000K - 4800lm - CRI 80

*IP40IK06

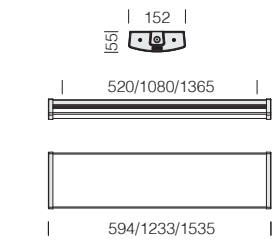

*IP43IK06: **on request** version for ceiling installation.



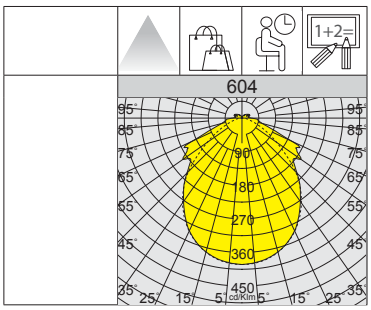

L90 B10 50.000h

RG0

LOW FLICKER

604 Disanlens

			CLD			LUMEN OUTPUT (tq= 25 °C)
LED	colour	L	weight	code	W tot	K - ølm - CRI
LED	white	594 mm	1.30	115532-00	**12**	4000K - 1513lm - CRI 80
		1233 mm	2.20	115534-00	**23**	4000K - 3450lm - CRI 80
		1535 mm	4.10	115535-00	**30**	4000K - 4800lm - CRI 80



GENERAL CHARACTERISTICS

Housing: injection moulded, in grey polycarbonate, vandal resistant, UV stabilized, high mechanical resistance due to the frame reinforced by internal ribbing.

Diffuser: injection moulded, in V2 self-extinguishing polycarbonate, UV stabilized, clear polycarbonate. The external smooth finish facilitates cleaning, essential to maintain maximum lighting efficiency.

Equipment: steel brackets to mount the product as a ceiling fixture lamp. The fixture is secured to the brackets with a quick clamping mechanism.

LED: power factor ≥0.9.
Lumen maintenance at 80%: 60.000h (L80B20).
Lumen maintenance at 90%: 50.000h (L90B10).

L80 B20 60.000h

L90 B10 50.000h

RG0

+40 C° -30

NO

LOW FLICKER

CCT SWITCH

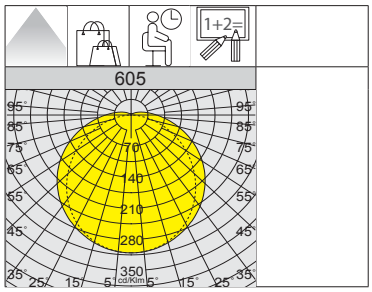

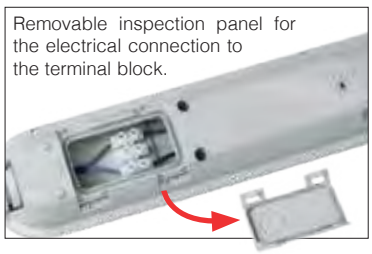



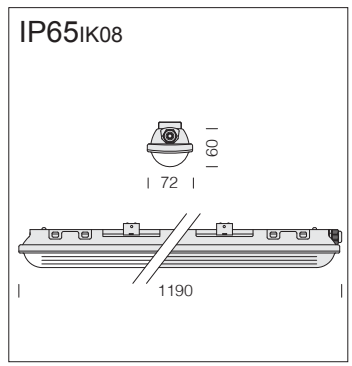

ALL LIGHT: no glare. The special surface finish of the diffuser allows light to escape, creating an "all light" effect. The fluted diffuser spreads light evenly without leaving dark areas.



605 Disanlens - CCT SWITCH						
			CLD			LUMEN OUTPUT (tq= 25 °C)
LED	colour	L	weight	code	W tot	K - ølm - CRI
LED	grey	1190	3.30	115561-00	**35**	3000K - 5280lm - CRI>80
						4000K - 5580lm - CRI>80
						6500K - 5431lm - CRI>80

The main feature of this luminaire is the "colour-changing" technology: with the built-in selector switch positioned on the fixture's body, you can choose the desired colour temperature (3000K-4000K-6500K), adjusting its emission to most lighting installations.



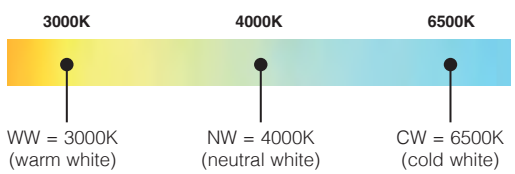

IP40IK08

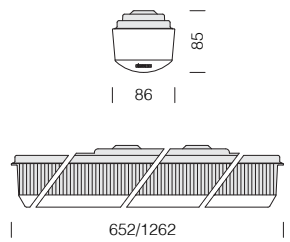

GENERAL CHARACTERISTICS

Housing: in sheet steel, pressed in one piece.

Reflector: in steel, white, UV-stabilised.

Diffuser: in clear polycarbonate, microprismatic inside, anti-dazzle, vandal resistant and V2 self-extinguishing, UV-stabilised, smooth outside, dustproof.

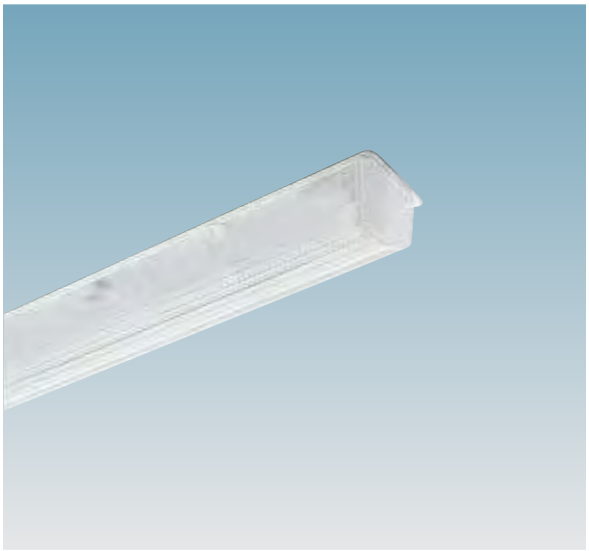



As standard, it comes with lamp holder with G13 connector; it can be installed directly of LED lamp (230VAC).

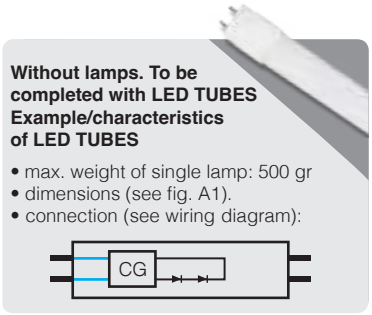

601 Disanlens - polycarbonate diffuser

		CLD S			
LED	colour	weight	L	code	W max
LED 1x	white	0.80	652	115570-03	**1x10**
		1.40	1262	115571-03	**1x16**

LED lamp dimensions	
L (mm)	A1
A1 = 590mm	
A1 = 1200mm	

IP40IK08

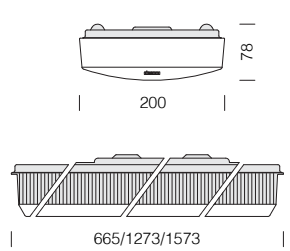

GENERAL CHARACTERISTICS

Housing: in sheet steel, pressed in one piece.

Reflector: in steel, white, UV-stabilised.

Diffuser: in clear polycarbonate, microprismatic inside, anti-dazzle, vandal resistant and V2 self-extinguishing, UV-stabilised, smooth outside, dustproof.

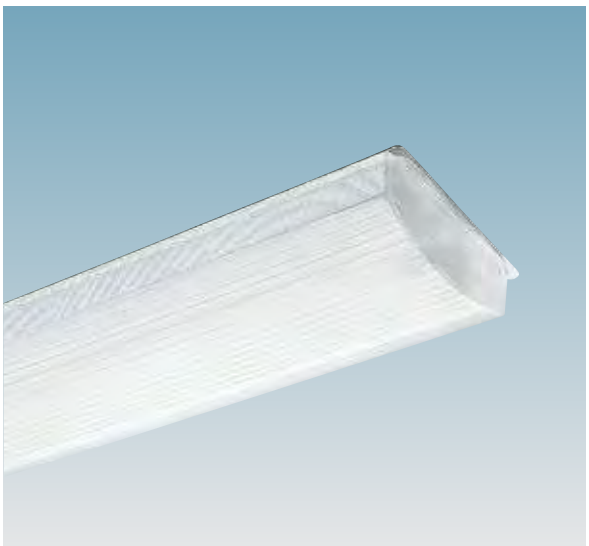



As standard, it comes with lamp holder with G13 connector; it can be installed directly of LED lamp (230VAC).

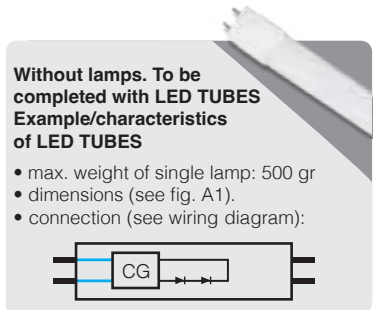

601 Disanlens - polycarbonate diffuser

		CLD S			
LED	colour	weight	L	code	W max
LED 2x	white	1.50	665	115572-03	**2x10**
		3.00	1273	115573-03	**2x16**
		3.50	1573	115574-03	**2x24**

LED lamp dimensions	
L (mm)	A1
A1 = 590mm	
A1 = 1200mm	
A1 = 1500mm	

INSTALLATION

Ceiling fixture length:
1x10= 86 x 652
2x10= 200 x 665
1x16= 86 x1262
2x16= 200 x1273
2x24= 200 x1573

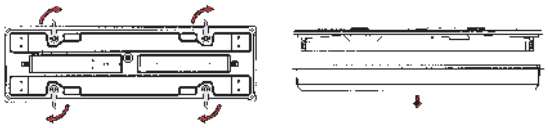

Spacing for ceiling mounting (A):
1x10= 400 mm
2x10= 550 mm
1x16= 740 mm
2x16= 1080 mm
2x24= 1080 mm

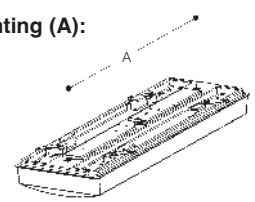

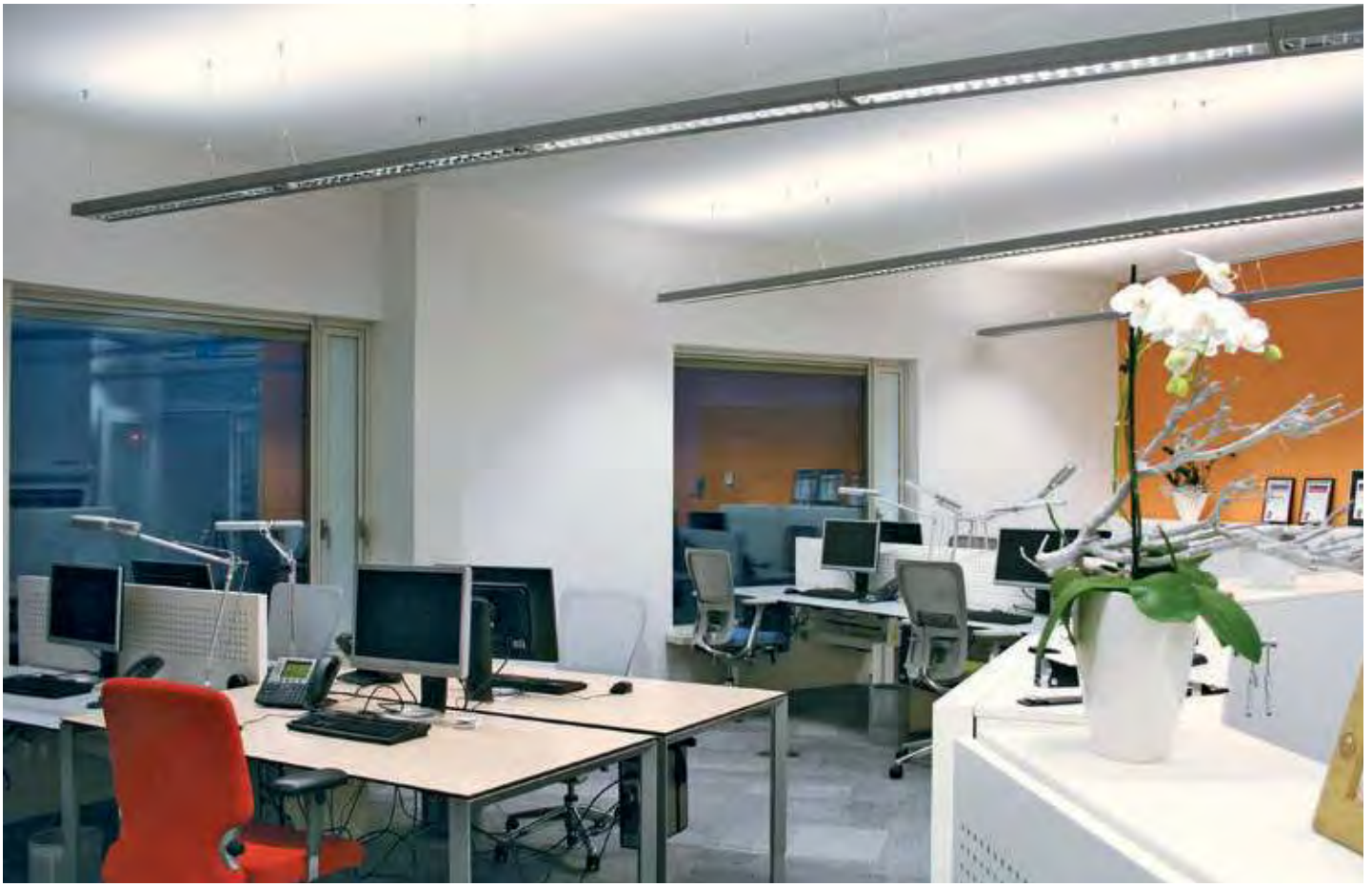

GENERAL CHARACTERISTICS

Housing: extruded aluminium with die-cast end caps.

Dark light optics: double parabolic louvres, in high-gloss plated aluminium 99.99. Anti-glare and anti-iridescence, very low luminance. PVD treatment to increase light efficiency.

Coating: UV-stabilized polyester resin powder coating.

Standard supply: the snap-on optic unit remains attached by safety cords.

LED: power factor: 0,95.
Luminous flux maintenance 90%: 50.000h (L90B10).
Photobiological safety class: exempt group.

OTHER CHARACTERISTICS



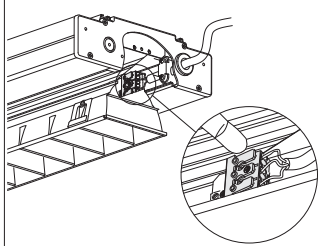

Quick connection for easy and rapid installation and maintenance.

OTHER INFORMATION

UGR <19

The UGR (unified glare rating) is an international unified measure developed by the CIE (Commission International de l'Eclairage) to assess the direct glare generated by a lighting system. The European standard regulating the lighting of indoor work places (**UNI-EN 12464-1**) recommends a specific UGR value for different applications ranging between **10 and 30**; **the lower the UGR value, the lower the glare**. The exact value of this index differs by project type because it depends on the position of the luminaires, room characteristics (dimensions, reflections) and on the point of observation of viewers.

LOW FLICKER

Product with a very low flicker; uniform light for greater eye protection.

ECONOMIC BENEFITS



The economic benefits of the new technologies alone are not able to ensure efficiency without the combination of other important advantages. The most significant one concerns the quality of light. New lighting fixtures will make you live and work better. The picture shows how lighting quality is the result of a set of elements connected to visual perception. These elements include visual performance, associated with the level of lighting, glare limitation, visual comfort, which is determined by the correct distribution of light and by a good colour rendering and ambient lighting, which depends on the colour of the light source and on light beam direction. In other words, a good lighting system is one that ensures the right amount of light, without producing glare and where colours can be admired almost as if they were viewed under natural light.

IP20IK07

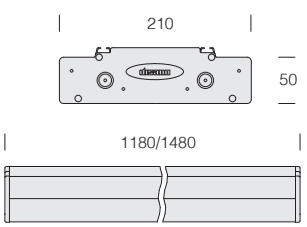

Fixture supplied as standard with pass-through wiring for **continuous line mounting**

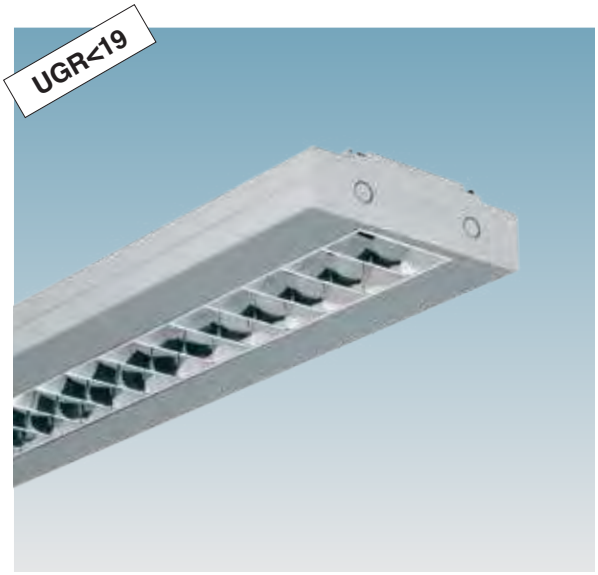

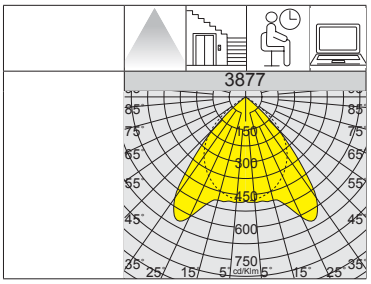

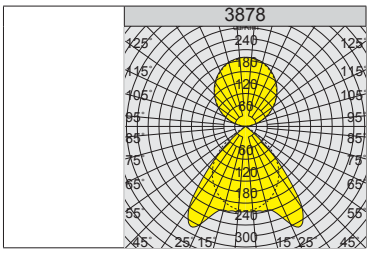

L90 B10 50.000h

RG0

DARK 65°< 500 LIGHT

U.V.

LOW FLICKER

UGR <19

3877 Channel - direct light					
		CLD			LUMEN OUTPUT (tq= 25 °C)
LED	colour	weight	code	W tot	K - ølm - CRI
LED	white	4.70	145170-00	**27**	4000K - 2681lm - CRI 80
	s. silver		145171-00		
LED	white	5.80	145172-00	**34**	4000K - 3352lm - CRI 80
	s. silver		145173-00		

3878 Channel - direct/indirect light					
		CLD			LUMEN OUTPUT (tq= 25 °C)
LED	colour	weight	code	W tot	K - ølm - CRI
LED	white	4.50	145180-00	**53**	4000K - 5554lm - CRI 80
	s. silver		145181-00		
LED	white	6.00	145182-00	**67**	4000K - 6943lm - CRI 80
	s. silver		145183-00		

ACCESSORIES

acc. 376 ceiling mounting unit	
galvanized	145151-00
For direct ceiling installation. Only for equipment with direct light. **2 per pack.**	

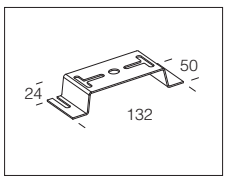

acc. 2291 wall mounting unit	
galvanized	143998-00
Galvanized sheet steel brackets. To install the lighting fixture directly onto wall surfaces. **2 per pack.**	

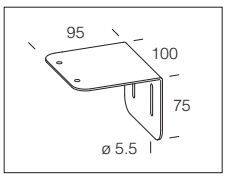

acc. 2290 linear joint	
zama	143997-00
2 per pack.	

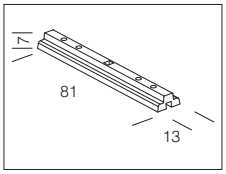

acc. 2292 reinforcement plate joint	
m. silver	143999-00
To be used as a steel reinforcement in a continuous line. Be used for the row with 3 suspensions every 2 ceiling lights.	

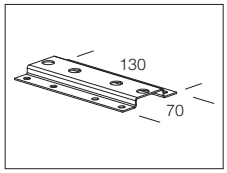

acc. 2513 suspension	
m. silver	993917-00

acc. 2514 powered suspension - 3 poles	
m. silver	993919-00

Max load: 20 Kg - Cm 175

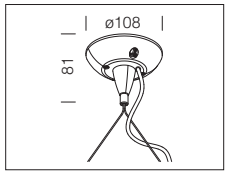

acc. 395 "S1" module		
s. silver	1180	145081-00
white		145090-00
s. silver	1480	145082-00
white		145091-00

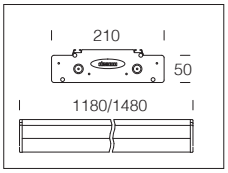

acc. 2518 simple suspension	
galvanized	994019-00
Supplied with steel wire (L=1,50m) and millimetre adjustment device (2pcs).	

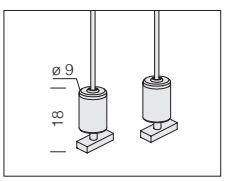



GENERAL CHARACTERISTICS

Housing/Frame: in die-cast aluminium with cooling fins integrated into the cover.

Optics: in polycarbonate, highly resistant to temperature and UV radiation.

Coating: the fully automated powder-coating cycle involves a polyester-based, salt-spray corrosion-resistant and UV-stabilised paint.

Standard supply: the fixture is equipped with folding suspension hook and a bracket for ceiling mounting, waterproof connector for quick installation with **no need to open the fixture;** external screws and bolts in stainless steel. temperature control inside the device with automatic resetting.

OTHER CHARACTERISTICS

SURGE

Electronic safety device to protect the LED module and the related ballast compliant with EN 61547. It works in two modes:
- differential mode: surge between power cables and between the phase and neutral.
- common mode: surge between power, L/N and ground cables or between the fixture's body if it is of class II and installed on a metal pole.

LOW FLICKER

Product with a very low flicker; uniform light for greater eye protection.

OTHER INFORMATION



Nikos is the ideal choice for achieving optimal lighting performance without waste in environments where maximum power is not required. As standard, it is equipped with three selector switches to adjust colour temperature, total power, and light beam angle, allowing it to adapt perfectly to different lighting needs.

UPON REQUEST

Possibility of centralized lighting point control or via **external** presence/lighting sensors (see chapter *Lighting management systems and recommendations*).

Nikos is characterised by a **functional design** that allows for easy installation in any environment, as well as the **option to select** the light beam angle (60° - 90° - 110°) using the dedicated switch.



The heat dissipation system was designed to allow LED operation at adequate temperatures and guarantee excellent performance/efficiency and long life.



ACCESSORIES AND INSTALLATION

Standard foldable suspension hook: allows quick connection to any chain suspension system.

Standard steel mounting bracket: enables quick and easy installation of the fixture to ceiling surfaces.

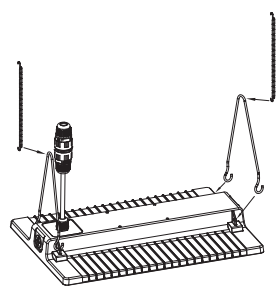

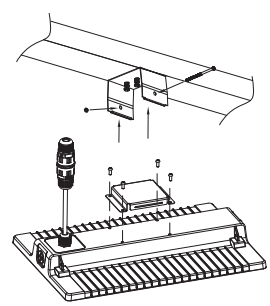

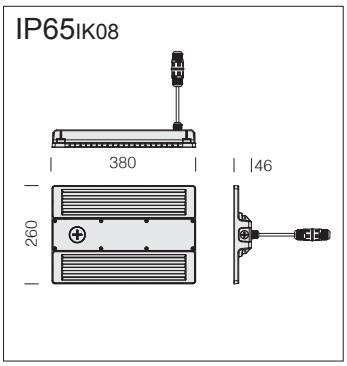



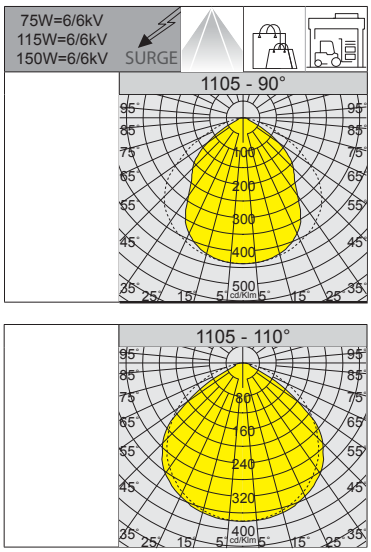



LED: power factor ≥0.9.
Luminous flux maintenance 80%: 80.000h (L80B20).
Luminous flux maintenance 90%: 50.000h (L90B10).

1105 Nikos - CCT / POWER / BEAM ANGLE SWITCH

		CLD			LUMEN OUTPUT (tq= 25 °C)		
LED	colour	weight	code	W tot	K - ølm - CRI - degrees	K - ølm - CRI - degrees	K - ølm - CRI - degrees
LED	RAL 7021	2.00	321565-00	**75**	3000K - 11599lm - CRI>80 - 60°	3000K - 11699lm - CRI>80 - 90°	3000K - 11703lm - CRI>80 - 110°
					4000K - 12209lm - CRI>80 - 60°	4000K - 12315lm - CRI>80 - 90°	4000K - 12319lm - CRI>80 - 110°
				115	3000K - 17540lm - CRI>80 - 60°	3000K - 17692lm - CRI>80 - 90°	3000K - 17697lm - CRI>80 - 110°
					4000K - 18463lm - CRI>80 - 60°	4000K - 18623lm - CRI>80 - 90°	4000K - 18628lm - CRI>80 - 110°
				150	3000K - 22785lm - CRI>80 - 60°	3000K - 22982lm - CRI>80 - 90°	3000K - 22989lm - CRI>80 - 110°
					4000K - 23984lm - CRI>80 - 60°	4000K - 24192lm - CRI>80 - 90°	4000K - 24199lm - CRI>80 - 110°

Nikos - CCT / POWER / BEAM ANGLE SWITCH - In a single body you have a complete lighting fixture that can meet every need with the possibility to adjust the light beam, with 2 colour temperatures in three power wattages, maintaining aesthetic continuity while differentiating the amount of light emitted. All these requirements make it an excellent fixture for the lighting of of shopping centres and showrooms.

CCT SWITCH = with this integrated switch you can select the desired light colour, 3000K - 4000K.

POWER SWITCH = with this integrated switch you can select the fixture's total wattage, 75W - 115W - 150W.

BEAM ANGLE SWITCH = with this integrated switch you can select the type of light beam opening: 60° - 90° - 110°.

• select the type of brightness with 3 output power ranges :
Low = 75W Medium = 115W High = 150W

• select the type of light beam opening:

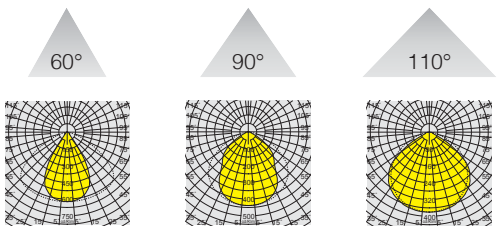

• select 3 different colour temperatures, adjusting to most installations:

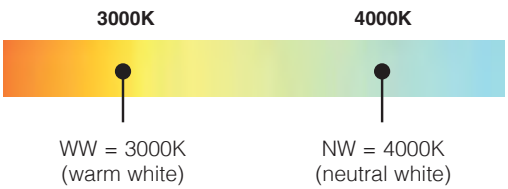

The main feature of this fixture is the new colour-changing technology. With **3 built-in switches** positioned on housing of the fixture, you can:





GENERAL CHARACTERISTICS

Luna is a round indoor luminaire (Ø 300–500–600–800 mm), ideal for accent lighting. It can be easily installed as a ceiling, recessed, or pendant fixture using the supplied accessory, providing elegant and versatile illumination for a variety of architectural settings.
The luminaire operates in two modes, depending on the system:
• DALI dimmable mode (with the driver set to the maximum power indicated) + CCT SWITCH via selectors
• CCT/POWER SWITCH mode allowing colour temperature and power selection via selectors

OTHER CHARACTERISTICS

DIMM DIG

Standard version **CLD D-D (DALI) wiring with subcode -0041**: thanks to pre-programmed settings or a software programme, this type of wiring allows accurate light emission dimming.

CCT POWER

CCT / POWER SWITCH: in a single body frame, you have a fully equipped luminaire designed to meet any need, including the possibility to select the desired colour temperature (3000K-4000K-5700K) in 2 power wattages (12W/18W - 28W/40W - 42W/60W - 56W/80W), maintaining aesthetic continuity and differentiating the amount of light emitted.

OTHER INFORMATION

UGR <19

The UGR (unified glare rating) is an international unified measure developed by the CIE (Commission International de l'Eclairage) to assess the direct glare generated by a lighting system. The European standard regulating the lighting of indoor work places (**UNI-EN 12464-1**) recommends a specific UGR value for different applications ranging between **10 and 30**; **the lower the UGR value, the lower the glare**. The exact value of this index differs by project type because it depends on the position of the luminaires, room characteristics (dimensions, reflections) and on the point of observation of viewers.

UPON REQUEST

Possibility of centralized lighting point control or via **external** presence/lighting sensors (see chapter *Lighting management systems and recommendations*).

Equipment: supplied as standard with a bracket for direct ceiling installation.

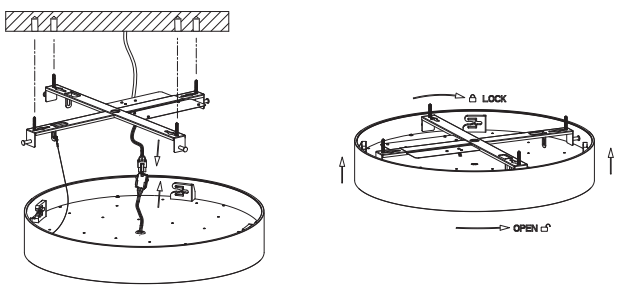

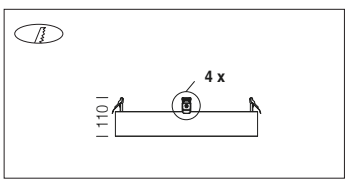

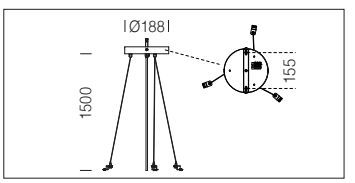

acc. 2032 springs
994015-00
Springs for recessed mounting. Bag containing 4 pieces. Ø 300 = min 275 mm - max 350 mm Ø 500 = min 475 mm - max 550 mm Ø 600 = min 575 mm - max 650 mm Ø 800 = min 775 mm - max 750 mm

acc. 2031 suspension	
white	994012-00
black	994013-00
Complete suspension kit including an installation base, ceiling mounting bracket, and power cable.	

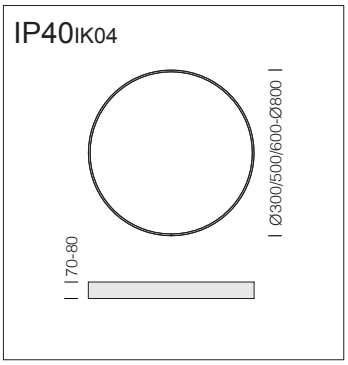



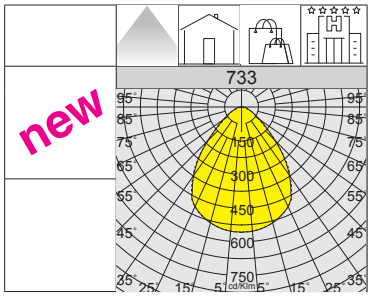

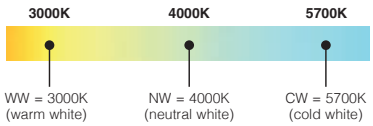

DALI version with the driver set to the maximum indicated power.

Housing: powder-coated aluminium with a microprismatic polycarbonate diffuser that is glare-free, shatterproof, and self-extinguishing.

LED: power factor >0.9.
Luminous flux maintenance 90%: 50.000h (L90B10).

Ø300



Ø500



Ø600



Ø800



733 Luna - Ø300 - DALI + CCT/POWER SWITCH

		CLD D-D (DALI)				LUMEN OUTPUT (tq= 25 °C)
LED	colour	weight	Ø mm	code	W tot	K - ølm - CRI
LED	white	1.50	300	143400-0041	**12**	3000K - **1197lm** - CRI>80
						4000K - **1260lm** - CRI>80
						5700K - **1222lm** - CRI>80
					18	3000K - **1710lm** - CRI>80
						4000K - **1800lm** - CRI>80
						5700K - **1746lm** - CRI>80
LED	black	1.50	300	143401-0041	**12**	3000K - **1197lm** - CRI>80
						4000K - **1260lm** - CRI>80
						5700K - **1222lm** - CRI>80
					18	3000K - **1710lm** - CRI>80
						4000K - **1800lm** - CRI>80
						5700K - **1746lm** - CRI>80

733 Luna - Ø500 - DALI + CCT/POWER SWITCH

		CLD D-D (DALI)				LUMEN OUTPUT (tq= 25 °C)
LED	colour	weight	Ø mm	code	W tot	K - ølm - CRI
LED	white	3.00	500	143410-0041	**28**	3000K - **3059lm** - CRI>80
						4000K - **3220lm** - CRI>80
						5700K - **3123lm** - CRI>80
					40	3000K - **4275lm** - CRI>80
						4000K - **4500lm** - CRI>80
						5700K - **4365lm** - CRI>80
LED	black	3.00	500	143411-0041	**28**	3000K - **3059lm** - CRI>80
						4000K - **3220lm** - CRI>80
						5700K - **3123lm** - CRI>80
					40	3000K - **4275lm** - CRI>80
						4000K - **4500lm** - CRI>80
						5700K - **4365lm** - CRI>80

733 Luna - Ø600 - DALI + CCT/POWER SWITCH

		CLD D-D (DALI)				LUMEN OUTPUT (tq= 25 °C)
LED	colour	weight	Ø mm	code	W tot	K - ølm - CRI
LED	white	4.20	600	143420-0041	**42**	3000K - **4589lm** - CRI>80
						4000K - **4830lm** - CRI>80
						5700K - **4685lm** - CRI>80
					60	3000K - **6270lm** - CRI>80
						4000K - **6600lm** - CRI>80
						5700K - **6402lm** - CRI>80
LED	black	4.20	600	143421-0041	**42**	3000K - **4589lm** - CRI>80
						4000K - **4830lm** - CRI>80
						5700K - **4685lm** - CRI>80
					60	3000K - **6270lm** - CRI>80
						4000K - **6600lm** - CRI>80
						5700K - **6402lm** - CRI>80

733 Luna - Ø800 - DALI + CCT/POWER SWITCH

		CLD D-D (DALI)				LUMEN OUTPUT (tq= 25 °C)
LED	colour	weight	Ø mm	code	W tot	K - ølm - CRI
LED	white	5.80	800	143430-0041	**56**	3000K - **6270lm** - CRI>80
						4000K - **6600lm** - CRI>80
						5700K - **6402lm** - CRI>80
					80	3000K - **8740lm** - CRI>80
						4000K - **9200lm** - CRI>80
						5700K - **8924lm** - CRI>80
LED	black	5.80	800	143431-0041	**56**	3000K - **6270lm** - CRI>80
						4000K - **6600lm** - CRI>80
						5700K - **6402lm** - CRI>80
					80	3000K - **8740lm** - CRI>80
						4000K - **9200lm** - CRI>80
						5700K - **8924lm** - CRI>80

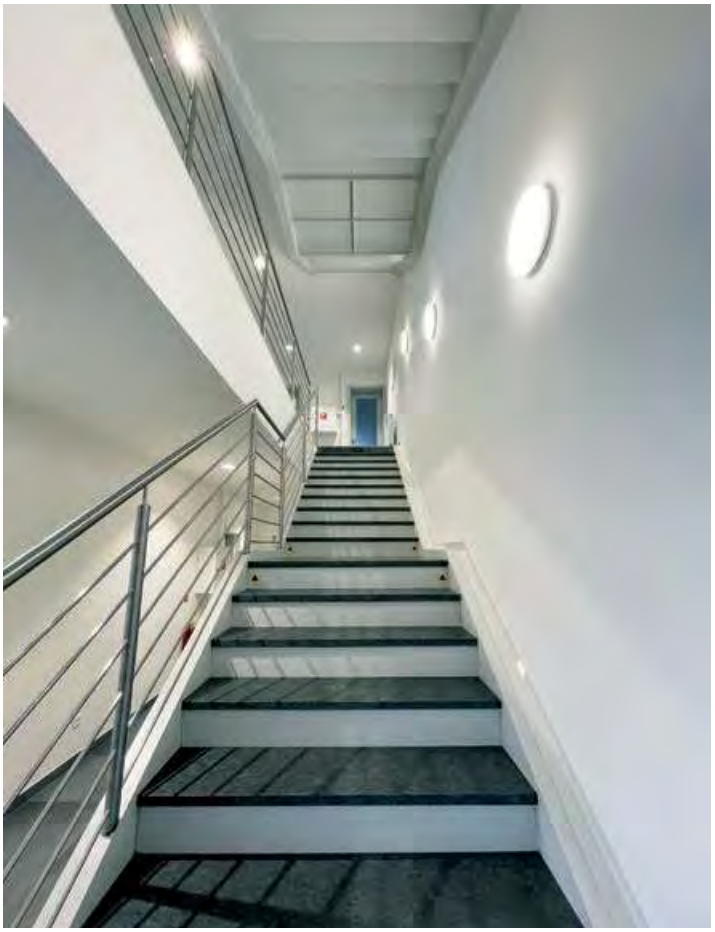

GENERAL CHARACTERISTICS

Oblò 2.0 is Disano's new easy-to-install light fixture featuring a refreshed design and an upgraded technological gear to offer the highest possible energy savings and LED light quality. Oblò 2.0 is a complete range of robust and reliable fixtures for outdoor or indoor wall mounting, and a self-extinguishing IP65-rated polycarbonate housing and double insulation.
The Oblò family includes fixtures of different sizes and with different wattages so that you can choose the most suitable solution for your needs. High quality LED light, with color temperatures of 3000 and 4000K and high color rendering index (CRI ≥83) are always a guarantee of effective, pleasant and safe lighting.

Housing: vandal-resistant, self-extinguishing polycarbonate.

Diffuser: In clear polycarbonate, anti-dazzle, vandal resistant.

LED: power factor >0.9.
Luminous flux maintenance 90%: 50.000h (L90B10).
Photobiological safety class: exempt group.

OTHER CHARACTERISTICS

Equipment: supplied with bracket for ceiling/wall installation.

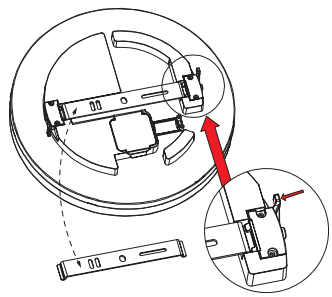

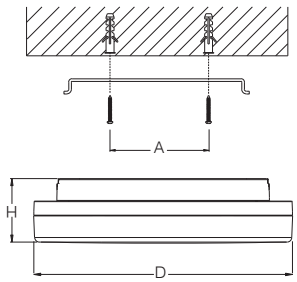

D	H	A
220mm	50mm	65±14mm
280mm	50mm	80±14mm
330mm	50mm	130±20mm

OTHER INFORMATION

Built-in stepDIM RADAR SENSOR (sub-code -19): an electronic device that immediately detects any presence entering its range. When the sensor reads motion inside its range, lights will stay on. When it no longer senses motion and based on the lighting level in its range the sensor will either dim lights after a standby time according to the defined step or turn them off after a pre-programmed time.

The package includes a standard remote control, allowing you to quickly and easily adjust or change parameters after installation, without the need to access the device directly.



ON/OFF	Press the "ON/OFF" button to toggle the light on/off, disabling the sensor. Short press the "M/R" button to activate the sensor.	DIM+ DIM-	Short press the "DIM+/DIM-" button to adjust brightness. The level of brightness will adjust in 5% increments, from 50% to 100%.
M/R	Short press the "M/R" button to restore all parameters back to the last settings. Long press the "M/R" button to reset all parameters to factory settings.	0s 1m 30m ∞	Stand-by period: sets the stand-up time to 0s/1min/30min/+∞.
10% 30%	Stand-by dim level: sets the stand-by dim level to 10%/30%.	5lux 15lux 50lux disable	Daylight sensor: sets daylight threshold to 5lux/15lux/50lux/disabled
25% 50% 100%	Detection Area: sets the detection area to 25%/ 50%/100%.	5s 1m 5m 10m	Hold time: sets the hold time to 5s/1min/5min/10min

EXAMPLE OF SAFETY MODE OPERATION (LIGHTING LEVEL OFF)

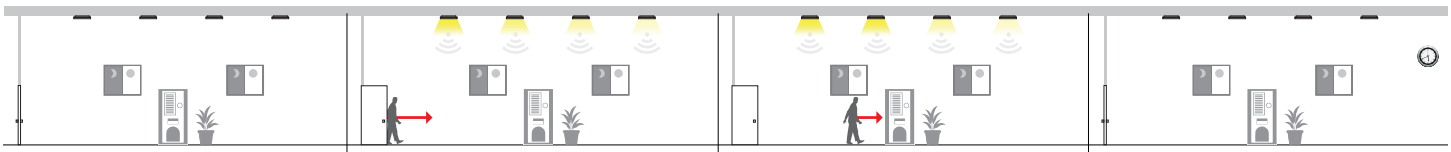

1 Lights stay off when no motion is detected.

2 As soon as the sensor detects motion, it will change the lights to their full brightness (100%).

3 Lights will stay on at their full brightness for a previously set hold time (5sec/1min/5min/10min).

4 The sensor will turn the lights off after a pre-programmed hold time.

EXAMPLE OF ENERGY-SAVING MODE OPERATION (LIGHTING LEVEL OFF)

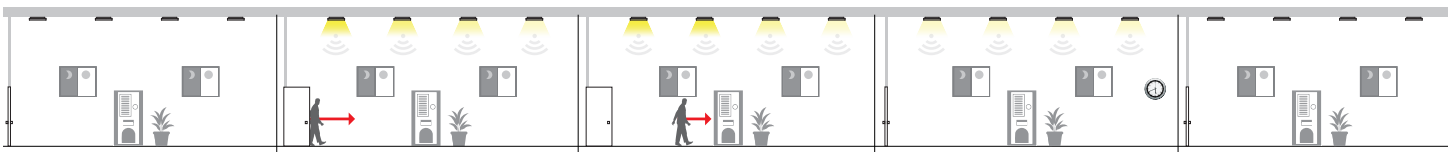

1 Lights stay off when no motion is detected.

2 As soon as the sensor detects motion, it will change the lights to their full brightness (100%).

3 Lights will stay on at their full brightness for a previously set hold time (5sec/1min/5min/10min).

4 When motion is no longer detected and the hold time has elapsed, the sensor will dim the lights to the previously set brightness (10% or 30).

5 The sensor will turn the lights off after a pre-programmed hold time.

IP65 IK10

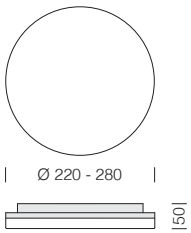



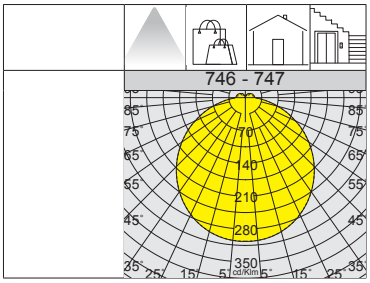



L90 B10 50.000h

RG0

3000K

4000K

746 Oblò 2.0 - Ø220						
		CLD				LUMEN OUTPUT (tq= 25 °C)
LED	colour	weight	Ø mm	code	W tot	K - ølm - CRI
LED	white	1.00	220	112626-00	**15**	4000K - 1444lm - CRI 83
				112626-39		3000K - 1328lm - CRI 83

747 Oblò 2.0 - Ø280							
		CLD			CLD radar sensor (stepDIM)		LUMEN OUTPUT (tq= 25 °C)
LED	colour	weight	Ø mm	code	code	W tot	K - ølm - CRI
LED	white	1.00	280	112636-00	112636-19	**18**	4000K - 1930lm - CRI 83
				112636-39	112636-1928		3000K - 1774lm - CRI 83

IP65 IK10

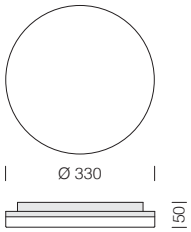



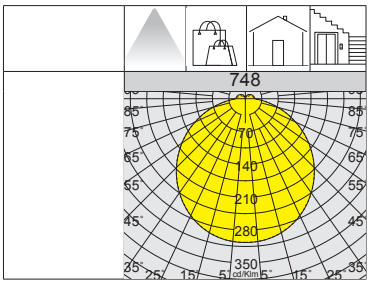



L90 B10 50.000h

RG0

3000K

4000K

748 Oblò 2.0 - Ø330							
		CLD			CLD radar sensor (stepDIM)		LUMEN OUTPUT (tq= 25 °C)
LED	colour	weight	Ø mm	code	code	W tot	K - ølm - CRI
LED	white	1.10	330	112646-00	112646-19	**24**	4000K - 2780lm - CRI 83
				112646-39	112646-1928		3000K - 2555lm - CRI 83



GENERAL CHARACTERISTICS

Oblò J 2.0 is easy-to-install wall/ceiling light fixture featuring an extremely resistant self-extinguishing polycarbonate housing (IK07) with a greater degree of protection (IP65) and double insulation. It comprises **high-efficiency** LED sources that ensure notable **energy savings**. Its minimalist and compact design makes it suitable for any outdoor application, especially balconies, porches, and terraces, as well as for indoor use, such as condominium staircases, landings, and common areas.

L90
B10
50.000h

RG0

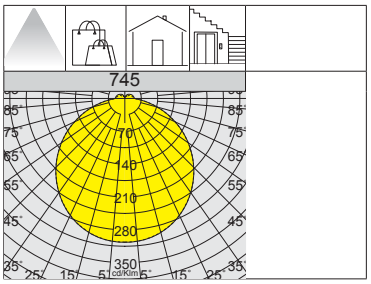

Equipment: supplied with bracket for ceiling/wall installation.



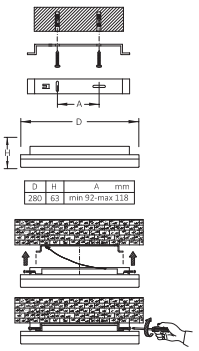



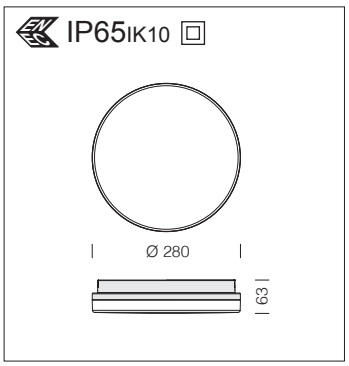

Housing: vandal-resistant, self-extinguishing polycarbonate.

Diffuser: In clear polycarbonate, anti-dazzle, vandal resistant.

LED: power factor >0.9.
Luminous flux maintenance 90%: 50.000h (L90B10).
Photobiological safety class: exempt group.

MANY VERSIONS FOR FURTHER ENERGY SAVINGS ARE AVAILABLE

Other options include versions with DIP-SWITCH DIP-SWITCH (ON-OFF only) and SMART lamps with Wi-Fi or CASAMBI control.

DIP SWITCH

Wi-Fi

CASAMBI



This ceiling fixture has colour temperatures of 3000K and 4000K and a high colour rendering index (CRI>80), guaranteeing effective, pleasant, and safe lighting.

The versatility of this ceiling lamp is given by the wide range of versions available, such as the **DALI** dimmable (CLD D-D), **centralised emergency** (CLD EC), **1/3h emergency** (CLD E) or **3h emergency + sensor** (CLD E) versions.

It is more energy efficient thanks to the **presence sensor** that turns the lamp on only when light is needed, increasing the already substantial energy savings.

ON OFF

745 Oblò J 2.0 - ON OFF

		CLD				LUMEN OUTPUT (tq= 25 °C)
LED	colour	weight	Ø mm	code	W tot	K - ølm - CRI
LED	white	1.00	280	112600-00	**16**	4000K - 2026lm - CRI>80
				112600-39		3000K - 1863lm - CRI>80
LED	white	1.00	280	112601-00	**21**	4000K - 2898lm – CRI>80
				112601-39		3000K - 2695lm – CRI>80

DIMM DALI-2

745 Oblò J 2.0 - DALI 2

		CLD D-D (DALI)				LUMEN OUTPUT (tq= 25 °C)
LED	colour	weight	Ø mm	code	W tot	K - ølm - CRI
LED	white	1.00	280	112600-0041	**16**	4000K - 2026lm - CRI>80
				112600-3941		3000K - 1863lm - CRI>80
LED	white	1.00	280	112601-0041	**21**	4000K - 2898lm – CRI>80
				112601-3941		3000K - 2695lm – CRI>80

-0050 EM-EC

745 Oblò J 2.0 - EM EC

		CLD EC				LUMEN OUTPUT (tq= 25 °C)
LED	colore	weight	Ø mm	code	W tot	K - ølm - CRI
LED	white	1.00	280	112600-0050	**16**	4000K - 2026lm - CRI>80
				112600-3950		3000K - 1863lm - CRI>80
LED	white	1.00	280	112601-0050	**21**	4000K - 2898lm – CRI>80
				112601-3950		3000K - 2695lm – CRI>80

EM 1h S.A.

745 Oblò J 2.0 - EM 1h

		CLD E (1h)				LUMEN OUTPUT (tq= 25 °C)	% EM operation	
LED	colour	weight	Ø mm	code	W tot	K - ølm - CRI	h	%
LED	white	1.50	280	112600-07	**19**	4000K - 2026lm - CRI>80	**1h**	5%
				112600-0728		3000K - 1863lm - CRI>80	**1h**	5%
LED	white	1.50	280	112601-07	**24**	4000K - 2898lm – CRI>80	**1h**	4%
				112601-0728		3000K - 2695lm – CRI>80	**1h**	4%

EM 3h S.A.

745 Oblò J 2.0 - EM 3h

		CLD E (3h)				LUMEN OUTPUT (tq= 25 °C)	% EM operation	
LED	colour	weight	Ø mm	code	W tot	K - ølm - CRI	h	%
LED	white	1.50	280	112600-31	**19**	4000K - 2026lm - CRI>80	**3h**	5%
				112600-3128		3000K - 1863lm - CRI>80	**3h**	5%
LED	white	1.50	280	112601-31	**24**	4000K - 2898lm – CRI>80	**3h**	3%
				112601-3128		3000K - 2695lm – CRI>80	**3h**	3%

EM 3h

745 Oblò J 2.0 - EM 3h + SENSOR

		CLD E (3h) + sensor (ON-OFF)				LUMEN OUTPUT (tq= 25 °C)	% EM operation	
LED	colour	weight	Ø mm	code	W tot	K - ølm - CRI	h	%
LED	white	1.50	280	112600-1957	**19**	4000K - 2026lm - CRI>80	**3h**	5%
				112600-19573000		3000K - 1863lm - CRI>80	**3h**	5%

The remote control (code **81412785**) is to be purchased separately at an additional cost; it allows modification of the fixture parameters after installation.

Built-in RADAR SENSOR (sub-code -19): an electronic device that immediately detects any presence entering its range. When the sensor reads motion inside its range, lights will stay on. When it no longer senses motion and based on the lighting level in its range, the sensor will turn off the lights after a pre-programmed time.

745 Oblò J 2.0 - SENSOR

		CLD sensor (ON-OFF)				LUMEN OUTPUT (tq= 25 °C)
LED	colour	weight	Ø mm	code	W tot	K - ølm - CRI
LED	white	0.90	280	112600-19	**16**	4000K - 2026lm - CRI>80
				112600-1928		3000K - 1863lm - CRI>80
LED	white	0.90	280	112601-19	**21**	4000K - 2898lm – CRI>80
				112601-1928		3000K - 2695lm – CRI>80

The remote control (code **81418618**) is to be purchased separately at an additional cost; it allows modification of the fixture parameters after installation.

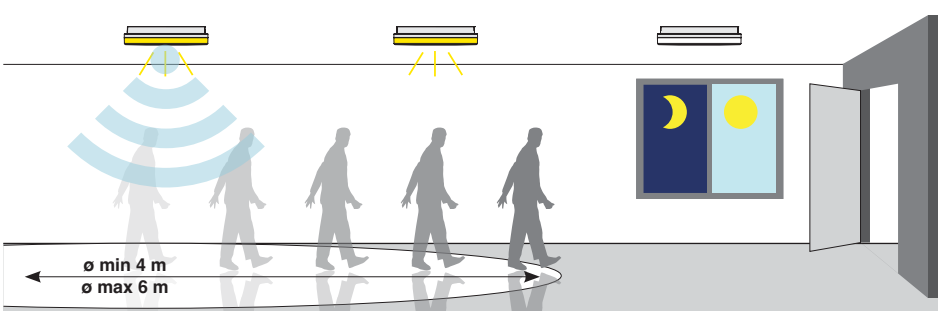

SENSOR - TECHNICAL SPECIFICATIONS	
Detection area	75%
Detection distance	Ø 4-6 m (adjustable)
Hold time	1 min
Ambient light	Disable
Power consumption	~ 0,9 W
Microwave frequency/power	5.8GHz / <0.3mW
Operating temperature	-25°C ÷ 60°C



GENERAL CHARACTERISTICS

Compact 2.0 stands out for its simple design and high-quality lighting output delivered by latest generation LED sources. Studied to deliver direct lighting, it is equipped with a highly efficient reflector to enhance the light beam.

Housing: in aluminium.

Reflector: optics in high gloss, anti-glare aluminium to optimise light efficiency.

Lens: supplied with anti-glare shielding cover.

LED: power factor >0.9.
Luminous flux maintenance 90%: 50.000h (L90B10).

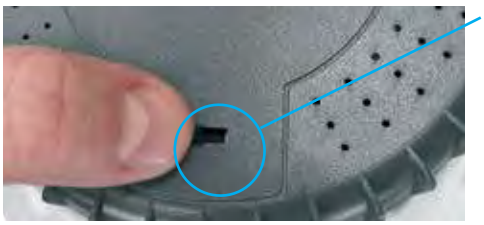

The main feature of this luminaire is the "colour-changing" technology: with the built-in selector switch positioned on the fixture's body, you can choose the desired colour temperature (3000K-4000K-5700K), adjusting its emission to most lighting installations.

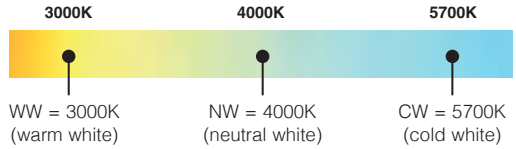

L90 B10 50.000h

RG0

U.V.

DIMM DIG

CCT SWITCH

LOW FLICKER

UGR <19

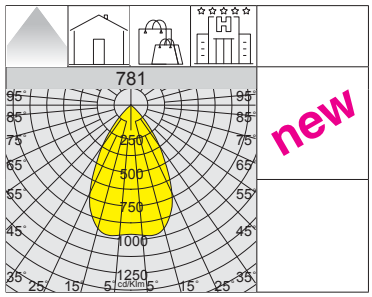



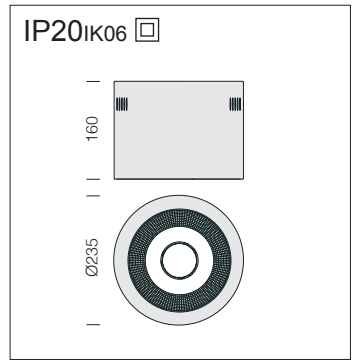

781 Compact 2.0 - CCT / DIP SWITCH

		CLD				LUMEN OUTPUT (tq= 25 °C)
LED	colour	weight	code	I out	W tot	K - ølm - CRI - degrees
SMD	white	0.60	156304-00	***700***	**28**	3000K - **2717lm** - CRI>80 - 62°
						4000K - **2860lm** - CRI>80 - 62°
						5700K - **2789lm** - CRI>80 - 62°

781 Compact 2.0 - DALI

		CLD D-D (DALI)			LUMEN OUTPUT (tq= 25 °C)
LED	colour	weight	code	W tot	K - ølm - CRI - degrees
SMD	bianco	0.60	156304-0041	**28**	3000K - **2717lm** - CRI>80 - 62°
					4000K - **2860lm** - CRI>80 - 62°
					5700K - **2789lm** - CRI>80 - 62°

DALI version with the driver set to the maximum power of the DIP SWITCH version.

DIP SWITCH SETTING		LUMEN OUTPUT (tq= 25 °C)
I out	W tot	K - ølm - CRI - degrees
500	19	3000K - 1960lm - CRI>80 - 62°
600	24	3000K - 2337lm - CRI>80 - 62°
650	26	3000K - 2527lm - CRI>80 - 62°
700	***28***	*3000K - 2717lm - CRI>80 - 62°*

DIP SWITCH SETTING		LUMEN OUTPUT (tq= 25 °C)
I out	W tot	K - ølm - CRI - degrees
500	19	4000K - 2063lm - CRI>80 - 62°
600	24	4000K - 2460lm - CRI>80 - 62°
650	26	4000K - 2660lm - CRI>80 - 62°
700	***28***	*4000K - 2860lm - CRI>80 - 62°*

DIP SWITCH SETTING		LUMEN OUTPUT (tq= 25 °C)
I out	W tot	K - ølm - CRI - degrees
500	19	5700K - 2011lm - CRI>80 - 62°
600	24	5700K - 2378lm - CRI>80 - 62°
650	26	5700K - 2567lm - CRI>80 - 62°
700	***28***	5700K - *2789lm* - CRI>80 - 62°

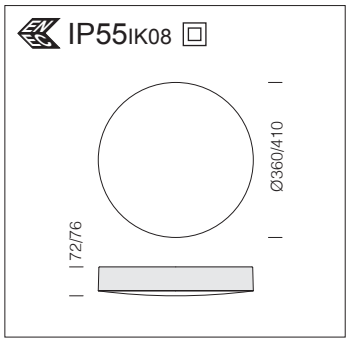



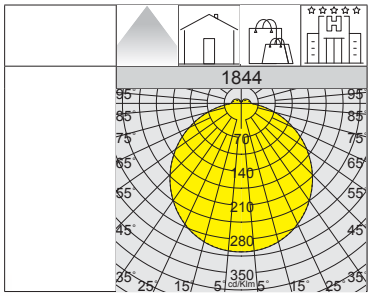

L80 B20 60.000h

L90 B10 50.000h

RGO

U.V.

EM S.A.

CCT POWER

GENERAL CHARACTERISTICS

Housing/ Diffuser: UV-stabilised anti-yellowing polypropylene.

LED: power factor: ≥0,9.
Luminous flux maintenance 80%: 60.000h (L80B20).
Luminous flux maintenance 90%: 50.000h (L90B10).

Upon request for black colour version:
• emergency wiring **CLD E** with **sub-code -07 (3h).**
• built-in radar sensor **(subcode -19)**.

1844 Globo 2.0 - Ø360 - CCT/POWER SWITCH

		CLD			*CLD E (3h)	CLD radar sensor		LUMEN OUTPUT (tq= 25 °C)
LED	colour	weight	Ø mm	code	code	code	W tot	K - ølm - CRI
LED	white	0.90	360	427250-00	427250-07	427250-19	**13**	3000K - 1495lm - CRI>80
								4000K - 1625lm - CRI>80
								5700K - 1560lm - CRI>80
							18	3000K - 1980lm - CRI>80
								4000K - 2160lm - CRI>80
								5700K - 2070lm - CRI>80
LED	black	0.90	360	427250-2121			**13**	3000K - 1495lm - CRI>80
								4000K - 1625lm - CRI>80
								5700K - 1560lm - CRI>80
							18	3000K - 1980lm - CRI>80
								4000K - 2160lm - CRI>80
								5700K - 2070lm - CRI>80

1844 Globo 2.0 - Ø410 - CCT/POWER SWITCH

		CLD			*CLD E (3h)	CLD radar sensor		LUMEN OUTPUT (tq= 25 °C)
LED	colour	peso	Ø mm	code	code	code	W tot	K - ølm - CRI
LED	white	0.90	410	427251-00	427251-07	427251-19	**22**	3000K - 2420lm - CRI>80
								4000K - 2640lm - CRI>80
								5700K - 2530lm - CRI>80
							32	3000K - 3520lm - CRI>80
								4000K - 3680lm - CRI>80
								5700K - 3520lm - CRI>80
LED	black	0.90	410	427251-2121			**22**	3000K - 2420lm - CRI>80
								4000K - 2640lm - CRI>80
								5700K - 2530lm - CRI>80
							32	3000K - 3520lm - CRI>80
								4000K - 3680lm - CRI>80
								5700K - 3520lm - CRI>80

***CLD E:** emergency wiring with **sub-code -07**.*

GLOBO 2.0 - CCT / POWER SWITCH : in a single body frame, you have a fully equipped luminaire designed to meet any need, including the possibility to select the desired colour temperature (3000K-4000K-5700K) in 2 power wattages, maintaining aesthetic continuity and differentiating the amount of light emitted.

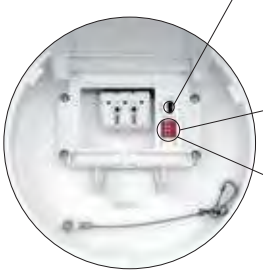

CCT SWITCH = with this integrated switch you can select the desired light colour, 3000K - 4000K - 5700K.

The main feature of this luminaire is the "colour-changing" technology: with the built-in selector switch positioned on the fixture's body, you can choose the desired colour temperature (3000K-4000K-5700K), adjusting its emission to most lighting installations.

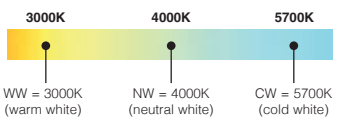

POWER SWITCH = with this integrated switch you can select the fixture's total wattage, 13W/18W - 22W/32W.

Version with Built-in RADAR SENSOR (sub-code -19): is an automatic sensor that immediately sense the presence of people's movements and anyone walking past. When there is movement within the sensor's detection range, the light will remain ON. When no further movement is detected, the light will switch OFF after a pre-set time.

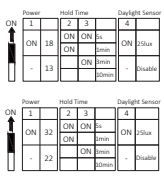

Typical detection area for version with sensor at 3m height.

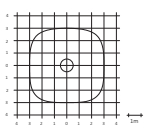

ACCESSORIES AND INSTALLATION

acc. 2516 suspension	
white	994041-00
Complete suspension kit including an installation base, ceiling mounting bracket, and power cable.	

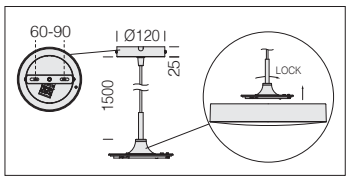

- secure the metal mounting bracket to the ceiling;
- connect the power cable to the terminal inside the base plate, then attach the base plate to the mounting bracket. Next, connect the suspension cable to the terminal on the luminaire;
- rotate the luminaire clockwise until it locks securely onto the suspension base, then tighten the anti-fall screws.

L90 B10 50.000h

RG0

U.V.

CCT POWER

new



GLOBO - CCT / POWER SWITCH: in a single body frame, you have a fully equipped luminaire designed to meet any need, including the possibility to select the desired colour temperature (3000K-4000K-5700K) in 2 power wattages, maintaining aesthetic continuity and differentiating the amount of light emitted.



IP65 IK10

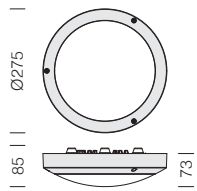

IP65 IK08

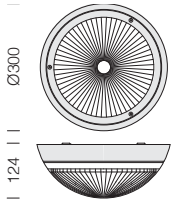

1884 Globo - CCT/POWER SWITCH / VANDAL-RESISTANT

		CLD			LUMEN USCENTI (tq= 25 °C)
LED	colour	weight	code	W tot	K - ølm - CRI
LED	white	1.30	427244-00	10	3000K - **1210lm** - CRI>80
					4000K - **1265lm** - CRI>80
					5700K - **1265lm** - CRI>80
				20	3000K - **2290lm** - CRI>80
					4000K - **2400lm** - CRI>80
					5700K - **2400lm** - CRI>80

GENERAL CHARACTERISTICS

Housing: in aluminium with vandal resistant, self-extinguishing, UV-stabilised anti-yellowing polycarbonate diffuser.
LED: power factor ≥0,9.
Luminous flux maintenance 90%: 50.000h (L90B10).

As standard, designed to fit LED lamp with E27 connector.



1544 Globo

		CLD S	
LED	colour	weight	code
LED (LAMP E27)	grey	0.80	427246-00

Housing: vandal resistant, self-extinguishing, UV-stabilised; with vandal resistant, V2 self-extinguishing, UV-stabilised clear polycarbonate, dust-proof outside diffuser.

L90 B10 50.000h

RG0

U.V.

EM S.A.

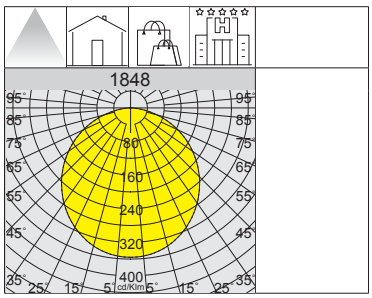



IP65



IP65 IK06

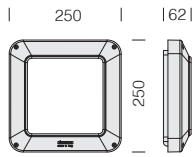

GENERAL CHARACTERISTICS

Housing: In die-cast aluminium.

Diffuser: in opal methacrylate anti-glare polycarbonate; dustproof.

LED: power factor: ≥0,92.
Luminous flux maintenance 90%: 50.000h (L90B10).

Protective coating recommended for marine environments within 5 km of the sea.

1848 Riquadro - LUXURY

		CLD		CLD E		LUMEN OUTPUT (tq= 25 °C)
LED	colour	weight	code	code	W tot	K - ølm - CRI
LED	s. silver	1.40	427552-00	427552-09	9	4000K - 1032lm - CRI 80

IP65IK08

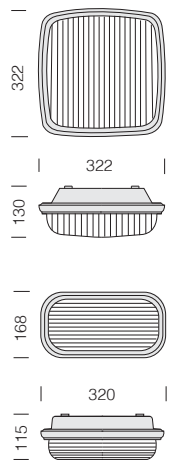



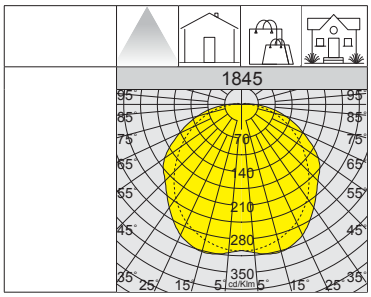

L90 B10 50.000h

RG0

U.V.

EM S.A.

GENERAL CHARACTERISTICS

Housing: vandal resistant, self-extinguishing, UV-stabilised anti-yellowing polycarbonate.

Diffuser: vandal resistant, V2 self-extinguishing, UV-stabilised anti-glare polycarbonate (dust-proof outside for Cubo).

LED: power factor: ≥0,85.
Luminous flux maintenance 90%: 50.000h (L90B10).

1845 Cubo

		CLD		CLD E		LUMEN OUTPUT (tq= 25 °C)
LED	colour	weight	code	code	W tot	K - ølm - CRI
LED	grigio	1.60	427445-00	427445-07	**7**	4000K - 931lm - CRI>80

1847 Orma

		CLD		CLD E		LUMEN OUTPUT (tq= 25 °C)
LED	colour	weight	code	code	W tot	K - ølm - CRI
LED	grey	1.00	427542-00	427542-07	**9**	4000K - 954lm - CRI>80

IP43IK08

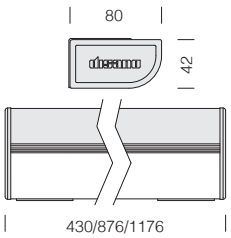

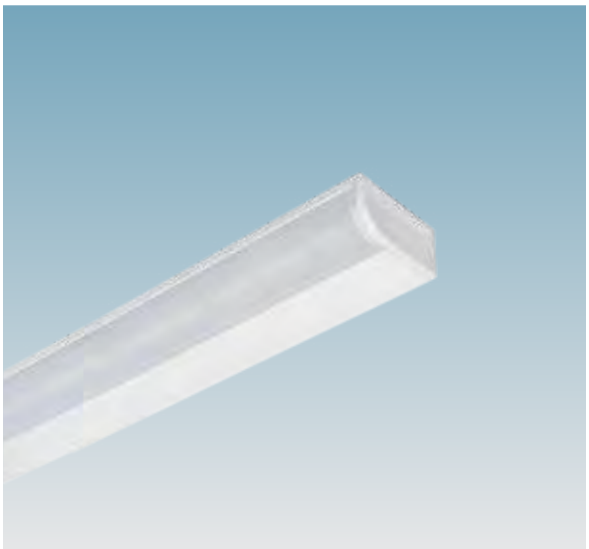

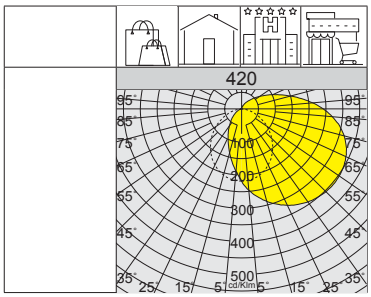

Supplied with brackets for wall or ceiling mounting.

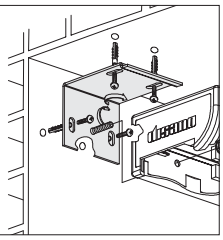

L90 B10 50.000h

RG0

U.V.

GENERAL CHARACTERISTICS

Housing: in extruded aluminium with ABS end caps.

Diffuser: in opal polycarbonate, fluted inside, smooth on the outside, dust-proof, UV stabilized.

LED: power factor: ≥0,9.
Luminous flux maintenance 90%: 50.000h (L90B10).

420 Rigo

			CLD			LUMEN OUTPUT (tq= 25 °C)
LED	colour	L	weight	code	W tot	K - ølm - CRI
LED	white	430 mm	0.80	214565-00	**8**	4000K - 833lm - CRI>80
		876 mm	1.20	214566-00	**18**	4000K - 1906lm - CRI>80
		1176 mm	1.50	214567-00	**28**	4000K - 2858lm - CRI>80



Emergency lighting is an essential safety system to ensure the protection of people during emergency situations. People who are left in the dark during power outages or block-outs, especially in crowded places or during a catastrophic event, will feel uneasy, hence increasing the risk of getting hurt because uneasiness can easily turn into panic. Therefore, an efficient emergency lighting system is an essential requirement to guarantee a safe and fast evacuation during emergencies. If this system is designed in compliance with existing laws and regulations, it will provide the necessary aid that, together with adequate safety signals, will ensure a smooth evacuation from the premises.

GENERAL CHARACTERISTICS

Housing: ABS, white colour.

Diffuser: polycarbonate, vandal resistant, V2 self-extinguishing, UV-stabilise, anti-glare frosted inside.

EM S.E.

EM S.A.

CCT POWER

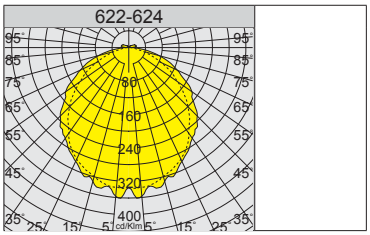

S.E. Emergency (Only emergency): in the event of a black-out the one lamp connected to the back-up circuit ignites, thus avoiding the inconvenience caused by a sudden absence of all light. Emergency run time: 60 minutes. When power is restored, the battery recharges automatically.

S.A. Emergency (Maintained): in the event of a black-out the one lamp connected to the back-up circuit stays on, thus avoiding the inconvenience caused by a sudden absence of all light. Emergency run time: 60 minutes. When power is restored, the battery recharges automatically.



IP65 IK08

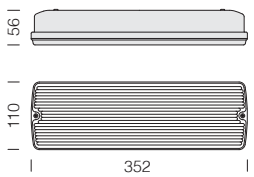

Upon request: fixtures with **sub-code -95** with an emergency system featuring the standard DALI protocol (inverter only), compatible with all advanced centralised control systems.

NOTE: *the -95 equipped product will remain ON-OFF and not DALI dimmable (order with subcode -9541).*

624 Safety 2.0 - DALI - S.E. Emergency Only

		CLD ED			CCT SWITCH	LUMEN OUTPUT S.E. (tq= 25 °C)	
LED	colour	weight	code	autonomy	Kelvin	W tot S.E.	ølm - CRI
LED	white	1.00	112534-95001025	**1h**	4000K/**5700K**	**1**	750lm - CRI 80

622 Safety 2.0 - DALI - S.A. Maintained

		CLD ED			CCT SWITCH	LUMEN OUTPUT S.A. (tq= 25 °C)		
LED	colour	weight	code	autonomy	Kelvin	W tot S.A.	ølm - CRI	% EM operation
LED	white	1.00	112544-95001026	**1h**	4000K/**5700K**	**7**	850lm - CRI 80	88%

ACCESSORIES OF INSTALLATION SAFETY 2.0

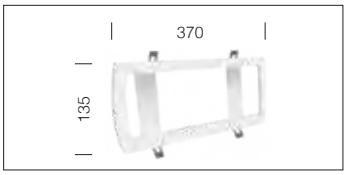

acc. 315 outer shell for Safety 2.0

white	995212-00

Made in polycarbonate. For recessed installation of Safety 2.0.

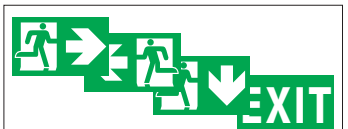

visible up to 22 m. UNI EN1838

acc. 472 labels for Safety 2.0

right out	995137-00
left out	995138-00
down out	995139-00
exit	995144-00

EM self-adhesive pictograms.

IP65IK08

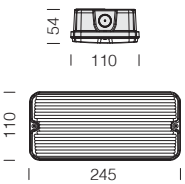

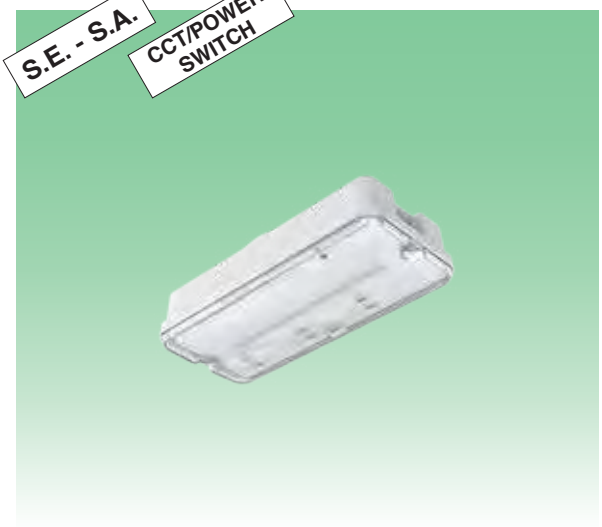

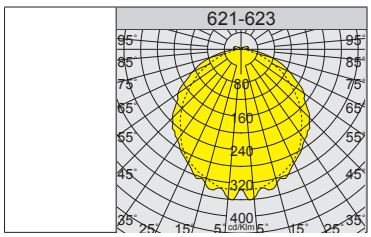

S.E. Emergency (Only emergency): in the event of a black-out the one lamp connected to the back-up circuit ignites, thus avoiding the inconvenience caused by a sudden absence of all light. Emergency run time: 60/180 minutes. When power is restored, the battery recharges automatically.

S.A. Emergency (Maintained): in the event of a black-out the one lamp connected to the back-up circuit stays on, thus avoiding the inconvenience caused by a sudden absence of all light. Emergency run time: 60/180 minutes. When power is restored, the battery recharges automatically.

621 Safety 3.0 - S.E. Emergency Only - S.A. Maintained

		CLD CEM-L			CCT SWITCH	LUMEN OUTPUT S.E. (tq= 25 °C)		LUMEN OUTPUT S.A. (tq= 25 °C)	
LED	colour	weight	code	autonomy	Kelvin	W tot S.E.	ølm - CRI	W tot S.A.	ølm - CRI
LED	white	0.30	112533-00	**1h**	4000K/**5700K**	**1**	70lm/110lm/150lm - CRI 80	2/3/**4**	70lm/110lm/150lm - CRI 80
			112534-00		4000K/**5700K**		200lm/300lm - CRI 80	5/**7**	200lm/300lm - CRI 80
			112536-00		4000K/**5700K**		400lm - CRI 80	**7**	400lm - CRI 80

623 Safety 3.0 AUTOTEST - S.E. Emergency Only - S.A. Maintained

		CLD CEM-L			CCT SWITCH	LUMEN OUTPUT S.E. (tq= 25 °C)		LUMEN OUTPUT S.A. (tq= 25 °C)	
LED	colour	weight	code	autonomy	Kelvin	W tot S.E.	ølm - CRI	W tot S.A.	ølm - CRI
LED	white	0.30	112563-00	**3h**	4000K/**5700K**	**1**	70lm/110lm/150lm - CRI 80	2/3/**4**	70lm/110lm/150lm - CRI 80
			112564-00		4000K/**5700K**		200lm/300lm - CRI 80	5/**7**	200lm/300lm - CRI 80
			112566-00		4000K/**5700K**		400lm - CRI 80	**7**	400lm - CRI 80

The main feature of this fixture is the new colour-changing technology. With **two built-in switches** you can:



- select 2 different colour temperatures, adjusting to most installations:

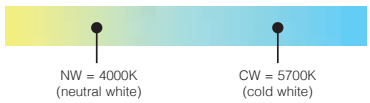

- select the type of **output luminous flux and power**.

standard configuration is *5700K* and *maximum power/flux values*

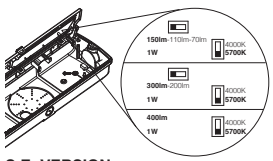

S.E. VERSION

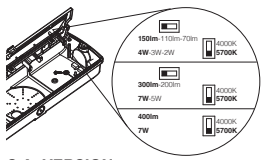

S.A. VERSION

- **can be configured for either Emergency Only (S.E.) mode or Maintained (S.A.) mode** by directly wiring the electrical connections to the provided terminal block:

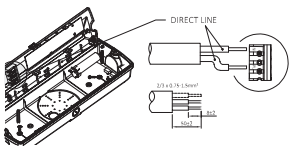

S.E. VERSION

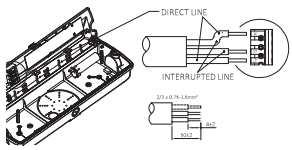

S.A. VERSION

Safety 3.0 provides real-time information on the status of the luminaire, performing all the tests indicated in the UNI-EN-50172 standard. A simple way to reduce costs and make system inspection and maintenance easier. Anyone can supervise the emergency lighting system.

Safety 3.0 with AUTOTEST	
OPERATION	**DESCRIPTION**
After 1st installation (power keep on during 24hrs).	At the beginning of the test a red LED indicator will flash slowly for 15 seconds, then the unit will switch to emergency mode for 3hrs and switch back to normal operation.
Functional test - 5 min (every 30 days).	Green LED indicator will flash slowly (1sec on / 1sec off).
Full duration test - 3 hrs (every 180 days).	At the beginning of the test a red LED indicator will flash slowly for 15 seconds, then the unit will switch to emergency mode for 3 hrs and switch back to normal operation. If full charge, green LED indicator will flash slowly (1sec on / 1sec off).
Emergency Mode: when voltage drop to 152-165V, the unit switch to emergency mode automatically.	LED indicator si off.

ACCESSORIES OF INSTALLATION SAFETY 3.0

acc. 472 labels for Safety 3.0	
right out	995147-00
left out	995148-00
down out	995149-00
exit	995153-00
EM self-adhesive pictograms.	

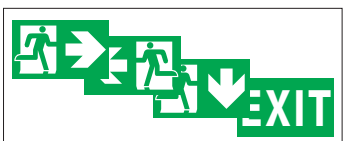

visible up to 22 m. UNI EN1838

acc. 394 outer shell for Safety 3.0	
white	995213-00
Made in polycarbonate. For recessed installation of Safety 3.0.	





Emergency lighting is an essential safety system to ensure the protection of people during emergency situations. People who are left in the dark during power outages or block-outs, especially in crowded places or during a catastrophic event, will feel uneasy, hence increasing the risk of getting hurt because uneasiness can easily turn into panic. Therefore, an efficient emergency lighting system is an essential requirement to guarantee a safe and fast evacuation during emergencies. If this system is designed in compliance with existing laws and regulations, it will provide the necessary aid that, together with adequate safety signals, will ensure a smooth evacuation from the premises.

GENERAL CHARACTERISTICS

Housing: polycarbonate, shatterproof, V2 self-extinguishing, UV stabilised.

Standard versions: self-test button providing real-time status information; autonomy ≥ 3 h with recharging in ≤ 24 h.

EM S.E.

EM TEST

RG0

new

The luminaire comes with easily interchangeable optic, specifically designed for:
- anti-panic lighting in large areas: standard round lens.
- corridor/escape route lighting: optional oval lens.

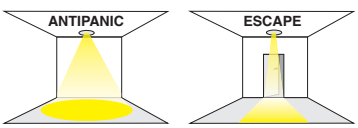

S.E. Emergency (Emergency only): in the event of a black-out the one lamp connected to the back-up circuit ignites, thus avoiding the inconvenience caused by a sudden absence of all light. Emergency run time: 180 minutes. When power is restored, the battery recharges automatically.

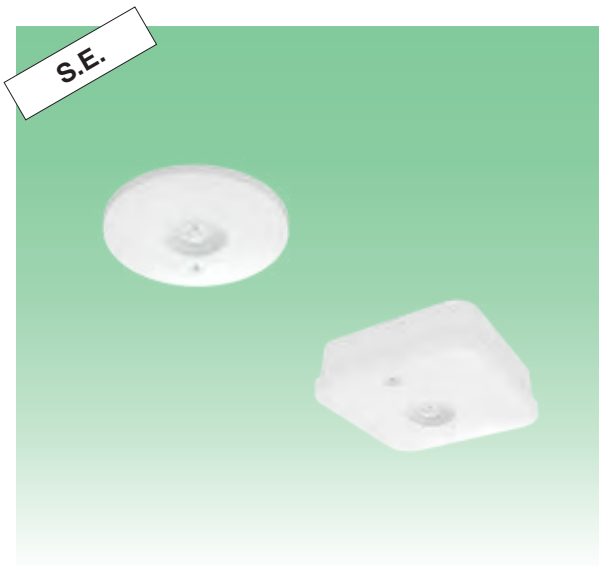

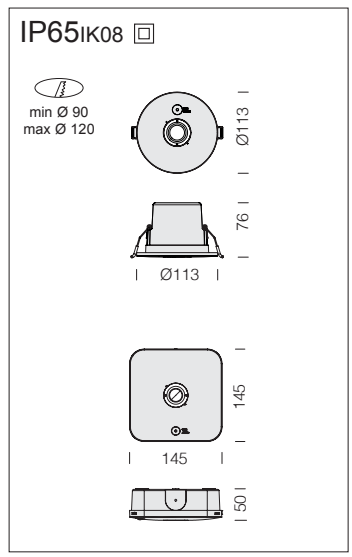

Upon request: fixtures with **subcode -95** are available with an emergency system featuring the standard DALI protocol (inverter only), compatible with all advanced centralised control systems.

NOTE: *the -95 equipped product will remain ON-OFF and not DALI dimmable (order with subcode -9541).*

629 Safety Round S.E. Emergency Only - recessed						
		CLD CEM-L				LUMEN OUTPUT (tq= 25 °C)
LED	colour	weight	code	autonomy	W tot	K - ølm - CRI
LED	white	0.20	112500-00	**3h**	**3**	6500K - **320lm** - CRI 80
EM power: 2,2W max.						

628 Safety Square S.E. Emergency Only - ceiling						
		CLD CEM-L				LUMEN OUTPUT (tq= 25 °C)
LED	colour	weight	code	autonomy	W tot	K - ølm - CRI
LED	white	0.30	112509-00	**3h**	**3**	6500K - **320lm** - CRI 80
EM power: 2,2W max.						

IP20IK08

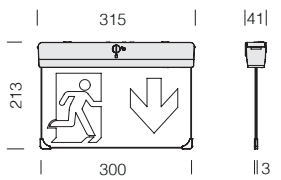



new



EM S.A.

-95 ED

EM TEST

RGO

Upon request: fixtures with **sub-code -95** are available with an emergency system featuring the standard DALI protocol (inverter only), compatible with all advanced centralised control systems.

NOTE: *the -95 equipped product will remain ON-OFF and not DALI dimmable (order with subcode -9541).*

S.A. Emergency (Maintained): in the event of a black-out the one lamp connected to the back-up circuit stays on, thus avoiding the inconvenience caused by a sudden absence of all light. Emergency run time: 180 minutes. When power is restored, the battery recharges automatically.

630 Safety Flag S.A. Maintained

		CLD CEM-L				LUMEN OUTPUT (tq= 25 °C)
LED	colour	weight	code	autonomy	W tot	K - ølm - CRI
LED	white	0.50	112521-00	**3h**	**3**	6500K - **320lm** - CRI 80
EM power: 1W max. DALI 2 version available on request.						

ACCESSORIES AND EXAMPLE OF INSTALLATION

Safety Flag is suitable for flag-type, recessed, and pendant installation using the supplied accessories. Installation is simple, quick, and safe, while the different configurations provide maximum versatility, adapting to all application needs.



acc. 485 flag-type bracket

995440-00

To be used for flag installation of Safety Flag.



acc. 486 recessed frame

995441-00

To be used for recessed installation of Safety Flag.



acc. 487 suspension bracket

995442-00

To be used for suspension installation of Safety Flag.

EM Label designed to be quickly and easily detached from the fixture.

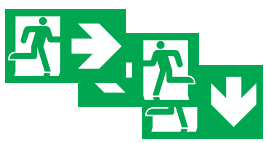

acc. 470 labels for art. 630

right out	995150-00
left out	995151-00
down out	995152-00
Pictograms available and visible up to 40 m. UNI EN1838. Bag containing 2 pieces	

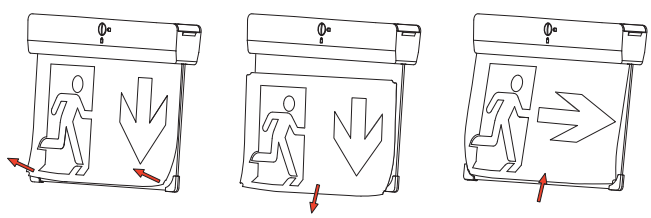

The **Safety** series provides real-time information on the status of the luminaire, performing all the tests indicated in the UNI-EN-50172 standard. A simple way to reduce costs and make system inspection and maintenance easier. Anyone can supervise the emergency lighting system.

Safety Round - Safety Square - Safety Flag with MANUALTEST button

OPERATION	TEST	ACTION	DESCRIPTION
Manual functional test	Press the test button	Simulates emergency duration of 3 seconds	Indicator flashes rapidly (0.5 s on / 0.5 s off)
Monthly test	Press the test button twice within 2 seconds	Simulates emergency duration of 60 seconds	Indicator flashes rapidly (0.5 s on / 0.5 s off)
Annual test	Press the test button 3 times within 2 seconds after a continuous 24-hour recharge	Simulates emergency duration of 3 hours	Indicator flashes rapidly (0.5 s on / 0.5 s off)
Reset	Press and hold the test button for more than 3 s (Safety Round/Square) or 10 s (Safety Flag)	Resets the self-test programme	Indicator flashes 3 times (0.5 s on / 0.5 s off)
Troubleshooting	Press and hold the test button for more than 5 s	Elimination of errors	Indicator flashes 3 times (0.5 s on / 0.5 s off)



OTTIMA



Ottima p. 88

THEMA - HYDRO

THEMA



HIGH PERFORMANCE
FS - ICE/HT



HIGH PERFORMANCE
DRIVER AC/DC



HYDRO STYLE



Thema p. 90

Hydro p. 92
high performance p. 94
FS p. 95
ICE/HT p. 95
high performance driver AC/DC p. 96
STYLE p. 98

ECHO

ENERGY SAVING
3000K - 6500K



PARKING
HIGH PERFORMANCE



HIGH EFFICIENCY - FS
RADAR SENSOR



DESIGNED TO FIT
LED TUBES



Echo p. 100

energy saving p. 102
3000K/6500K p. 103
parking p. 104
high performance p. 105
high efficiency p. 106
FS p. 107
radar sensor p. 108
for LED tubes p. 110

MALTA



DORNO



Malta p. 111
Dorno p. 112

FORMA - STEEL

HT







HE



Forma p. 114

ATEX

INTRO

ATEX

ECHO



FORMA



ASTRO Q MINI



Atex p. 118

Echo p. 119
Forma p. 120
Astro Q Mini p. 121

RADON
HORTICULTURE



Radon see chapter Horticolture

GENERAL CHARACTERISTICS

Housing: injection moulded, in grey polycarbonate, shatter-proof, UV-stabilised, highly resistant to mechanical impacts thanks to the reinforced structure with internal ribbing.

Diffuser: transparent polycarbonate injection-moulded diffuser with grooves and internal opaque satin finish for greater lighting diffusion, V2 self-extinguished, UV stabilised, outer smooth finish for easy cleaning and to maximize lighting efficiency. Closure with clamps and stainless steel safety screws.

Reflector: in galvanised steel, previously stone-enamelled with UV-stabilised polyester resin. Clamping device manufactured directly onto the housing.

Standard supply: eco-friendly and anti-aging expanded polyurethane injected gasket. The fixing brackets for ceiling and suspension mounting are in stainless steel.

For installations with direct exposure to sunlight, we recommend using Forma LED. Check the compatibility between the material constituting the product and the space where it will be installed

Luminous flux maintenance	
art. 971	**25-34-48W**
	L80B20 - 120.000h
	L90B10 - 100.000h

Photobiological safety class: exempt group.
Ambient temperature: -30°C to + 40°C (excluding emergency versions).

OTHER CHARACTERISTICS



Greater performance
The fixture is made with first-choice polycarbonate stabilised against UV light. It has been treated to eliminate glare without affecting performance. Polycarbonate with excellent diffusion coefficient and lighting transmission.

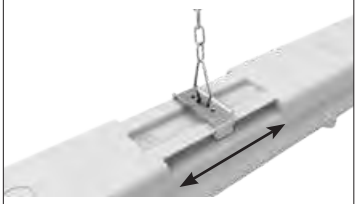

The stainless steel bracket supplied as standard allows easy and safe installation of the lighting fixture onto the ceiling/wall (with the possibility to adjust the mounting space). **The standard spring loop** allows quick connection to any chain suspension system.



Waterproof connector for quick installation.
The fixture is secured to the fixing brackets through quick connectors.

OTHER INFORMATION



Self-extinguishing
U.L.94 is a widely accepted USA flammability standard that classifies plastics according to how they burn. The **OTTIMA** fixture is made of **V2** self-extinguishing plastic material: burning stops within **25 seconds**.

Glow wire test
Glow wire tested at 850°C.

ALL LIGHT: no glare. The special surface finish of the diffuser allows light to escape, creating an "all light" effect. The fluted diffuser spreads light evenly without leaving dark areas.



-0050 EM-EC Version **CLD EC** wiring with **subcode -0050:** permanently mounted fixture, operating in AC/DC mode, with centralized emergency device, not incorporated into the fixture.

UPON REQUEST

Built-in RADAR SENSOR (sub-code -19): is an automatic sensor that immediately sense the presence of people's movements and anyone walking past (remote control cod. **81418618** to be purchased separately; it **allows modification of the fixture parameters after installation**)

Possibility of centralized lighting point control or via **external** presence/lighting sensors (see chapter *Lighting management systems and recommendations*).

-94 ED 1-10V With **1-10V dimmable electronic gear + emergency: subcode -94.**

ACCESSORIES AND INSTALLATION

acc. 978 wall bracket	
galvanized	998078-00
Made of galvanized steel. For installation of Ottima LED fixtures on walls. Bag containing 2 pieces.	



acc. 975 protection guard	
1600mm	165565-00
White plastic-coated steel rod. To be installed directly on the ceiling.	

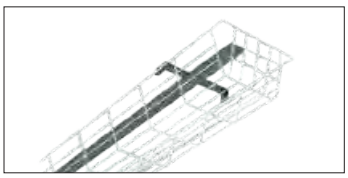

acc. 6036 universal conn.	
galvanised	132987-00
Made of galvanized steel. To install non-corrosive fixtures on track art. 6000. Bag containing 1 piece.	



Continuous row with special lighting fitting with cable
For the installation in continuous row, order the special body with subcode **-0072** with extra price.
Note: the last fixture of the row must be of the standard type.

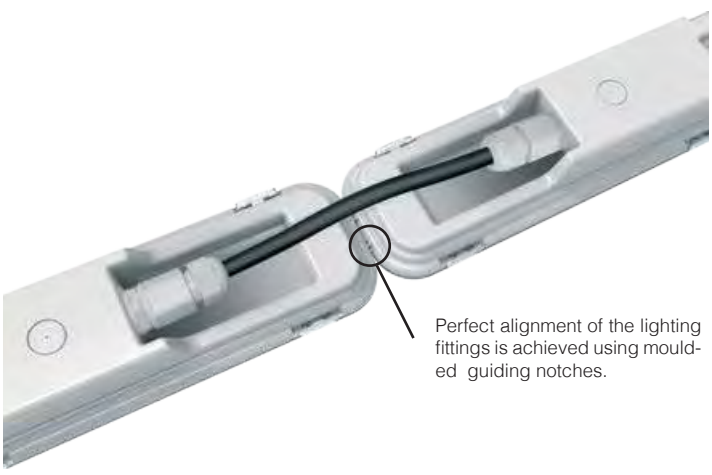

Perfect alignment of the lighting fittings is achieved using moulded guiding notches.



IP66 IK10

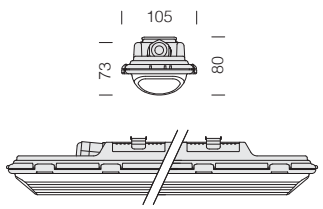

LED: power factor: ≥0,95. Luminous flux maintenance 90%: 100.000h (L90B10).



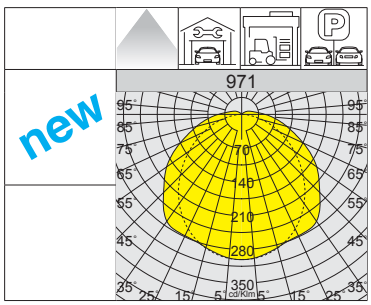

Upon request: available narrow beam version.

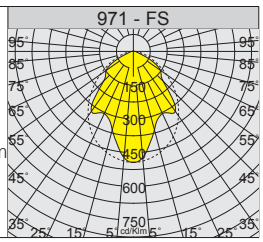

L90 B10 100.000h

RG0

+40 C° -30

DIMM DIG

EM S.A.

-0050 EM-EC

NO

LOW FLICKER

971 Ottima						
		CLD		CLD D-D (DALI)		LUMEN OUTPUT (tq= 25 °C)
LED	colour	weight	code	code	W tot	K - ølm - CRI
LED	grey	2.10	164770-00	164770-0041	**25**	4000K - **4970lm** - CRI>80
			164777-00	164777-0041	**34**	4000K - **6946lm** - CRI>80
			164772-00	164772-0041	**48**	4000K - **9746lm** - CRI>80
			164774-00	164774-0041	**57**	4000K - **11036lm** - CRI>80
			164778-00	164778-0041	**84**	4000K - **15000lm** - CRI>80

971 Ottima EM						
		CLD E		CLD EC		LUMEN OUTPUT (tq= 25 °C)
LED	colour	weight	code	code	W tot	K - ølm - CRI
LED	grey	2.10	164770-07	164770-0050	**25**	4000K - **4970lm** - CRI>80
			164777-07	164777-0050	**34**	4000K - **6946lm** - CRI>80
			164772-07	164772-0050	**48**	4000K - **9746lm** - CRI>80
			164774-07	164774-0050	**57**	4000K - **11036lm** - CRI>80
			164778-07	164778-0050	**84**	4000K - **15000lm** - CRI>80

Eemergency wiring with centralized power supply: **sub-code -0050** (the ceiling lamps are supplied with a single power outlet capable of managing both standard power mode and emergency-EM mode).

GENERAL CHARACTERISTICS

Housing: injection moulded, in grey polycarbonate, shatter-proof, UV-stabilised, highly resistant to mechanical impacts thanks to the reinforced structure with internal ribbing.

Diffuser: injected moulded in polycarbonate with internal ribbing for greater lighting control, in V2 self-extinguishing, UV-stabilised material; its smooth outer finish makes cleaning easier and increases lighting efficiency. Equipped with stainless steel screw clamping.

Reflector: in galvanised steel, previously stone-enamelled with UV-stabilised polyester resin. Clamping device manufactured directly onto the housing.

Standard supply: eco-friendly and anti-aging expanded polyurethane injected gasket. The fixing brackets for ceiling and suspension mounting are in stainless steel. Socket-plug connector. The fixture is secured to the fixing brackets through quick connectors.

For installations with direct exposure to sunlight, we recommend using Forma LED.

LED: power factor: ≥0,95.
Luminous flux maintenance 90%: 80.000h (L90B10).
Photobiological safety class: exempt group.
Allowable ambient temperature : -30°C to + 40°C (excluding emergency versions).

OTHER CHARACTERISTICS



Greater performance
The fixture is made with first-choice polycarbonate stabilised against UV light. It has been treated to eliminate glare without affecting performance. Polycarbonate with excellent diffusion coefficient and lighting transmission.

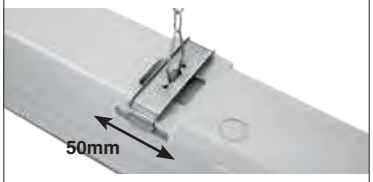

The stainless steel bracket supplied as standard allows easy and safe installation of the lighting fixture onto the ceiling/wall (with the possibility to adjust the mounting space).

The standard spring loop allows quick connection to any chain suspension system.



Stainless steel safety screw-type clamping. It can be opened to replace the batteries as needed. Injected gasket in anti-aging and eco-friendly material.

OTHER INFORMATION



Self-extinguishing
U.L.94 is a widely accepted USA flammability standard that classifies plastics according to how they burn. The **THEMA** fixture is made of **V2** self-extinguishing plastic material: burning stops within **25 seconds**.

Glow wire test
Glow wire tested at 850°C.

ALL LIGHT: no glare
The special surface finish of the diffuser allows light to escape, creating an "all light" effect. The fluted diffuser spreads light evenly without leaving dark areas.



UPON REQUEST

Built-in RADAR SENSOR (sub-code -19): is an automatic sensor that immediately sense the presence of people's movements and anyone walking past

Possibility of centralized lighting point control or via **external** presence/lighting sensors (see chapter *Lighting management systems and recommendations*).

-0050 EM-EC Version **CLD EC** wiring with **subcode -0050:** permanently mounted fixture, operating in AC/DC mode, with centralized emergency device, not incorporated into the fixture.

CONNECTION TO THE QUICK CONNECTOR

The ceiling fixture comes with a quick connector to connect the unit to the electrical box **easily** and **safely** in **just a few seconds** and **without opening the unit**.

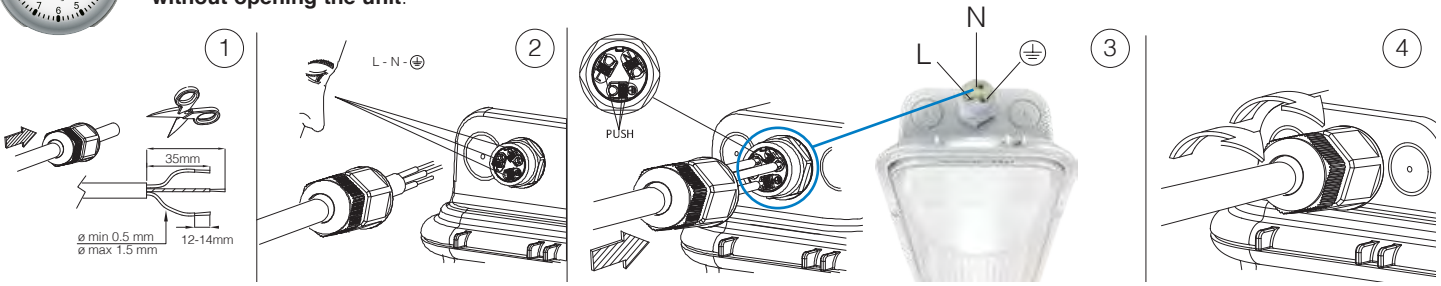

ACCESSORIES AND INSTALLATION

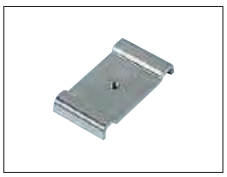

acc. 6036 universal conn.	
galvanised	132987-00
Made of galvanized steel. To install non-corrosive fixtures on track art. 6000. Bag containing 1 pieces.	



acc. 978 wall bracket	
galvanized	998078-00
Made of galvanized steel. For installation of Thema LED fixtures on walls. Bag containing 2 pieces.	

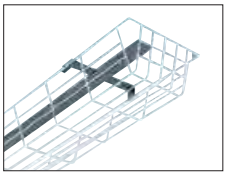

acc. 975 protection guard		
white	**1300mm**	165564-00
White plastic-coated steel rod. To be installed directly on the ceiling.		

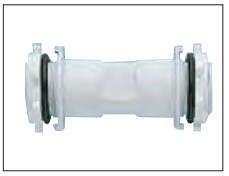

acc. 938 junction sleeve	
grey	998073-00
Polycarbonate, for jointing and transit of power supply cables (internal Ø 13 mm) between lighting fixtures (max distance 30 m). **2 per pack.**	

As standard, art. 970 Thema with subcode -0072 comes with **pass-through wiring and connectors** for installation **in continuous line with cabling.**
Note: the last fixture of the row must be of the standard type.



IP66 IK10

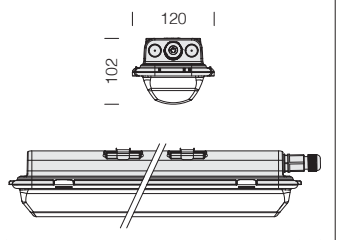

LED: power factor: ≥0,95. Luminous flux maintenance 90%: 80.000h (L90B10).

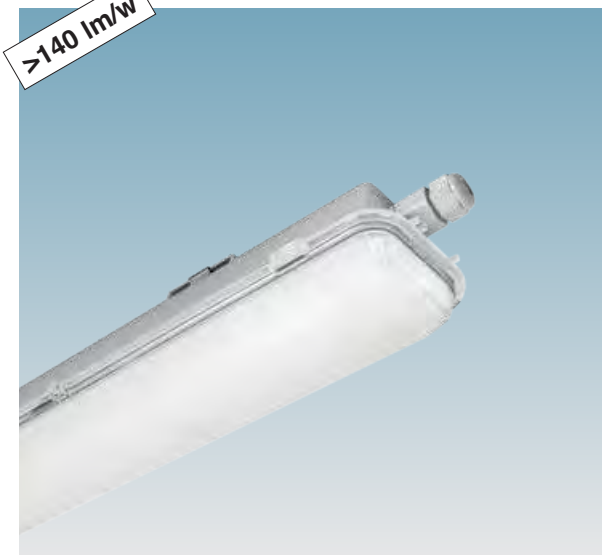

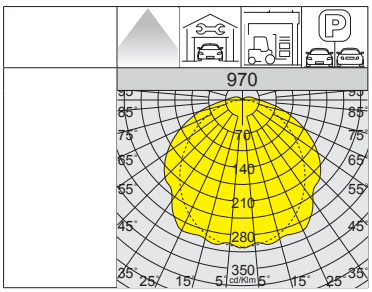

L90 B10 80.000h

RG0

+40 C° -30

EM S.A.

DIMM DIG

NO

LOW FLICKER

970 Thema - LED							
		CLD		CLD E	CLD D-D (DALI)		LUMEN OUTPUT (tq= 25 °C)
LED	colour	weight	code	code	code	W tot	K - ølm - CRI
LED	grey	1.80	164731-00	164731-07	164731-0041	**19**	4000K - 2850lm - CRI>80
			164734-00	164734-07	164734-0041	**34**	4000K - 4760lm - CRI>80

970 Thema - LED							
		CLD		CLD E	CLD D-D (DALI)		LUMEN OUTPUT (tq= 25 °C)
LED	colour	weight	code	code	code	W tot	K - ølm - CRI
LED	grey	1.80	164732-00	164732-07	164732-0041	**25**	4000K - 3750lm - CRI>80
			164735-00	164735-07	164735-0041	**49**	4000K - 6862lm - CRI>80

Upon request:
• with radar sensor for **ON-OFF fixtures: subcode -19** (remote control cod. **81418618** to be purchased separately; it **allows modification of the fixture parameters after installation**);
• with emergency wiring with centralized power supply: **sub-code -0050** (the ceiling lamps are supplied with a single power outlet capable of managing both standard power mode and emergency-EM mode).

IP66 IK10

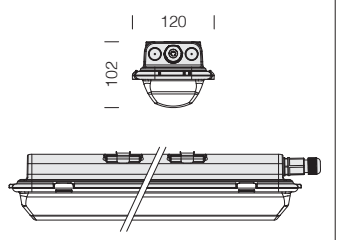

LED: power factor: ≥0,95. Luminous flux maintenance 90%: 80.000h (L90B10).



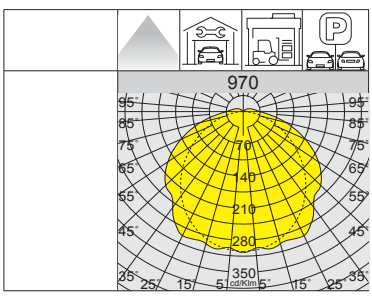

L90 B10 80.000h

RG0

+40 C° -30

NO

LOW FLICKER

970 Thema - LED					
		CLD			LUMEN OUTPUT (tq= 25 °C)
LED	colour	weight	code	W tot	K - ølm - CRI
LED	grey	1.80	164734-0072	**34**	4000K - 4760lm - CRI>80

970 Thema - LED					
		CLD			LUMEN OUTPUT (tq= 25 °C)
LED	colour	weight	code	W tot	K - ølm - CRI
LED	grey	1.80	164735-0072	**49**	4000K - 6862lm - CRI>80

Upon request:
• with radar sensor for **ON-OFF fixtures: subcode -19** (remote control cod. **81418618** to be purchased separately; it **allows modification of the fixture parameters after installation**);
• with emergency wiring with centralized power supply: **sub-code -0050** (the ceiling lamps are supplied with a single power outlet capable of managing both standard power mode and emergency-EM mode).



CONNECTION TO THE QUICK CONNECTOR

The ceiling fixture comes with a quick connector to connect the unit to the electrical box **easily** and **safely** in **just a few seconds** and **without opening the unit**.

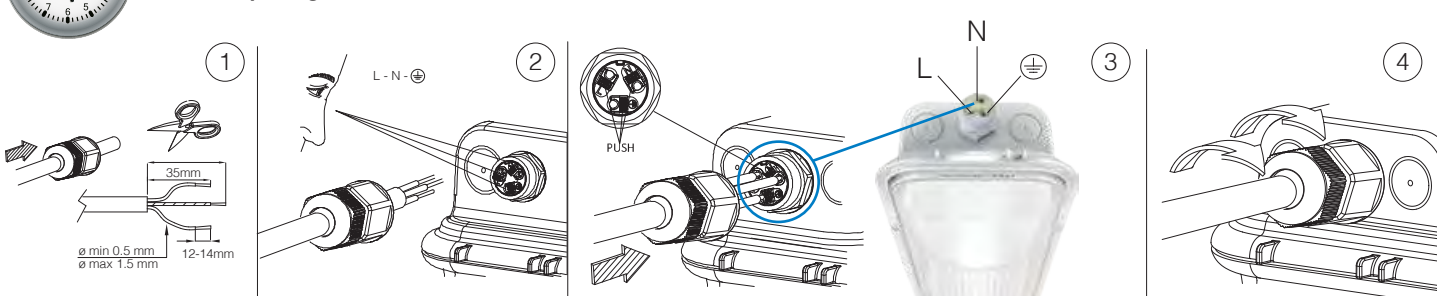

GENERAL CHARACTERISTICS

Housing: injection moulded, in grey polycarbonate, shatter-proof, UV-stabilised, highly resistant to mechanical impacts thanks to the reinforced structure with internal ribbing.

Diffuser: injected moulded in polycarbonate with internal ribbing for greater lighting control, in V2 self-extinguishing, UV-stabilised material; its smooth outer finish makes cleaning easier and increases lighting efficiency. Equipped with stainless steel screw clamping.

Reflector: in galvanised steel, previously stone-enamelled with UV-stabilised polyester resin. Clamping device manufactured directly onto the housing.

Standard supply: eco-friendly and anti-aging expanded polyurethane injected gasket. The fixing brackets for ceiling and suspension mounting are in stainless steel; waterproof connector for quick installation. The fixture is secured to the fixing brackets through quick connectors.

For installations with direct exposure to sunlight, we recommend using Forma LED. Check the compatibility between the material constituting the product and the space where it will be installed.

LED: power factor: ≥0,95.
Luminous flux maintenance 90%: 100.000h (L90B10).
Photobiological safety class: exempt group.
Allowable ambient temperature : -30°C to + 40°C (excluding emergency versions).

OTHER CHARACTERISTICS



Greater performance
The fixture is made with first-choice polycarbonate stabilised against UV light. It has been treated to eliminate glare without affecting performance. Polycarbonate with excellent diffusion coefficient and lighting transmission.

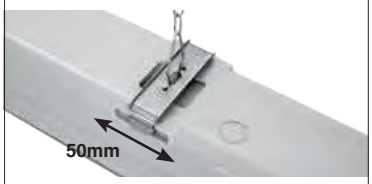

The stainless steel bracket supplied as standard allows easy and safe installation of the lighting fixture onto the ceiling/wall (with the possibility to adjust the mounting space).

The standard spring loop allows quick connection to any chain suspension system.



STAINLESS steel safety screw-type clamping. It can be opened to replace the batteries as needed. Injected gasket in anti-aging and eco-friendly material.

OTHER INFORMATION



Self-extinguishing
U.L.94 is a widely accepted USA flammability standard that classifies plastics according to how they burn. The **HYDRO** fixture is made of **V2** self-extinguishing plastic material: burning stops within **25 seconds**.

Glow wire test
Glow wire tested at 850°C.

ALL LIGHT: no glare
The special surface finish of the diffuser allows light to escape, creating an "all light" effect. The fluted diffuser spreads light evenly without leaving dark areas.



-0050 EM-EC Version **CLD EC** wiring with **subcode -0050:** permanently mounted fixture, operating in AC/DC mode, with centralized emergency device, not incorporated into the fixture.

UPON REQUEST

Built-in RADAR SENSOR (sub-code -19): is an automatic sensor that immediately sense the presence of people's movements and anyone walking past

Possibility of centralized lighting point control or via **external** presence/lighting sensors (see chapter *Lighting management systems and recommendations*).



AMBER LED Version with special **AMBER colour LED** sources for wine processing and storage facilities. **Note:** when ordering, make sure you select the **AMBER LED** type best suited for your lighting design and installation needs.

AMBER LED light spectrum with no blue or violet wavelengths.

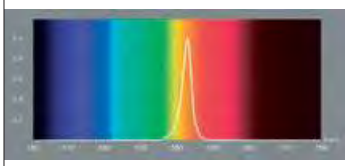

-94 ED 1-10V With **1-10V dimmable electronic gear + emergency: subcode -94.**

ACCESSORIES AND INSTALLATION

acc. 6036 universal conn.	
galvanised	132987-00
Made of galvanized steel. To install non-corrosive fixtures on track art. 6000. Bag containing 2 pieces.	

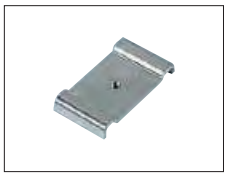

acc. 975 protection guard		
white	**1300mm**	165564-00
White plastic-coated steel rod. To be installed directly on the ceiling.		

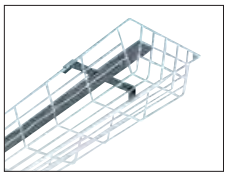

acc. 978 wall bracket	
galvanized	998078-00
Made of galvanized steel. For installation of Hydro LED fixtures on walls. Bag containing 2 pieces.	



Hydro in continuous row with special lighting fitting with cable

For the installation in continuous row, order the special body with subcode **-0072** with extra price.
Note: the last fixture of the row must be of the standard type.



acc. 938 junction sleeve	
grey	998073-00
Polycarbonate, for jointing and transit of power supply cables (internal Ø 13 mm) between lighting fixtures (max distance 30 m). **2 per pack.**	

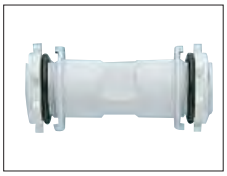

L90 B10 100.000h

RG0

+40 C° -30

DIMM DIG

EM S.A.

-0050 EM-EC

NO

LOW FLICKER

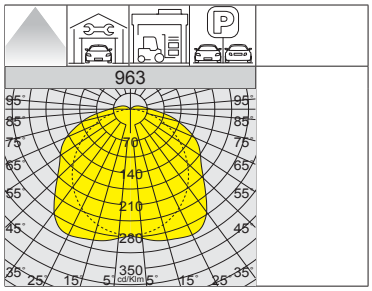



IP66 IK10

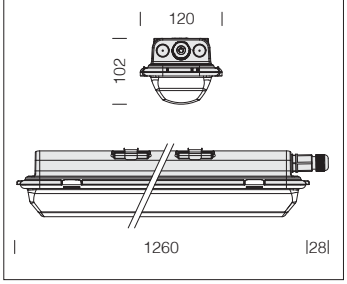

LED: power factor: ≥0,95. Luminous flux maintenance 90%: 100.000h (L90B10).

963 Hydro - LED

		CLD		CLD D-D (DALI)		LUMEN OUTPUT (tq= 25 °C)
LED	colour	weight	code	code	W tot	K - ølm - CRI
LED	grey	2.40	164762-00	164762-0041	**20**	4000K - 3460lm - CRI>80
			164764-00	164764-0041	**34**	4000K - 5880lm - CRI>80

963 Hydro EM - LED

		CLD E		CLD EC		LUMEN USCENTI (tq= 25 °C)
LED	colour	weight	code	code	W tot	K - ølm - CRI
LED	grey	2.40	164762-07	164762-0050	**20**	4000K - 3460lm - CRI>80
			164764-07	164764-0050	**34**	4000K - 5880lm - CRI>80
Emergency wiring with centralized power supply: **sub-code -0050** (the ceiling lamps are supplied with a single power outlet capable of managing both standard power mode and emergency-EM mode).						

Upon request:
- with radar sensor for **ON-OFF fixtures: subcode -19** (remote control cod. **81418618** to be purchased separately; it **allows modification of the fixture parameters after installation**);
- with pass-through wiring for **continuous line mounting: subcode -0072**;
- with **1-10V dimmable electronic gear + emergency: subcode -94**;

L90 B10 100.000h
RG0
+40 C° -30
DIMM DIG
EM S.A.
-0050 EM-EC
NO
LOW FLICKER

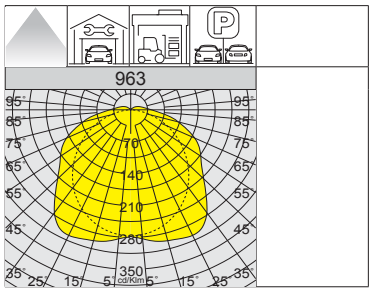

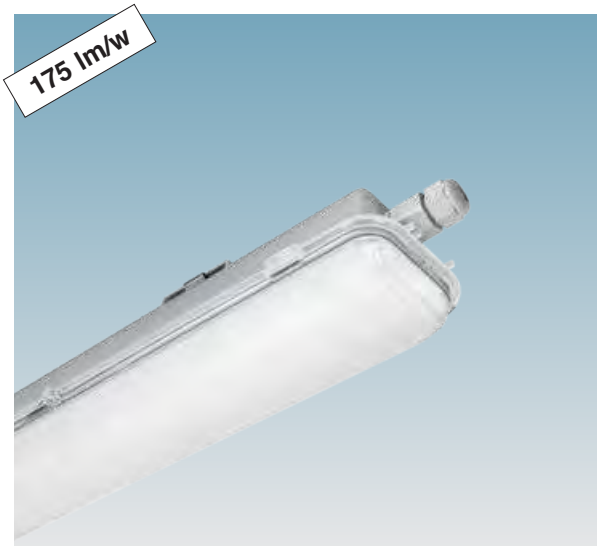

IP66 IK10

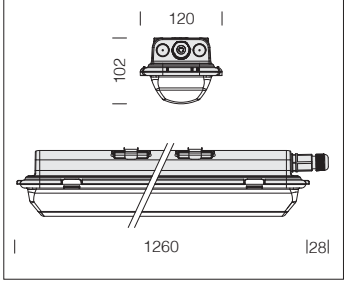

LED: power factor: ≥0,95. Luminous flux maintenance 90%: 100.000h (L90B10).

963 Hydro - LED

		CLD		CLD D-D (DALI)		LUMEN OUTPUT (tq= 25 °C)
LED	colour	weight	code	code	W tot	K - ølm - CRI
LED	grey	2.40	164763-00	164763-0041	**25**	4000K - 4250lm - CRI>80
			164765-00	164765-0041	**47**	4000K - 8232lm - CRI>80
			164766-00	164766-0041	**56**	4000K - 9561lm - CRI>80

963 Hydro EM - LED

		CLD E		CLD EC		LUMEN OUTPUT (tq= 25 °C)
LED	colour	weight	code	code	W tot	K - ølm - CRI
LED	grey	2.40	164763-07	164763-0050	**25**	4000K - 4250lm - CRI>80
			164765-07	164765-0050	**47**	4000K - 8232lm - CRI>80
			164766-07	164766-0050	**56**	4000K - 9561lm - CRI>80
Emergency wiring with centralized power supply: **sub-code -0050** (the ceiling lamps are supplied with a single power outlet capable of managing both standard power mode and emergency-EM mode).						

Upon request:
- with radar sensor for **ON-OFF fixtures: subcode -19** (remote control cod. **81418618** to be purchased separately; it **allows modification of the fixture parameters after installation**);
- with pass-through wiring for **continuous line mounting: subcode -0072**;
- with **1-10V dimmable electronic gear + emergency: subcode -94**;

IP66 IK10

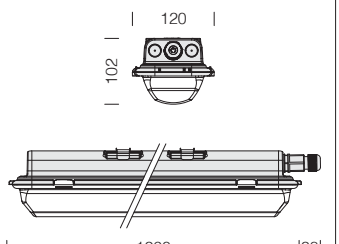

LED: power factor: ≥0,95. Luminous flux maintenance 90%: 100.000h (L90B10).

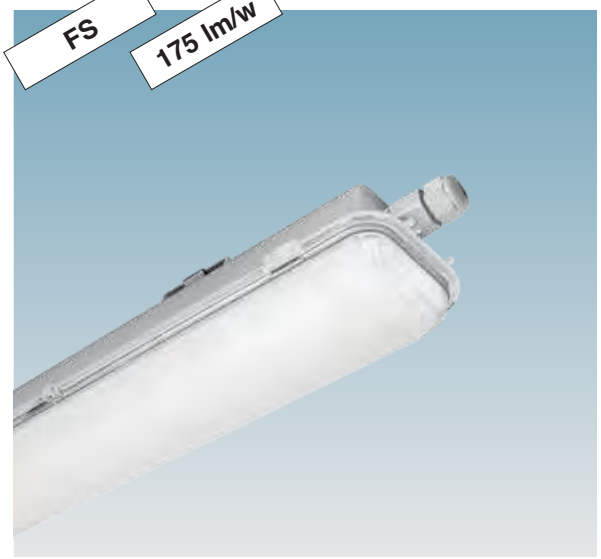

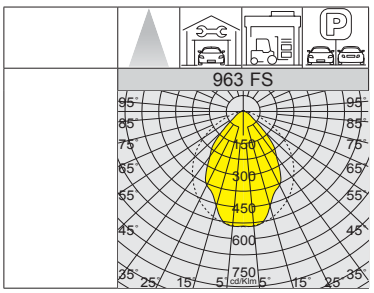

L90 B10 100.000h

RG0

+40 C° -30

NO

LOW FLICKER

WATER-PROOF

963 Hydro FS - narrow beam - LED					
		CLD			LUMEN OUTPUT (tq= 25 °C)
LED	colour	weight	code	W tot	K - ølm - CRI
LED	grey	2.40	164764-22	**34**	4000K - 5528lm - CRI>80

963 Hydro FS - narrow beam - LED					
		CLD			LUMEN OUTPUT (tq= 25 °C)
LED	colour	weight	code	W tot	K - ølm - CRI
LED	grey	2.40	164765-22	**47**	4000K - 7983lm - CRI>80

Upon request:
- with pass-through wiring for **continuous line mounting: subcode -0072;**
- with **1-10V dimmable electronic gear + emergency: subcode -94;**
- with emergency wiring with centralized power supply: **sub-code -0050** (the ceiling lamps are supplied with a single power outlet capable of managing both standard power mode and emergency-EM mode).

IP66 IK10

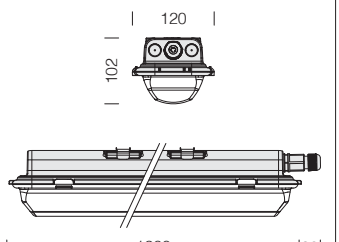

LED: power factor: ≥0,95. Luminous flux maintenance 90%: 100.000h (L90B10).

Version ideal for environments where temperatures reach **-40°**÷ **+55 °C**.



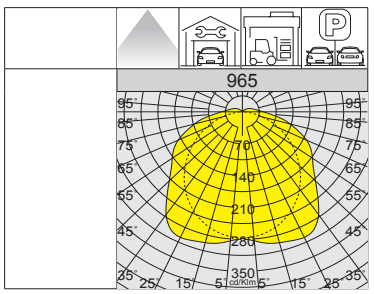





L90 B10 100.000h

RG0

+55 C° -40

NO

LOW FLICKER

965 Hydro ICE/HT - HIGH/LOW TEMPERATURE - LED					
		CLD			LUMEN OUTPUT (tq= 25 °C)
LED	colour	weight	code	W tot	K - ølm - CRI
LED	grey	1.90	164780-00	**31**	4000K - 4992lm - CRI>80
			164781-00	**42**	4000K - 6989lm - CRI>80

Upon request:
- with pass-through wiring for **continuous line mounting: subcode -0072;**
- with emergency wiring with centralized power supply: **sub-code -0050.**(the ceiling lamps are supplied with a single power outlet capable of managing both standard power mode and emergency-EM mode; for EM version please contact our customer service)

GENERAL CHARACTERISTICS

Housing: injection moulded, in grey polycarbonate, shatter-proof, UV-stabilised, highly resistant to mechanical impacts thanks to the reinforced structure with internal ribbing.

Diffuser: injected moulded in polycarbonate with internal ribbing for greater lighting control, in V2 self-extinguishing, UV-stabilised material; its smooth outer finish makes cleaning easier and increases lighting efficiency. Equipped with stainless steel screw clamping.

Reflector: in galvanised steel, previously stone-enamelled with UV-stabilised polyester resin. Clamping device manufactured directly onto the housing.

Standard supply: eco-friendly and anti-aging expanded polyurethane injected gasket. The fixing brackets for ceiling/suspension mounting are in stainless steel and waterproof connector for quick installation. The fixture is secured to the fixing brackets through quick connectors.

For installations with direct exposure to sunlight, we recommend using Forma LED. Check the compatibility between the material constituting the product and the space where it will be installed.

LED: power factor: ≥0,95.
Luminous flux maintenance 90%: 100.000h (L90B10).
Photobiological safety class: exempt group.
Allowable ambient temperature : -30°C to + 40°C (excluding emergency versions).

OTHER CHARACTERISTICS



Greater performance
The fixture is made with first-choice polycarbonate stabilised against UV light. It has been treated to eliminate glare without affecting performance. Polycarbonate with excellent diffusion coefficient and lighting transmission.

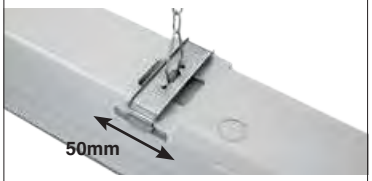

The stainless steel bracket supplied as standard allows easy and safe installation of the lighting fixture onto the ceiling/wall (with the possibility to adjust the mounting space). **The standard spring loop** allows quick connection to any chain suspension system.



STAINLESS steel safety screw-type clamping. It can be opened to replace the batteries as needed. Injected gasket in anti-aging and eco-friendly material.

OTHER INFORMATION



Self-extinguishing: U.L.94 is a widely accepted USA flammability standard that classifies plastics according to how they burn. The **HYDRO** fixture is made of **V2** self-extinguishing plastic material: burning stops within **25 seconds**.

Glow wire test
Glow wire tested at 850°C.

ALL LIGHT: no glare
The special surface finish of the diffuser allows light to escape, creating an "all light" effect. The fluted diffuser spreads light evenly without leaving dark areas.



QUICK CONNECTOR



The quick connector supplied as standard allows the ceiling lighting fixture to be wired directly to the main system, which the installer can do either on the ground or at height. In just a few simple steps, the fixture can be installed **without opening it**, saving both time and labour costs

DRIVER AC/DC

As standard, the fixture is equipped with an AC/DC driver, powered by a centralised emergency system, which is not incorporated into the fixture

UPON REQUEST

Built-in RADAR SENSOR (sub-code -19): is an automatic sensor that immediately sense the presence of people's movements and anyone walking past

Possibility of centralized lighting point control or via **external** presence/lighting sensors (see chapter *Lighting management systems and recommendations*).

CONNECTION TO THE QUICK CONNECTOR

The fixture comes with a quick connector that allows **simple** and **secure** connection to the general system; wiring can be carried out by the installer either on the ground or at height, all in just a **few seconds** and **without opening the fixture**.

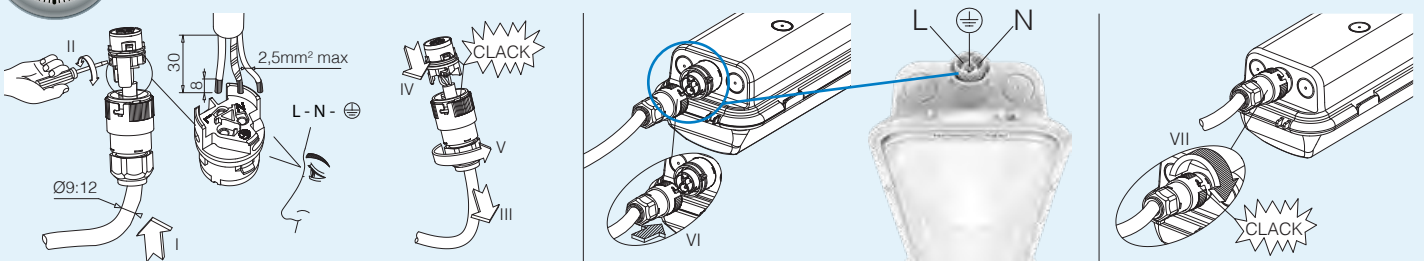

ACCESSORIES AND INSTALLATION

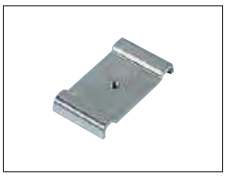

acc. 6036 universal conn.	
galvanised	132987-00

Made of galvanized steel. To install non-corrosive fixtures on track art. 6000. Bag containing 1 piece.



acc. 978 wall bracket	
galvanized	998078-00

Made of galvanized steel. For installation of Thema LED fixtures on walls. Bag containing 2 pieces.

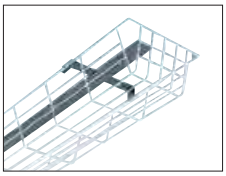

acc. 975 protection guard		
white	**1300mm**	165564-00

White plastic-coated steel rod. To be installed directly on the ceiling.

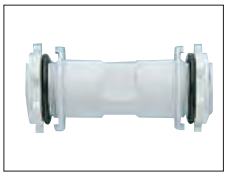

acc. 938 junction sleeve	
grey	998073-00

Polycarbonate, for jointing and transit of power supply cables (internal Ø 13 mm) between lighting fixtures (max distance 30 m). **2 per pack.**

Continuous row with special lighting fitting with cable
For the installation in continuous row, order the special body with subcode **-0072** with extra price.
Note: the last fixture of the row must be of the standard type.



IP66 IK10

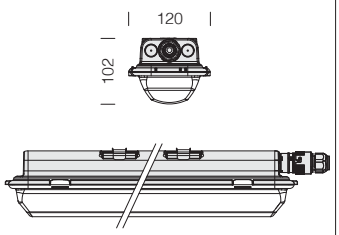

LED: power factor: ≥0,95.
Luminous flux maintenance 90%: 100.000h (L90B10).

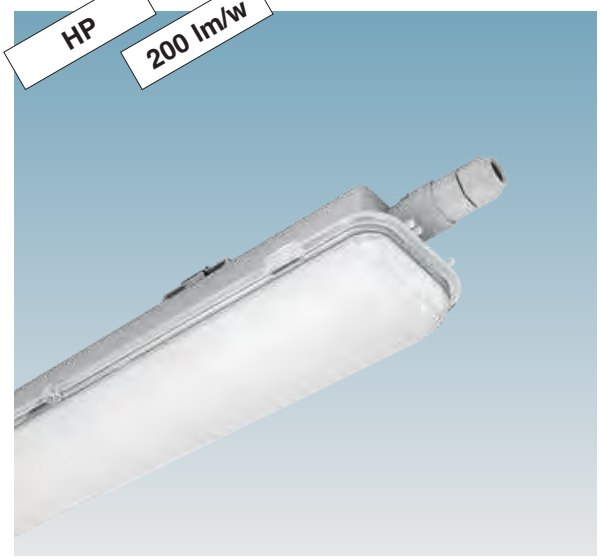

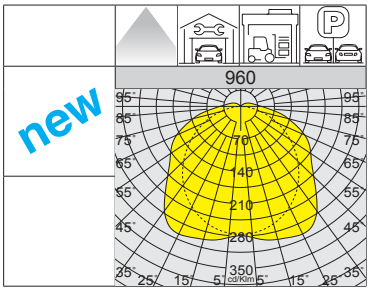

L90 B10 100.000h
RG0
+40 C° -30
NO
LOW FLICKER

WATER-PROOF

960 Hydro HP - HIGH PERFORMANCE - LED					
		CLD			LUMEN OUTPUT (tq= 25 °C)
LED	colour	weight	code	W tot	K - ølm - CRI
LED	grey	1.90	164751-00	18	4000K - **3760lm** - CRI>80
			164752-00	23	4000K - **4610lm** - CRI>80
Fixture supplied as standard with AC/DC driver for centralised emergency systems (the ceiling lamps are supplied with a single power outlet capable of managing both standard power mode and emergency-EM mode).					

Upon request:
- with radar sensor for **ON-OFF fixtures: subcode -19** (remote control cod. **81418618** to be purchased separately; it **allows modification of the fixture parameters after installation**);
- with pass-through wiring for **continuous line mounting: subcode -0072**;

IP66 IK10

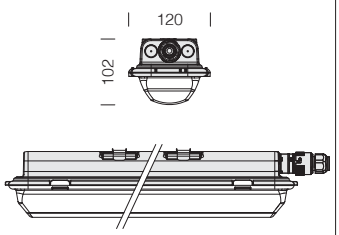

LED: power factor: ≥0,95.
Luminous flux maintenance 90%: 100.000h (L90B10).

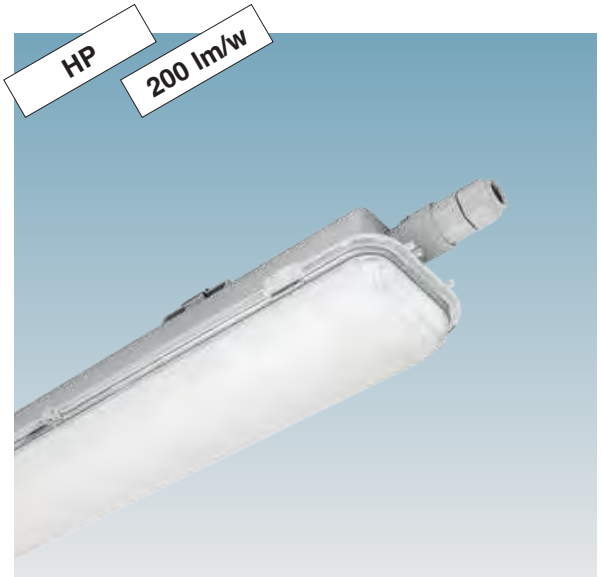

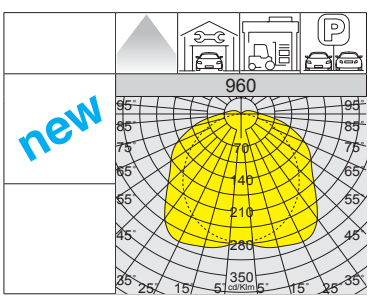

L90 B10 100.000h
RG0
+40 C° -30
NO
LOW FLICKER

960 Hydro HP - HIGH PERFORMANCE - LED					
		CLD			LUMEN OUTPUT (tq= 25 °C)
LED	colour	weight	code	W tot	K - ølm - CRI
LED	grey	1.90	164754-00	27	4000K - **5490lm** - CRI>80
			164755-00	38	4000K - **7623lm** - CRI>80
Fixture supplied as standard with AC/DC driver for centralised emergency systems (the ceiling lamps are supplied with a single power outlet capable of managing both standard power mode and emergency-EM mode).					

Upon request:
- with radar sensor for **ON-OFF fixtures: subcode -19** (remote control cod. **81418618** to be purchased separately; it **allows modification of the fixture parameters after installation**);
- with pass-through wiring for **continuous line mounting: subcode -0072**;



GENERAL CHARACTERISTICS

Housing: injection moulded, in grey polycarbonate, shatter-proof, UV-stabilised, highly resistant to mechanical impacts thanks to the reinforced structure with internal ribbing.

Standard supply: AISI 316 stainless steel fixing brackets for ceiling and suspension mounting; anti-condensation valve for air recirculation and waterproof connector for quick installation with no need to open the fixture.



L90 B10 50.000h

RG0

+40 C° -20

NO

LOW FLICKER

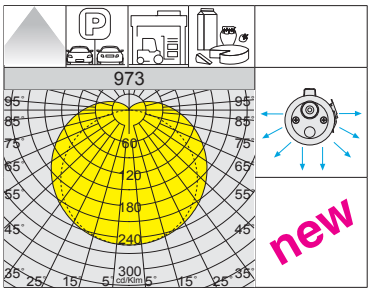

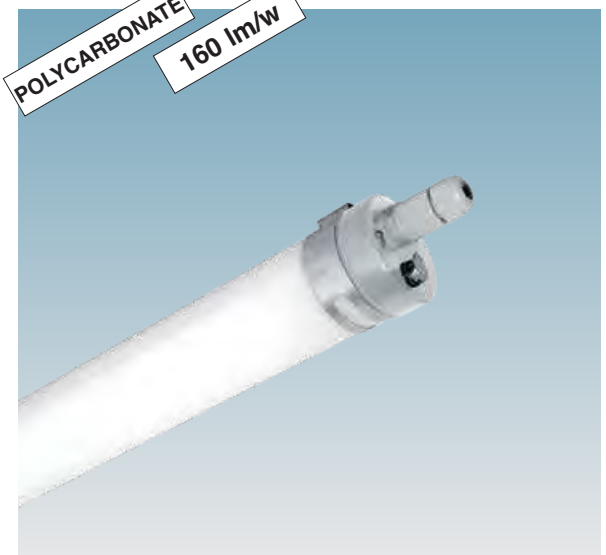

IP69IK10

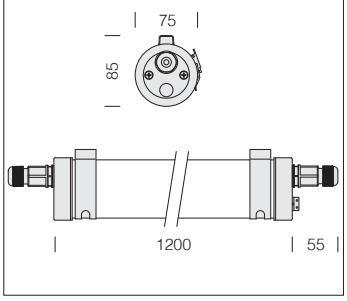

LED: power factor: ≥0,95. Luminous flux maintenance 90%: 50.000h (L90B10).

973 Hydro STYLE - LED						
		CLD				LUMEN OUTPUT (tq= 25 °C)
LED	colour	weight	L	code	W tot	K - ølm - CRI
LED	white	1,60	1200	164792-00	36	4000K - **5760lm** - CRI>80

972 Hydro STYLE:
special version for rooms with a high concentration of chemical products, gas and vapours, such as warehouses, chemical plants, food processing plants or covered external areas (breeding farms). In these fixtures, **the housing in opal PMMA** are made in a special material capable of resisting to **chemical agents** (*ammonia, alkaline solutions, soap, alcohol and oil detergents - see table*).

CODE	Comment
A	resistant
I	non resistant

Chemical	Appearance
Acetic acid (5%)	A
Acetone	I
Ammonium hydroxide (sp. gr. 0.90)	A
Ammonium hydroxide (10%)	A
Blasocut Kombi (5% in water)	A
Castrol SYNTILO 9913 (5% in water)	A
Detergent sollution (0.025%)	A
Diesel Fuel	A
Dimethyl formamide	I
Distilled water	A
Ethanolamine (5%)	A
Ethyl alcohol (50%)	A
Ethyl alcohol (95%)	A
Hydrochloric acid 10%	A
Isopropanol	A
Lipid solution (2%)	A
Methyl alcohol	A
Olive oil	A
Soap solution (1%)	A
Sodium hypochlorite (5%)	A
Sodium chloride solution (10%)	A
Sodium hydroxide solution (10%)	A
Sulfuric acid 10%	A
Toluene	I

GENERAL CHARACTERISTICS

Housing: in opal PMMA with AISI 316 stainless steel end caps, resistant in environments containing high levels of ammonia and detergents.

Standard supply: AISI 316 stainless steel fixing brackets for ceiling and suspension mounting; anti-condensation valve for air recirculation and waterproof connector for quick installation with no need to open the fixture.





As standard, Hydro STYLE comes with **pass-through wiring and connectors** for installation **in continuous line with cabling.**



IP69IK08

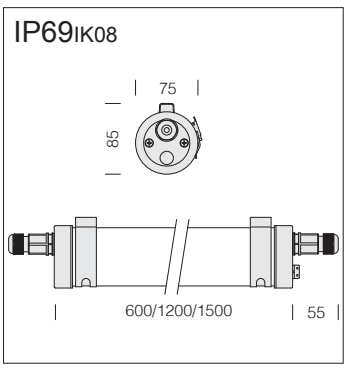

LED: power factor: ≥0,95.
Luminous flux maintenance 90%: 50.000h (L90B10).



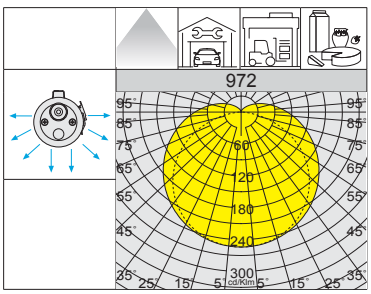



L90 B10 50.000h

RG0

+40 C° -20

LOW FLICKER

3000K

4000K

5000K

972 Hydro STYLE - LED

		CLD			CLD D-D (DALI)		LUMEN OUTPUT (tq= 25 °C)
LED	colour	weight	L	code	code	W tot	K - ølm - CRI
LED	white	1.00	600	164782-00		**18**	4000K - 2880lm - CRI>80
				164782-39			3000K - 2736lm - CRI>80
				164782-37			5000K - 2880lm - CRI>80
LED	white	1.60	1200	164783-00	164783-0041	**36**	4000K - 5760lm - CRI>80
				164783-39			3000K - 5472lm - CRI>80
				164783-37			5000K - 5760lm - CRI>80
LED	white	2.00	1500	164784-00	164784-0041	**50**	4000K - 8000lm - CRI>80
				164784-39			3000K - 7600lm - CRI>80
				164784-37			5000K - 8000lm - CRI>80



GENERAL CHARACTERISTICS

Housing: injection moulded, vandal resistant, UV stabilised RAL 7035 grey polycarbonate, high mechanical resistance thanks to the stiffening ribs inside the structure.

Diffuser: injection moulded V2 self-extinguishing , UV stabilised clear polycarbonate, prismatic inside for better light control. The smooth outside finishing facilitates cleaning, essential to ensure maximum lighting efficiency at all times.

Reflector: in galvanised steel, previously stove-enamelled with UV-stabilised polyester resin.

Equipment: waterproof connector for quick installation, no need to open the fixture.

Material compatible with food industry environments.
Mounting is also possible at low or very low temperatures (instant start and no flux decay).

For applications with direct exposure to sunlight, we recommend using Forma LED. Check the compatibility between the material constituting the product and the space where it will be installed.

LED: power factor: ≥0,9.
Luminous flux maintenance 90%: 80.000h (L90B10).
Photobiological safety class: exempt group.
Allowable ambient temperature : -30°C to + 40°C (excluding emergency versions).

OTHER CHARACTERISTICS



Greater performance
The fixture is made with first-choice polycarbonate stabilised against UV light. It has been treated to eliminate glare without affecting performance. Polycarbonate with excellent diffusion coefficient and lighting transmission.



The stainless steel bracket supplied as standard allows easy and safe installation of the lighting fixture onto the ceiling/wall (with the possibility to adjust the mounting space).

The standard spring loop allows quick connection to any chain suspension system.



Water-proof lighting fitting upon request with stainless steel latches (**690mm - 1300mm - 1600mm**) to be ordered using **sub-code -0077** at an extra price.

OTHER INFORMATION



Self-extinguishing
U.L.94 is a widely accepted USA flammability standard that classifies plastics according to how they burn. The **ECHO** fixture is made of **V2** self-extinguishing plastic material: burning stops within **25 seconds**.

Glow wire test
Glow wire tested at 850°C.

ALL LIGHT: no glare
The special surface finish of the diffuser allows light to escape, creating an "all light" effect. The fluted diffuser spreads light evenly without leaving dark areas.



-0050 EM-EC

Version **CLD EC** wiring with **subcode -0050:** permanently mounted fixture, operating in AC/DC mode, with centralized emergency device, not incorporated into the fixture.

UPON REQUEST

Built-in RADAR SENSOR (sub-code -19): is an automatic sensor that immediately sense the presence of people's movements and anyone walking past

Possibility of centralized lighting point control or via **external** presence/lighting sensors (see chapter *Lighting management systems and recommendations*).

AMBER LED

Version with special **AMBER colour LED** sources for wine processing and storage facilities. **Note:** when ordering, make sure you select the **AMBER LED** type best suited for your lighting design and installation needs.

AMBER LED light spectrum with no blue or violet wavelengths.

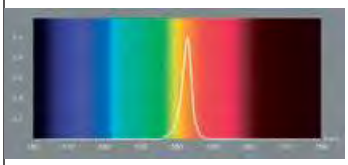

Luminaire compliant with the requirements of the qualification protocol issued by the Comité Champagne for amber lighting fixtures used for the storage of bottles.



ACCESSORIES AND INSTALLATION

acc. 6036 universal conn.	
galvanised	132987-00
Made of galvanized steel. To install non-corrosive fixtures on track art. 6000. Bag containing 2 pieces.	



Continuous row with special lighting fitting with cable

For the installation in continuous row, order the special body with subcode **-0072** with extra price.
Note: the last fixture of the row must be of the standard type.



acc. 975 protection guard		
white	**1300mm**	165564-00
white	**1600mm**	165565-00
White plastic-coated steel rod. To be installed directly on the ceiling.		

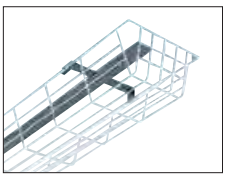

acc. 978 wall bracket	
galvanized	998078-00
Made of galvanized steel. For installation of Echo LED fixtures on walls. Bag containing 2 pieces.	



acc. 938 junction sleeve	
grey	998073-00
Polycarbonate, for jointing and transit of power supply cables (internal Ø 13 mm) between lighting fixtures (max distance 30 m). **2 per pack.**	

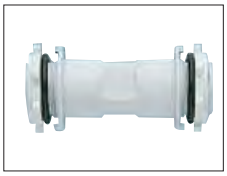

L90 B10 80.000h
RG0
+40 C° -30
DIMM DIG
EM S.A.
-0050 EM-EC
NO
LOW FLICKER

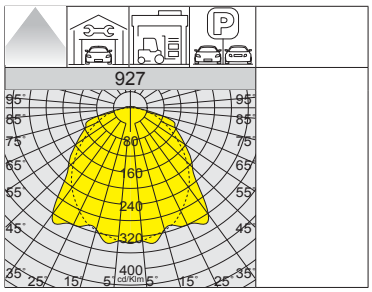

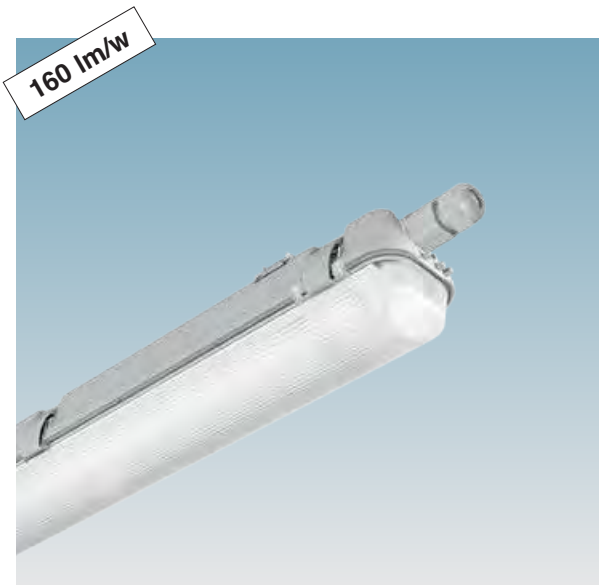

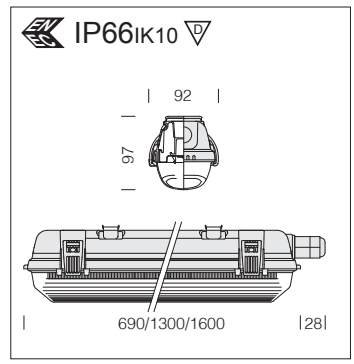

LED: power factor: ≥0,9.
Luminous flux maintenance 90%: 80.000h (L90B10).

927 Echo - single LED module

		CLD			CLD D-D (DALI)		LUMEN OUTPUT (tq= 25 °C)
LED	colour	weight	L	code	code	W tot	K - ølm - CRI
LED	grey	0.80	690	164700-00		**11**	4000K - 1593lm - CRI>80
		1.60	1300	164701-00	164701-0041	**19**	4000K - 2870lm - CRI>80
		1.80	1600	164702-00	164702-0041	**24**	4000K - 3830lm - CRI>80

927 Echo EM - single LED module

		CLD E			CLD EC		LUMEN OUTPUT (tq= 25 °C)
LED	colour	weight	L	code	code	W tot	K - ølm - CRI
LED	grey	0.80	690		164700-0050	**11**	4000K - 1593lm - CRI>80
		1.60	1300	164701-07	164701-0050	**19**	4000K - 2870lm - CRI>80
		1.80	1600	164702-07	164702-0050	**24**	4000K - 3830lm - CRI>80

Emergency wiring with centralized power supply: **sub-code -0050** (the ceiling lamps are supplied with a single power outlet capable of managing both standard power mode and emergency-EM mode).

Upon request with radar sensor for **ON-OFF fixtures: subcode -19** (remote control cod. **81418618** to be purchased separately; it **allows modification of the fixture parameters after installation**).

L90 B10 80.000h
RG0
+40 C° -30
DIMM DIG
EM S.A.
-0050 EM-EC
NO
LOW FLICKER

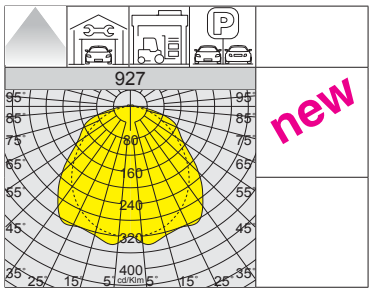



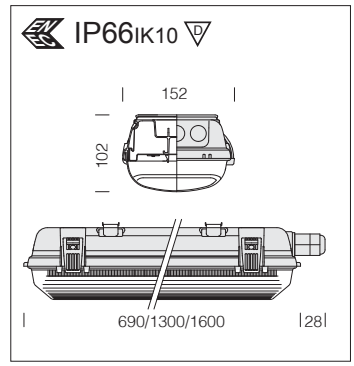

LED: power factor: ≥0,9.
Luminous flux maintenance 90%: 80.000h (L90B10).

927 Echo - twin LED module

		CLD			CLD D-D (DALI)		LUMEN OUTPUT (tq= 25 °C)
LED	colour	weight	L	code	code	W tot	K - ølm - CRI
LED	grey	1.40	690	164703-00	164703-0041	**21**	4000K - 3355lm - CRI>80
		2.30	1300	164704-00	164704-0041	**32**	4000K - 6024lm - CRI>80
		2.70	1600	164705-00	164705-0041	**40**	4000K - 7913lm - CRI>80
		2.70	1600	164709-00	164709-0041	**50**	4000K - **9350lm** - CRI>80

927 Echo EM - twin LED module

		CLD E			CLD EC		LUMEN OUTPUT (tq= 25 °C)
LED	colour	weight	L	code	code	W tot	K - ølm - CRI
LED	grey	1.40	690	164703-07	164703-0050	**21**	4000K - 3355lm - CRI>80
		2.30	1300	164704-07	164704-0050	**32**	4000K - 6024lm - CRI>80
		2.70	1600	164705-07	164705-0050	**40**	4000K - 7913lm - CRI>80
		2.70	1600	164709-07	164709-0050	**50**	4000K - **9350lm** - CRI>80

Emergency wiring with centralized power supply: **sub-code -0050** (the ceiling lamps are supplied with a single power outlet capable of managing both standard power mode and emergency-EM mode).

Upon request with radar sensor for **ON-OFF fixtures: subcode -19** (remote control cod. **81418618** to be purchased separately; it **allows modification of the fixture parameters after installation**).

IP66 IK10

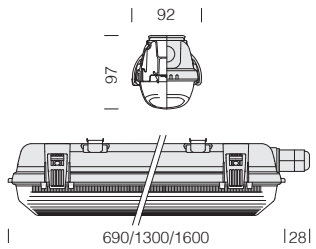

LED: power factor: ≥0,9.
Luminous flux maintenance 90%: 80.000h (L90B10).

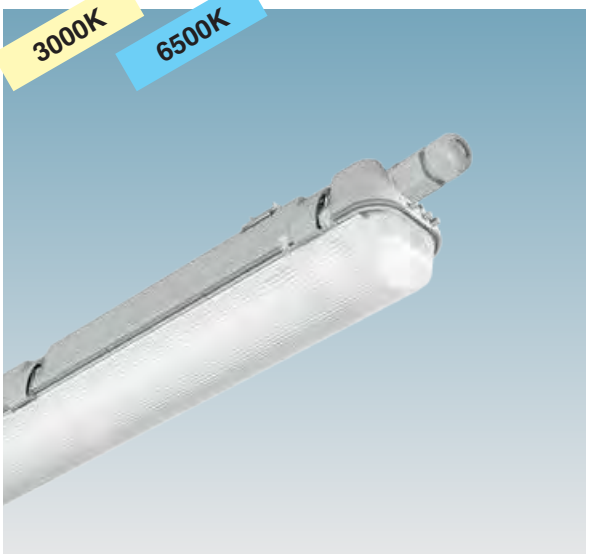

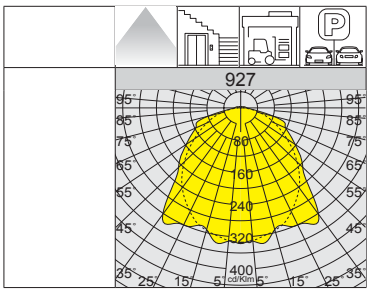

L90 B10 80.000h
RG0
+40 C° -30
EM S.A.
NO
LOW FLICKER

WATER-PROOF

927 Echo - 3000K/6500K single LED module

		CLD			CLD E		LUMEN OUTPUT (tq= 25 °C)
LED	colour	weight	L	code	code	W tot	K - ølm - CRI
LED	grey	0.80	690	164700-39		**11**	3000K - 1441lm - CRI>80
		1.60	1300	164701-39		**19**	3000K - 2595lm - CRI>80
		1.80	1600	164702-39		**24**	3000K - 3461lm - CRI>80
LED	grey	0.80	690	164700-0083		**11**	6500K - 1593lm - CRI>80
		1.60	1300	164701-0083	164701-0783	**19**	6500K - 2870lm - CRI>80
		1.80	1600	164702-0083	164702-0783	**24**	6500K - 3830lm - CRI>80

IP66 IK10

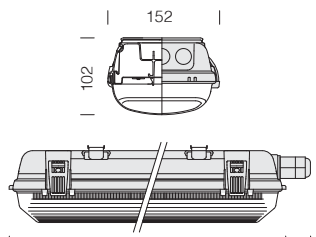

LED: power factor: ≥0,9.
Luminous flux maintenance 90%: 80.000h (L90B10).

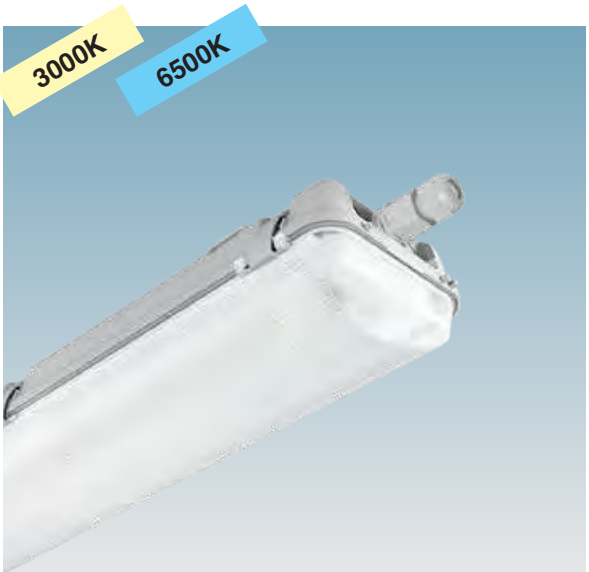

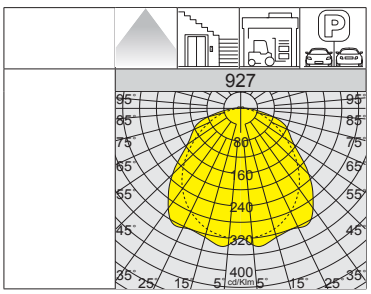

L90 B10 80.000h
RG0
+40 C° -30
EM S.A.
NO
LOW FLICKER

927 Echo - 3000K/6500K twin LED module

		CLD			CLD E		LUMEN OUTPUT (tq= 25 °C)
LED	colour	weight	L	code	code	W tot	K - ølm - CRI
LED	grey	1.40	690	164703-39		**21**	3000K - 3031lm - CRI>80
		2.30	1300	164704-39		**32**	3000K - 5723lm - CRI>80
		2.70	1600	164705-39		**40**	3000K - 7518lm - CRI>80
LED	grey	1.40	690	164703-0083	164703-0783	**21**	6500K - 3355lm - CRI>80
		2.30	1300	164704-0083	164704-0783	**32**	6500K - 6024lm - CRI>80
		2.70	1600	164705-0083	164705-0783	**40**	6500K - 7913lm - CRI>80



L90 B10 80.000h

RG0

+40 C° -30

DIMM DIG

-0050 EM-EC

NO

LOW FLICKER

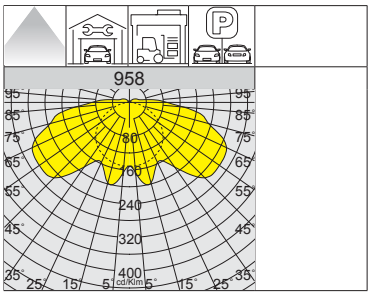

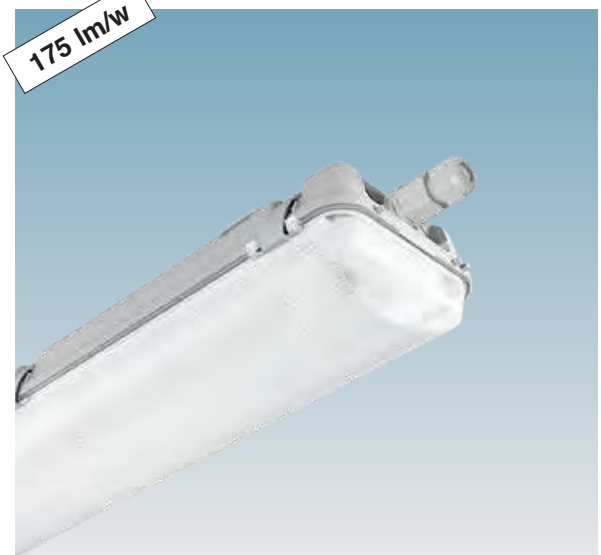

IP66 IK10

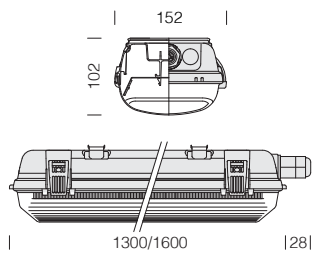

LED: power factor: ≥0,9.
Luminous flux maintenance 90%: 80.000h (L90B10).
Version with **wide beam reflector**, ideal in environments with low ceiling heights (eg indoor car parks).

958 Echo PARKING - twin LED module

		CLD			CLD D-D (DALI)	CLD EC		LUMEN OUTPUT (tq= 25 °C)
LED	colour	weight	L	codice	code	code	W tot	K - ølm - CRI
LED	grey	1.70	1300	164550-00	164550-0041	164550-0050	**28**	4000K - 5040lm - CRI 80
		2.20	1600	164551-00	164551-0041	164551-0050	**45**	4000K - 7875lm - CRI 80
		2.40		164552-00	164552-0041	164552-0050	**69**	4000K - 9450lm - CRI 80

Emergency wiring with centralized power supply: **sub-code -0050** (the ceiling lamps are supplied with a single power outlet capable of managing both standard power mode and emergency-EM mode).

Upon request with radar sensor for **ON-OFF fixtures: subcode -19** (remote control cod. **81418618** to be purchased separately; it **allows modification of the fixture parameters after installation**).

IP66 IK10

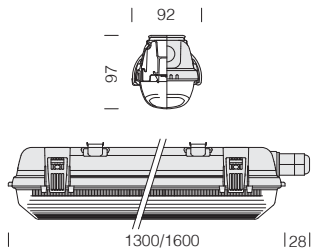

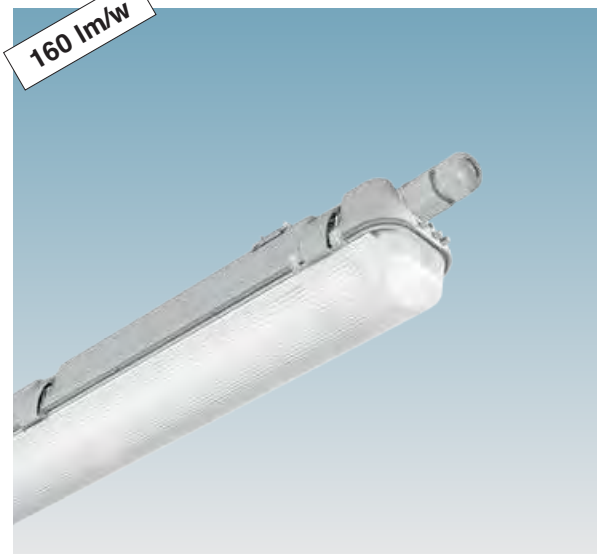

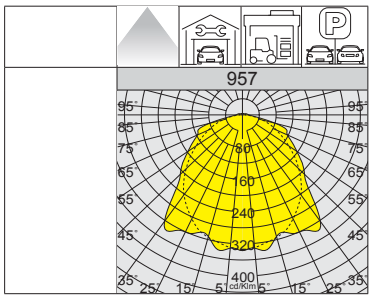

L90 B10 80.000h

RG0

+40 C° -30

EM S.A.

-0050 EM-EC

NO

LOW FLICKER

LED: power factor: ≥0,9. Luminous flux maintenance 90%: 80.000h (L90B10).

957 Echo - single LED module

		CLD			CLD E	CLD EC		LUMEN OUTPUT (tq= 25 °C)
LED	colour	weight	L	code	code	code	W tot	K - ølm - CRI
LED	grey	1.50	1300	164711-00	164711-07	164711-0050	**22**	4000K - 3350lm - CRI>80
		1.70	1600	164712-00	164712-07	164712-0050	**28**	4000K - 4468lm - CRI>80

Emergency wiring with centralized power supply: **sub-code -0050** (the ceiling lamps are supplied with a single power outlet capable of managing both standard power mode and emergency-EM mode).

Upon request with radar sensor for **ON-OFF fixtures: subcode -19** (remote control cod. **81418618** to be purchased separately; it **allows modification of the fixture parameters after installation**).

IP66 IK10

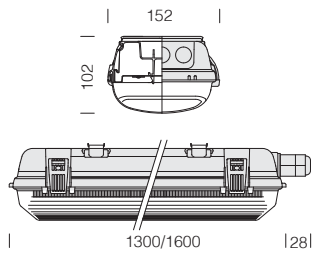

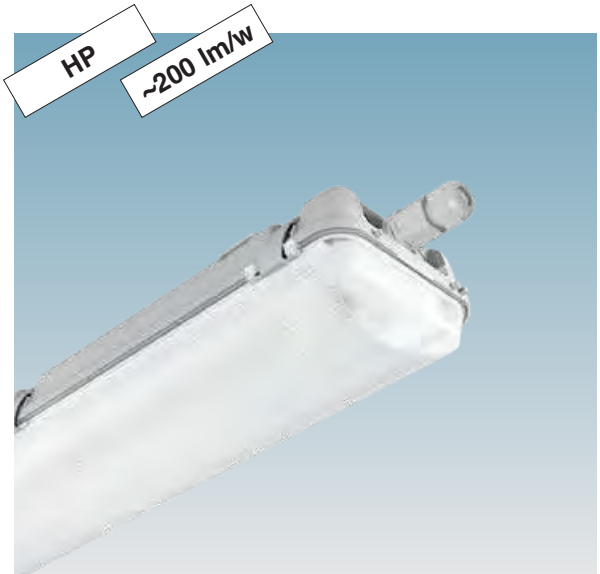

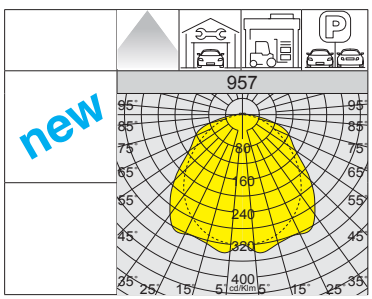

L90 B10 80.000h

RG0

+40 C° -30

DIMM DIG

EM S.A.

-0050 EM-EC

NO

LOW FLICKER

LED: power factor: ≥0,9. Luminous flux maintenance 90%: 80.000h (L90B10).

957 Echo HP - HIGH PERFORMANCE - twin LED module

		CLD			CLD D-D (DALI)		LUMEN OUTPUT (tq= 25 °C)
LED	colour	weight	L	code	code	W tot	K - ølm - CRI
LED	grey	2.30	1300	164714-00	164714-0041	**37**	4000K - 7135lm - CRI>80
		2.90	1600	164715-00	164715-0041	**47**	4000K - 9466lm - CRI>80
				164717-00	164717-0041	**67**	4000K - **12700lm** - CRI>80
				164718-00	164718-0041	**84**	4000K - **15500lm** - CRI>80

957 Echo HP - EM - HIGH PERFORMANCE - twin LED module

		CLD E			CLD EC		LUMEN OUTPUT (tq= 25 °C)
LED	colour	weight	L	code	code	W tot	K - ølm - CRI
LED	grey	2.30	1300	164714-07	164714-0050	**37**	4000K - 7135lm - CRI>80
		2.90	1600	164715-07	164715-0050	**47**	4000K - 9466lm - CRI>80
				164717-07	164717-0050	**67**	4000K - **12700lm** - CRI>80
				164718-07	164718-0050	**84**	4000K - **15500lm** - CRI>80

Emergency wiring with centralized power supply: **sub-code -0050** (the ceiling lamps are supplied with a single power outlet capable of managing both standard power mode and emergency-EM mode).

Upon request with radar sensor for **ON-OFF fixtures: subcode -19** (remote control cod. **81418618** to be purchased separately; it **allows modification of the fixture parameters after installation**).

L90 B10 80.000h
RG0
+40 C° -30
DIMM DIG
EM S.A.
-0050 EM-EC
NO
LOW FLICKER

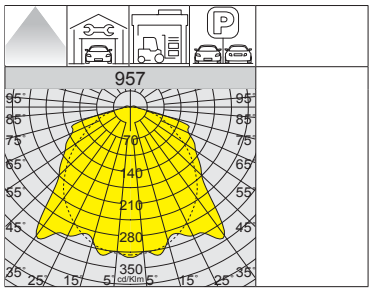

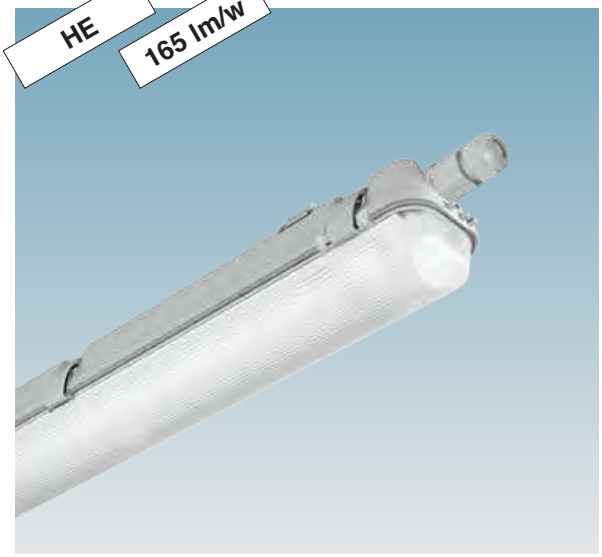

IP66 IK10

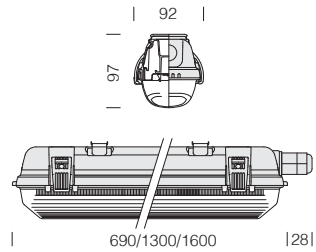

LED: power factor: ≥0,9.
Luminous flux maintenance 90%: 80.000h (L90B10).

957 Echo HE - HIGH EFFICIENCY - single LED module

		CLD			CLD D-D (DALI)		LUMEN OUTPUT (tq= 25 °C)
LED	colour	weight	L	code	code	W tot	K - ølm - CRI
LED	grey	0.80	690	164733-00		**11**	4000K - 1722lm - CRI>80
		1.60	1300	164737-00		**22**	4000K - 3623lm - CRI>80
		1.60	1300	164730-00	164730-0041	**39**	4000K - 6543lm - CRI>80
		1.90	1600	164736-00	164736-0041	**51**	4000K - 8343lm - CRI>80

957 Echo HE - EM - HIGH EFFICIENCY - single LED module

		CLD E			CLD EC		LUMEN OUTPUT (tq= 25 °C)
LED	colour	weight	L	code	code	W tot	K - ølm - CRI
LED	grey	0.80	690		164733-0050	**11**	4000K - 1722lm - CRI>80
		1.60	1300		164737-0050	**22**	4000K - 3623lm - CRI>80
		1.60	1300	164730-07	164730-0050	**39**	4000K - 6543lm - CRI>80
		1.90	1600	164736-07	164736-0050	**51**	4000K - 8343lm - CRI>80

Emergency wiring with centralized power supply: **sub-code -0050** (the ceiling lamps are supplied with a single power outlet capable of managing both standard power mode and emergency-EM mode).

L90 B10 80.000h
RG0
+40 C° -30
DIMM DIG
-0050 EM-EC
NO
LOW FLICKER

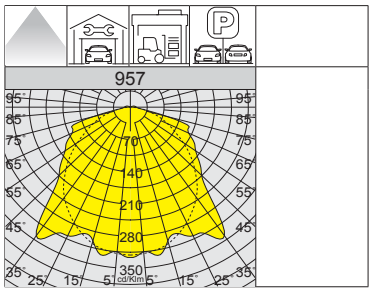

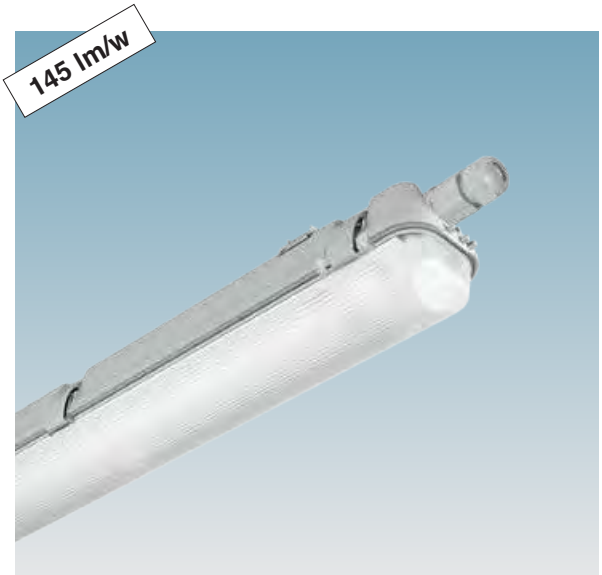

IP66 IK10

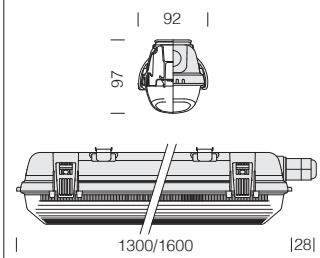

LED: power factor: ≥0,9.
Luminous flux maintenance 90%: 80.000h (L90B10).

957 Echo HE - single LED module

		CLD			CLD D-D (DALI)	CLD EC		LUMEN OUTPUT (tq= 25 °C)
LED	colour	weight	L	code	code	code	W tot	K - ølm - CRI
LED	grey	1.60	1300	164748-00	164748-0041	164748-0050	**34**	4000K - 4800lm - CRI>80
		1.90	1600	164749-00	164749-0041	164749-0050	**46**	4000K - 6600lm - CRI>80

Emergency wiring with centralized power supply: **sub-code -0050** (the ceiling lamps are supplied with a single power outlet capable of managing both standard power mode and emergency-EM mode).

Upon request with radar sensor for **ON-OFF fixtures: subcode -19** (remote control cod. **81418618** to be purchased separately; it **allows modification of the fixture parameters after installation**).

IP66 IK10

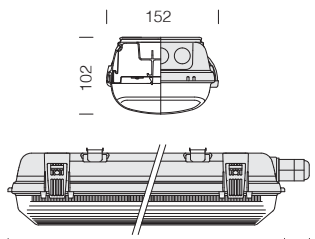

LED: power factor: ≥0,9.
Luminous flux maintenance 90%: 80.000h (L90B10).

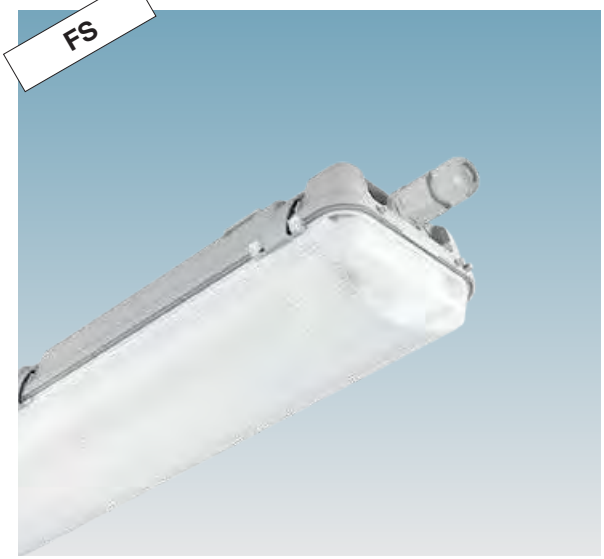

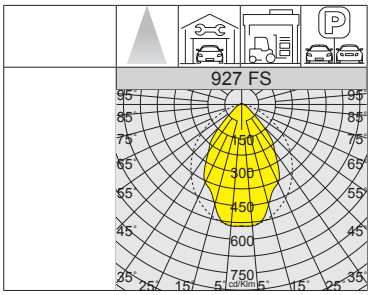

L90 B10 80.000h

RG0

+40 C° -30

NO

LOW FLICKER

927 Echo FS - narrow beam - twin LED module						
		CLD				LUMEN OUTPUT (tq= 25 °C)
LED	colour	weight	L	code	W tot	K - ølm - CRI
LED	grey	2.30	1300	164704-22	**32**	4000K - 5421lm - CRI>80
		2.70	1600	164705-22	**40**	4000K - 7121lm - CRI>80

Upon request (at an extra price): version with emergency wiring with **centralized power supply** avec **sub-code -0050** (the ceiling lamps are supplied with a single power outlet capable of managing both standard power mode and emergency-EM mode).

IP66 IK10

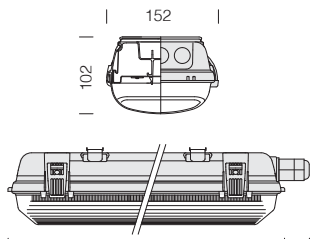

LED: power factor: ≥0,9.
Luminous flux maintenance 90%: 80.000h (L90B10).



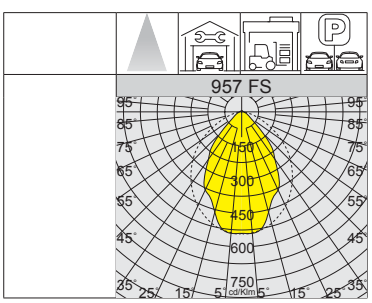

L90 B10 80.000h

RG0

+40 C° -30

NO

LOW FLICKER

957 Echo FS - narrow beam - twin LED module						
		CLD				LUMEN OUTPUT (tq= 25 °C)
LED	colour	weight	L	code	W tot	K - ølm - CRI
LED	grey	2.30	1300	164714-22	**37**	4000K - 6421lm - CRI>80
		2.70	1600	164715-22	**47**	4000K - 8519lm - CRI>80

Upon request (at an extra price): version with emergency wiring with **centralized power supply** avec **sub-code -0050** (the ceiling lamps are supplied with a single power outlet capable of managing both standard power mode and emergency-EM mode).

L90 B10 80.000h

RG0

+40 C° -30

NO

LOW FLICKER

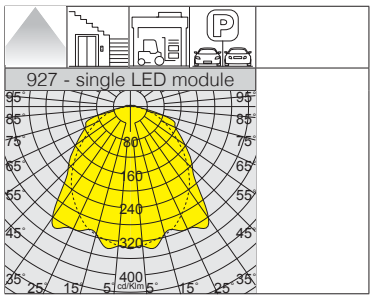

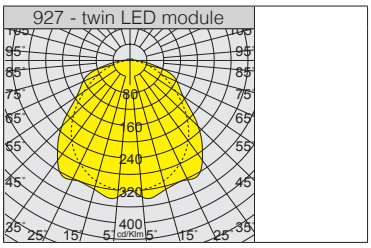

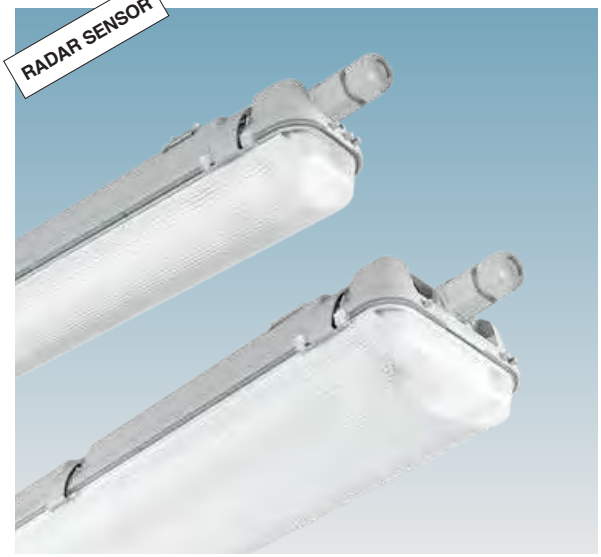

IP66IK10

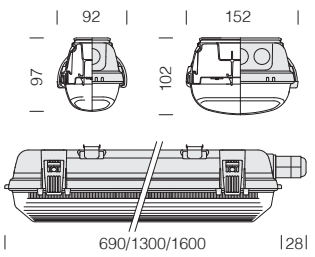

LED: power factor: ≥0,9.
Luminous flux maintenance 90%: 80.000h (L90B10).

927 Echo - single LED module - RADAR SENSOR						
		CLD radar sensor				LUMEN OUTPUT (tq= 25 °C)
LED	colour	weight	L	code	W tot	K - ølm - CRI
LED	grey	1.60	1300	164701-19	**19**	4000K - 2870lm - CRI>80
		1.80	1600	164702-19	**24**	4000K - 3830lm - CRI>80

927 Echo - twin LED module - RADAR SENSOR						
		CLD radar sensor				LUMEN OUTPUT (tq= 25 °C)
LED	colour	weight	L	code	W tot	K - ølm - CRI
LED	grey	1.40	690	164703-19	**21**	4000K - 3355lm - CRI>80
		2.30	1300	164704-19	**32**	4000K - 6024lm - CRI>80
		2.70	1600	164705-19	**40**	4000K - 7913lm - CRI>80

RADAR SENSOR (sub-code -19) - FEATURES AND FUNCTIONS

RADAR SENSOR - TECHNICAL SPECIFICATIONS	
Detection area	25% / 50% / 75% / 100% (100% default)
Detection distance	adjustable: Ø4-10 m
Hold time	5s / 30s / 1min / 3min / 5min / 10min / 20min / 30min (1min default)
Ambient light	2lux / 10lux / 30lux /50lux / 80lux / 120lux / Disable (Disable default)
Power consumption	≤ 0,5 W
Frequency	5.8GHz / <0.3mW

Upon request Built-in RADAR SENSOR with sub-code -19 (remote control cod. **81418618** to be purchased separately; it **allows modification of the fixture parameters after installation**): an electronic device that immediately detects any presence entering its range. When the sensor reads motion inside its range, lights will stay on. When it no longer senses motion and based on the lighting level in its range, the sensor will turn off the lights after a pre-programmed time.

EXAMPLE OPERATION

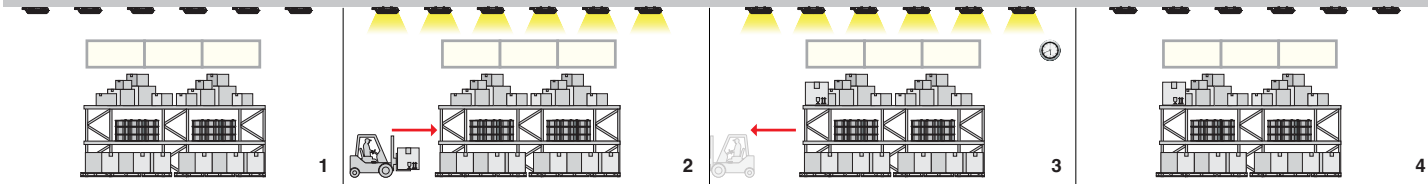

1 Lights stay off when no motion is detected.

2 As soon as the sensor detects motion, the sensor will turn on the light.

3 Lights will stay on for a previously set hold time.

4 When motion is no longer detected (based on the lighting level in its range) and the hold time has elapsed, the sensor will turn the lights off.



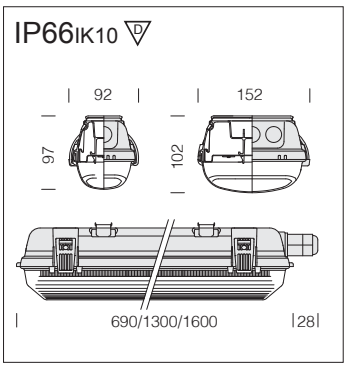

LED: power factor: ≥0,9.
Luminous flux maintenance 90%: 80.000h (L90B10).



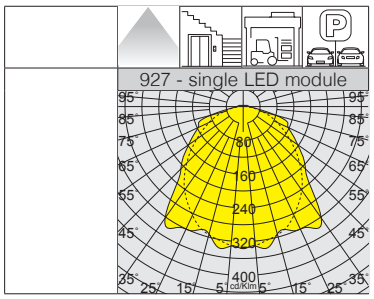

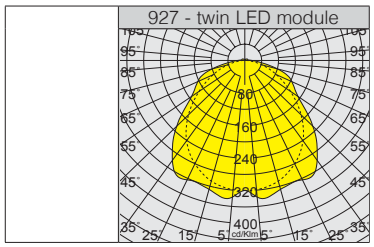

L90 B10 80.000h

RG0

WATER-PROOF

+40 C° -30

NO

LOW FLICKER

927 Echo - single LED module - RADAR SENSOR stepDIM

		CLD radar sensor (stepDIM)				LUMEN OUTPUT (tq= 25 °C)
LED	colour	weight	L	code	W tot	K - ølm - CRI
LED	grey	1.60	1300	164701-18	**19**	4000K - 2870lm - CRI>80
		1.80	1600	164702-18	**24**	4000K - 3830lm - CRI>80

927 Echo - twin LED module - RADAR SENSOR stepDIM

		CLD radar sensor (stepDIM)				LUMEN OUTPUT (tq= 25 °C)
LED	colour	weight	L	code	W tot	K - ølm - CRI
LED	grey	1.40	690	164703-18	**21**	4000K - 3355lm - CRI>80
		2.30	1300	164704-18	**32**	4000K - 6024lm - CRI>80
		2.70	1600	164705-18	**40**	4000K - 7913lm - CRI>80

stepDIM RADAR SENSOR (sub-code -18) - FEATURES AND FUNCTIONS

Built-in stepDIM RADAR SENSOR (sub-code -18): an electronic device that immediately detects any presence entering its range. When the sensor reads motion inside its range, lights will stay on. When it no longer senses motion and based on the lighting level in its range the sensor will either dim lights after a standby time according to the defined step or turn them off after a pre-programmed time.

stepDIM RADAR SENSOR - TECHNICAL SPECIFICATIONS			
Frequency	5,8GHz CW Radar, band - 0,2 mW	**Mounting height**	ceiling: 6 m
		Energy consumption	<0,5 W
Detection area	ceiling/wall: 150°	**Hold time (adjustable)**	min: 5sec (default) max: 600sec
Detection area sensitivity	min: 100% (default) max: 50%	**Ambient light (adjustable)**	30 lux (default) disable
Detection distance (adjustable)	ceiling: Ø 14 m - h: 3 m	**Stand-by dimming (adjustable)**	min: 10% (default) max: 30%
Detection motion speed	0,5-1-1,5 m/s	**Second-order delay (adjustable)**	min: ∞ (default) max: 10min

EXAMPLE OF SAFETY MODE OPERATION (PRE-SET LIGHTING LEVEL)

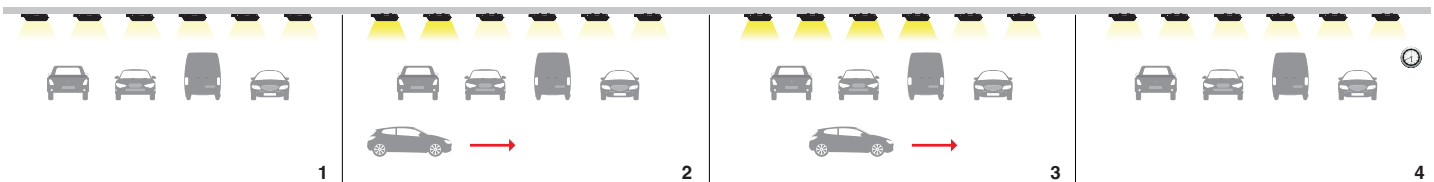

1 Lights stay on at a pre-programmed level (10% or 30%) when no motion is detected.

2 As soon as the sensor detects motion, it will change the lights to their full brightness (100%).

3 Lights will stay on at their full brightness for a previously set hold time (5sec/60sec/3min/5min).

4 When motion is no longer detected and the hold time has elapsed, the sensor will dim the lights to the previously set brightness (10% or 30%).

EXAMPLE OF ENERGY-SAVING MODE OPERATION (LIGHTING LEVEL OFF)

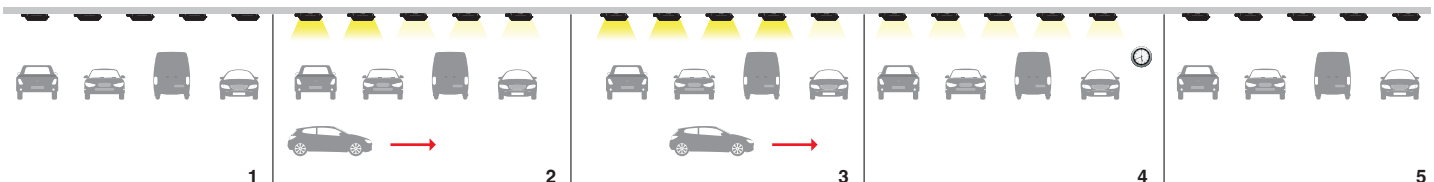

1 Lights stay off when no motion is detected.

2 As soon as the sensor detects motion, it will change the lights to their full brightness (100%).

3 Lights will stay on at their full brightness for a previously set hold time (5sec/60sec/3min/5min).

4 When motion is no longer detected and the hold time has elapsed, the sensor will dim the lights to the previously set brightness (10% or 30).

5 The sensor will turn the lights off after 10 minutes.








IP66 IK10

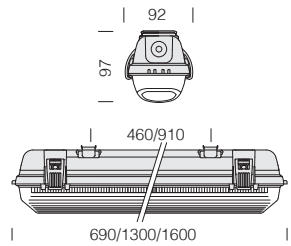

As standard, it comes with lamp holder with G13 connector; it can be installed directly of LED lamp (230Vac).

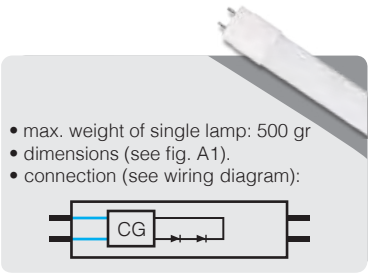

- max. weight of single lamp: 500 gr
- dimensions (see fig. A1).
- connection (see wiring diagram):

L (mm)	A1
A1 = 590mm	
A1 = 1200mm	
A1 = 1500mm	

921 Echo - LED 1X

		CLD S			
LED	colour	weight	L	code	W max
LED	grey	0.90	690	164530-03	**10**
		1.60	1300	164531-03	**16**
		1.80	1600	164532-03	**24**








IP66 IK10

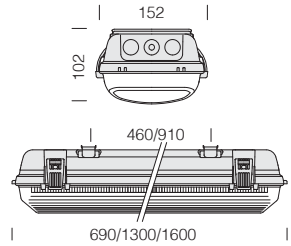

As standard, it comes with lamp holder with G13 connector; it can be installed directly of LED lamp (230Vac).

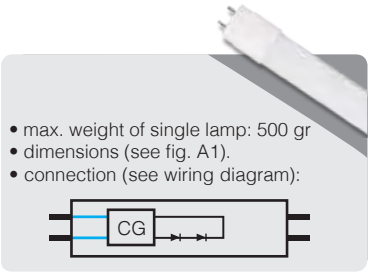

- max. weight of single lamp: 500 gr
- dimensions (see fig. A1).
- connection (see wiring diagram):

L (mm)	A1
A1 = 590mm	
A1 = 1200mm	
A1 = 1500mm	

921 Echo - LED 2X

		CLD S			
LED	colour	weight	L	code	W max
LED	grey	1.30	690	164533-03	**2x10**
		2.30	1300	164534-03	**2x16**
		2.70	1600	164535-03	**2x24**

GENERAL CHARACTERISTICS

Housing: injection moulded, in grey colour.

Diffuser: injection moulded, in V2 self-extinguishing polycarbonate, UV stabilized, clear polycarbonate. The external smooth finish facilitates cleaning, essential to maintain maximum lighting efficiency.

Equipment: steel brackets to mount the product as a ceiling fixture or a suspended lamp and with cable gland, equipped with lamp holder with G13 connector and 2 LED tubes.

For applications with direct exposure to sunlight, we recommend using Forma LED. Check the compatibility between the material constituting the product and the space where it will be installed.



IP65IK07

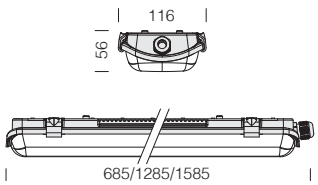

LED: luminous flux maintenance 70% 25.000h (L70B50).
Glass tube with G13 connector.

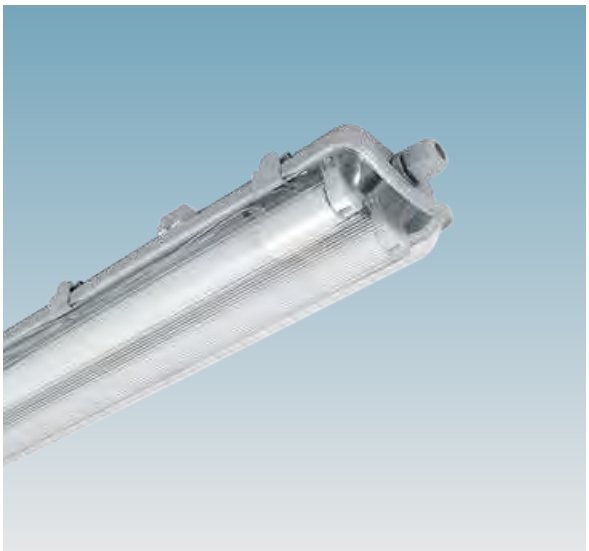



L70 B50 25.000h

RG0

+30 C° -20

NO

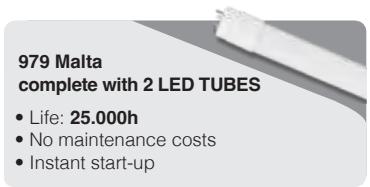

979 Malta
complete with 2 LED TUBES

- Life: **25.000h**
- No maintenance costs
- Instant start-up

979 Malta - with LED TUBES

		CLD				LUMEN OUTPUT (tq= 25 °C)
LED	colour	weight	L	code	W tot	K - ølm - CRI
LED	grey	0.80	685	164800-00	**2x7**	4000K - 1350lm - CRI 80
		1.60	1285	164801-00	**2x13**	4000K - 2700lm - CRI 80
		1.80	1585	164802-00	**2x18**	4000K - 3500lm - CRI 80

GENERAL CHARACTERISTICS

Housing/diffuser: extruded self-extinguishing V2 polycarbonate with smooth and dust resistant opaque outer surface.

End caps: grey injection moulded self-extinguishing V2 polycarbonate.

Equipment: complete with fairlead, stainless steel brackets for mounting the fixture on ceilings or as a pendant.

Material compatible with food industry environments. Mounting is also possible at low or very low temperatures (instant start and no flux decay).

For applications with direct exposure to sunlight, we recommend using Forma LED. Check the compatibility between the material constituting the product and the space where it will be installed.

LED: power factor: ≥0,95.
Luminous flux maintenance 90%: 80.000h (L90B10).
Photobiological safety class: exempt group.
Allowable ambient temperature : -20°C to + 40°C (excluding emergency versions).

LOW FLICKER Product with a low flicker; uniform light for greater eye protection.

OTHER CHARACTERISTICS

Greater performance
The fixture is made with first-choice polycarbonate stabilised against UV light. It has been treated to eliminate glare without affecting performance. Polycarbonate with excellent diffusion coefficient and lighting transmission.



Standard stainless steel mounting bracket enables quick and easy installation of the fixture to ceiling surfaces.

Standard spring loop allows quick connection to any chain suspension system.

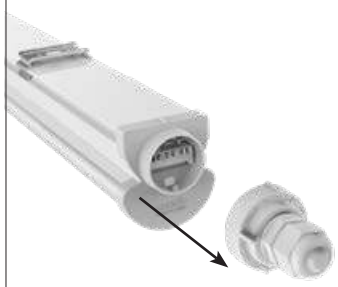

Equipped with quarter-turn system for easy electrical connection. Pull-out terminal with quick cable connector

OTHER INFORMATION



Self-extinguishing
U.L.94 is a widely accepted USA flammability standard that classifies plastics according to how they burn. The housing of **DORNO** fixture is made of **V2** self-extinguishing plastic material: burning stops within **25 seconds**.

Glow wire test
Glow wire tested at 850°C.

ALL LIGHT: no glare. The special surface finish of the diffuser allows light to escape, creating an "all light" effect.



UPON REQUEST

Possibility of centralized lighting point control or via **external** presence/lighting sensors (see chapter *Lighting management systems and recommendations*).

-0050 EM-EC Version **CLD EC** wiring with **subcode -0050:** permanently mounted fixture, operating in AC/DC mode, with centralized emergency device, not incorporated into the fixture.

ACCESSORIES AND INSTALLATION



acc. 978 wall bracket	
galvanized	998078-00
Made of galvanized steel. For installation of Dorno LED fixtures on walls. Bag containing 2 pieces.	



acc. 6036 universal conn.	
galvanised	132987-00
Made of galvanized steel. To install non-corrosive fixtures on track art. 6000. Bag containing 2 pieces.	

Continuous row installation with cable and special lighting fitting

For the installation in continuous row, order the special body with subcode **-0072**. Extra price.
Note: the last fixture of the row must b e of the standard type.

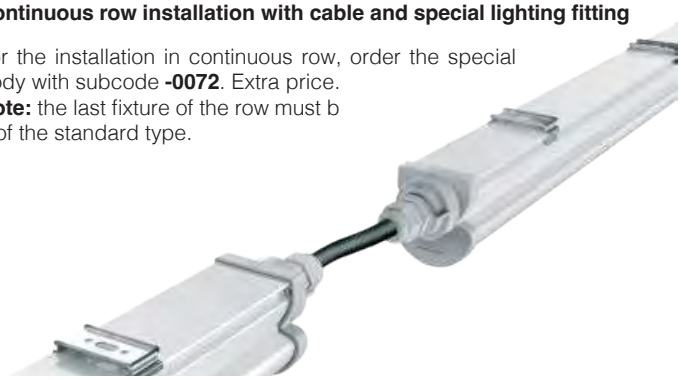

TWO-MODULE VERSION

Dorno in the 2385/2915mm two-module version is used to create continuous and uninterrupted light lines.





IP66IK08

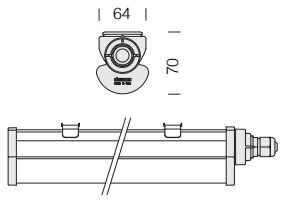



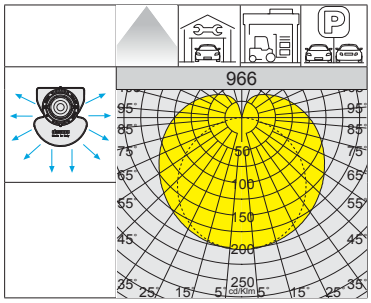

L90 B10 80.000h

RG0

+40 C° -20

DIMM DIG

EM S.A.

NO

966 Dorno								
		CLD			CLD E	CLD D-D (DALI)		LUMEN OUTPUT (tq= 25 °C)
LED	colour	weight	L	code	code	code	W tot	K - ølm - CRI
LED	grey	0.60	650	164813-00	164813-07	164813-0041	**19**	4000K - 2450lm - CRI>80
		0.80	1200	164814-00	164814-07	164814-0041	**42**	4000K - 5100lm - CRI>80
		1.00	1465	164815-00	164815-07	164815-0041	**56**	4000K - 6900lm - CRI>80
		1.60	2385	164816-00	164816-07	164816-0041	**84**	4000K - 10200lm - CRI>80
		1.90	2915	164817-00	164817-07	164817-0041	**112**	4000K - 13800lm - CRI>80

Upon request (at an extra price): version with emergency wiring with **centralized power supply** avec **sub-code -0050** (the ceiling lamps are supplied with a single power outlet capable of managing both standard power mode and emergency-EM mode).

CONNECTION TO THE QUICK CONNECTOR

The ceiling fixture comes with a quick connector to connect the unit to the electrical box **easily** and **safely** in **just a few seconds** and **without opening the unit**.

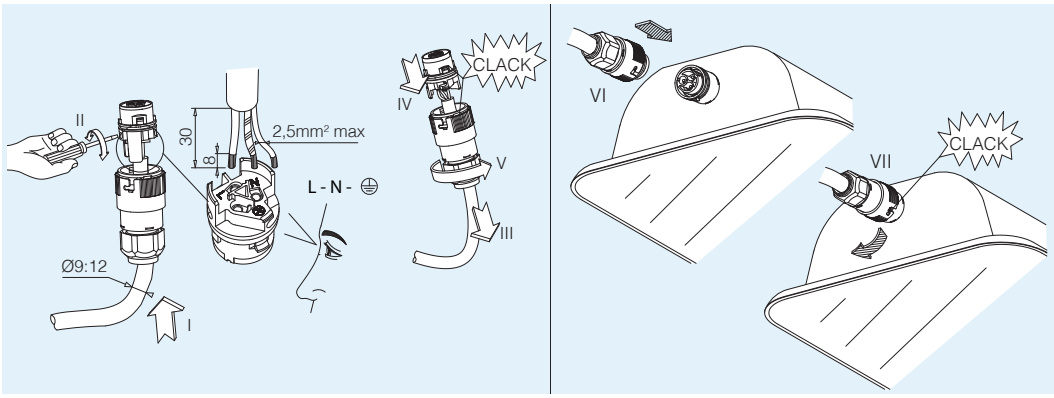

ACCESSORIES AND INSTALLATION

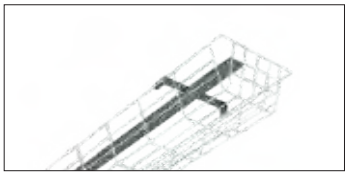

acc. 975 protection guard	
1400mm	165566-00
1700mm	165567-00
White plastic-coated steel rod. To be installed directly on the ceiling.	

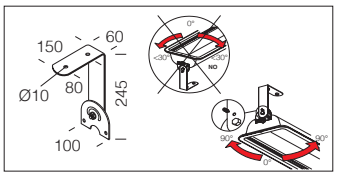

Forma complete with **adjustable bracket** (to purchase with sub-code -0074). N.B. installation of fixtures providing indirect light with flat glass is not recommended for exterior application.

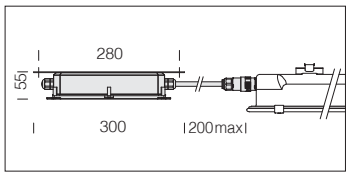

Forma with subcode -07: as standard, the fixures comes with an EMergency external watertight box.

GENERAL CHARACTERISTICS

Housing: made of pressed steel, drawn in a single piece for high mechanical resistance.

Diffusore: art. 988-993-995-976-977 in tempered glass, 5 mm thick, resistant to thermal shock and impact (UNI EN 12150-1:2001); art. 983-997 in injection moulded, in V2 self-extinguishing, UV stabilized, clear polycarbonate. **Ideal for the food industry.**

Coating: the fully automated powder-coating cycle involves a polyester-based, salt-spray corrosion-resistant and UV-stabilised paint.

Standard supply: complete with silicone rubber gasket, waterproof connector for quick installation and locking system with spring clips; **stainless steel bracket** that allows easy and safe installation of the lighting fixture onto the ceiling/wall and **spring loop** that allows quick connection to any suspension system.

LED: power factor: ≥0,9.
Luminous flux maintenance 90%: 80.000h (L90B10).
Photobiological safety class: Exempt group.
Colour temperature: upon request 3000K and 6000K.

We recommend using this version for applications with direct exposure to sunlight.

L90 B10 80.000h

RG0

U.V.

+55 C° -40

LOW FLICKER

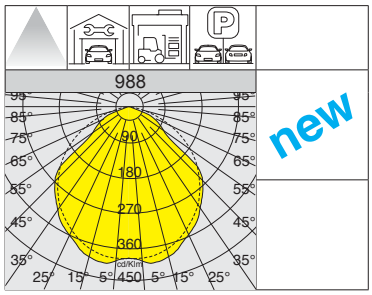

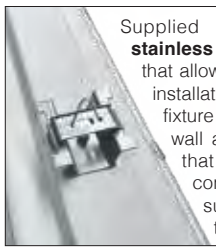

Supplied as standard: **stainless steel bracket** that allows easy and safe installation of the lighting fixture onto the ceiling/wall and **spring loop** that allows quick connection to any suspension system.



IP66 IK10

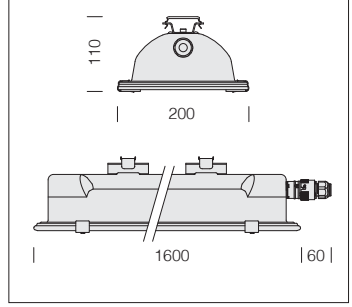

Diffuser: impact-resistant transparent tempered glass.

HT version ideal for environments where temperatures reach max **+55 °C**.

988 Forma HT - HIGH TEMPERATURE - with transparent glass						
		CLD				LUMEN OUTPUT (tq= 25 °C)
LED	colour	weight	L	code	W tot	K - ølm - CRI
LED	grey	9.20	1600	162485-00	**55**	4000K - **9120lm** - CRI>80
				162486-00	**67**	4000K - **11110lm** - CRI>80
Version complete with adjustable bracket (to purchase with sub-code -0074).						

IP66 IK10

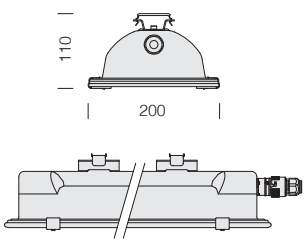

Diffuser: impact-resistant transparent tempered glass.



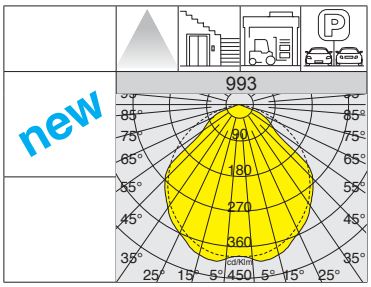

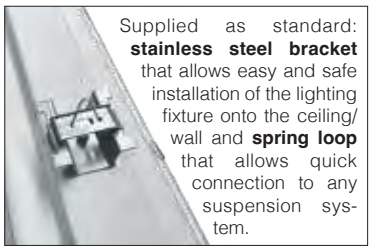

Supplied as standard: **stainless steel bracket** that allows easy and safe installation of the lighting fixture onto the ceiling/ wall and **spring loop** that allows quick connection to any suspension system.

993 Forma - with transparent glass

		CLD				LUMEN OUTPUT (tq= 25 °C)
LED	colour	weight	L	code	W tot	K - ølm - CRI
LED	grey	7.60	1300	162457-00	**32**	4000K - 5067lm - CRI>80
				162447-00	**37**	4000K - 6000lm - CRI>80
LED	grey	9.00	1600	162448-00	**47**	4000K - 8003lm - CRI>80
				162458-00	**67**	4000K - **11650lm** - CRI>80

Version complete with adjustable bracket (to purchase with sub-code -0074).
Upon request: Forma with emergency wiring with centralized power supply (**sub-code -0050)** ideal for **reducing maintenance and installation costs**.

IP66 IK10

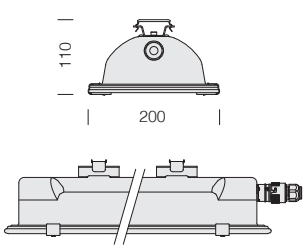

Diffuser: impact-resistant and etched tempered glass.



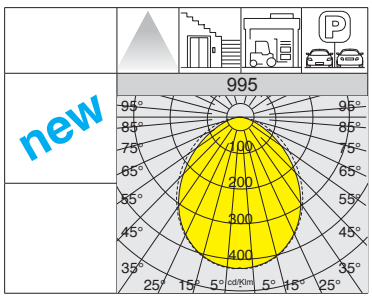

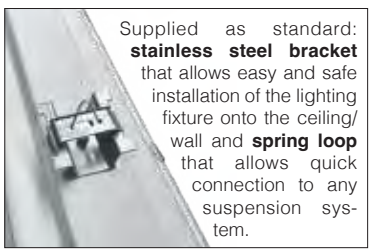

Supplied as standard: **stainless steel bracket** that allows easy and safe installation of the lighting fixture onto the ceiling/ wall and **spring loop** that allows quick connection to any suspension system.

995 Forma - with etched glass

		CLD				LUMEN OUTPUT (tq= 25 °C)
LED	colour	weight	L	code	W tot	K - ølm - CRI
LED	grey	7.60	1300	162455-00	**32**	4000K - 4712lm - CRI>80
				162445-00	**37**	4000K - 5580lm - CRI>80
LED	grey	9.00	1600	162446-00	**47**	4000K - 7443lm - CRI>80
				162456-00	**67**	4000K - **10899lm** - CRI>80

Version complete with adjustable bracket (to purchase with sub-code -0074).
Upon request: Forma with emergency wiring with centralized power supply (**sub-code -0050)** ideal for **reducing maintenance and installation costs**.

L90 B10 80.000h
RG0
U.V.
+40 C° -25
-0050 EM-EC
LOW FLICKER

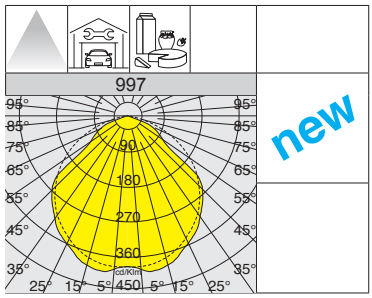

new

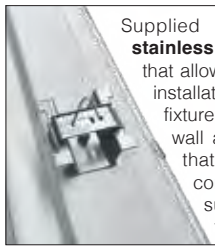

Supplied as standard: **stainless steel bracket** that allows easy and safe installation of the lighting fixture onto the ceiling/ wall and **spring loop** that allows quick connection to any suspension system.

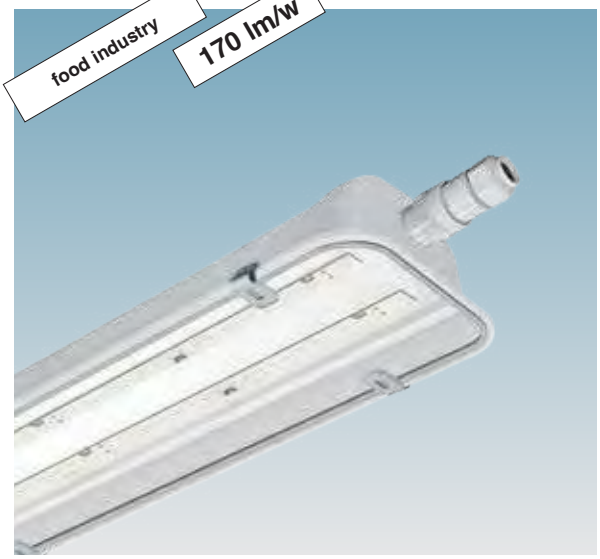

IP66 IK10

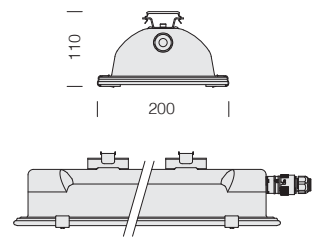

Diffuser: Injection moulded, in V2 self-extinguishing, UV stabilized, clear polycarbonate, **ideal for the food industry.**

Upon request: version with diffuser in special polycarbonate material, ideal for the food industry with special processing methods.

997 Forma - with polycarbonate diffuser

		CLD				LUMEN OUTPUT (tq= 25 °C)
LED	colour	weight	L	code	W tot	K - ølm - CRI
LED	grey	6.00	1300	162400-00	**32**	4000K - 5158lm - CRI>80
				162401-00	**37**	4000K - 5939lm - CRI>80
LED	grey	7.70	1600	162402-00	**47**	4000K - 7924lm - CRI>80
				162403-00	**67**	4000K - **11520lm** - CRI>80

Version complete with adjustable bracket (to purchase with sub-code -0074).
Upon request: Forma with emergency wiring with centralized power supply (**sub-code -0050)** ideal for **reducing maintenance and installation costs**.

L90 B10 80.000h
RG0
U.V.
+40 C° -25
-0050 EM-EC
LOW FLICKER

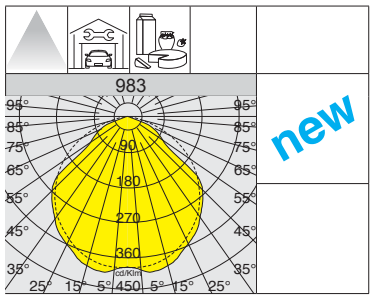

new

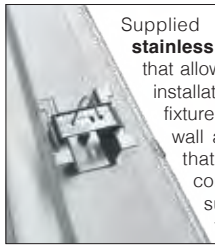

Supplied as standard: **stainless steel bracket** that allows easy and safe installation of the lighting fixture onto the ceiling/ wall and **spring loop** that allows quick connection to any suspension system.

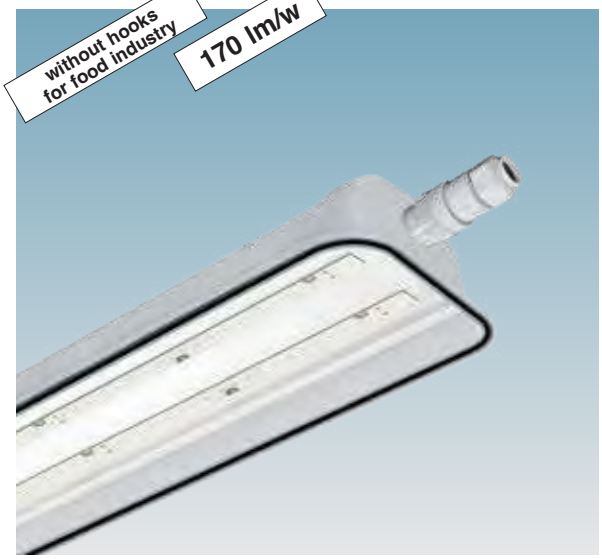

IP66 IK10

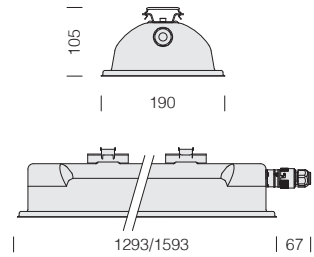

Diffuser: Injection moulded, in V2 self-extinguishing, UV stabilized, clear polycarbonate. **Ideal for the food industry.**

983 Forma - without hooks - with polycarbonate diffuser

		CLD				LUMEN OUTPUT (tq= 25 °C)
LED	colour	weight	L	code	W tot	K - ølm - CRI
LED	grey	6.00	1293	162465-00	**32**	4000K - 5158lm - CRI>80
				162466-00	**37**	4000K - 5939lm - CRI>80
LED	grey	7.70	1593	162467-00	**47**	4000K - 7924lm - CRI>80
				162468-00	**67**	4000K - **11520lm** - CRI>80

Version complete with adjustable bracket (to purchase with sub-code -0074).
Upon request: Forma with emergency wiring with centralized power supply (**sub-code -0050)** ideal for **reducing maintenance and installation costs**.

IP66 IK10

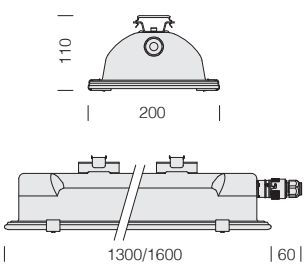

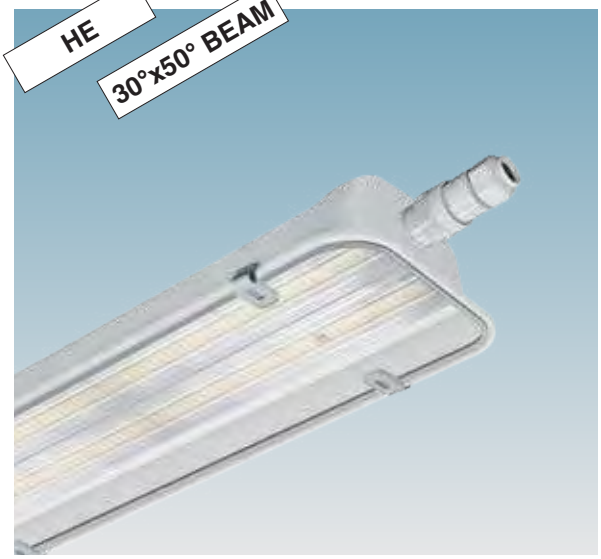

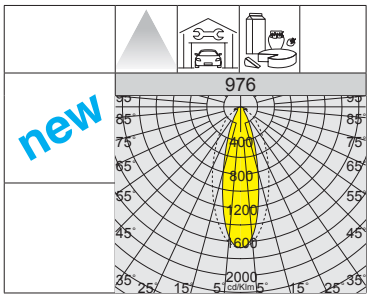

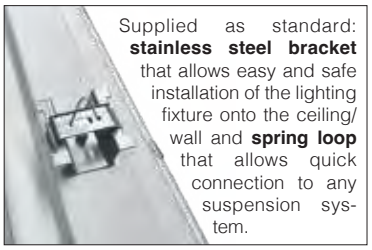

Diffuser: impact-resistant transparent tempered glass.

Optics: high-efficiency lenses in polycarbonate for luminous flux control, capable of withstanding high temperatures and UV rays.

976 Forma HE - HIGH EFFICIENCY - 30°x50° elliptic - with transparent glass

		CLD				LUMEN OUTPUT (tq= 25 °C)
LED	colour	weight	L	code	W tot	K - ølm - CRI
LED	grey	7.30	1300	162430-00	**36**	4000K - **6280lm** - CRI>80
				162432-00	**72**	4000K - **12660lm** - CRI>80
LED	grey	9.00	1600	162431-00	**45**	4000K - **7850lm** - CRI>80
				162433-00	**90**	4000K - **15450lm** - CRI>80

Version complete with adjustable bracket (to purchase with sub-code -0074).
Upon request: Forma with emergency wiring with centralized power supply (**sub-code -0050)** ideal for **reducing maintenance and installation costs**.

IP66 IK10

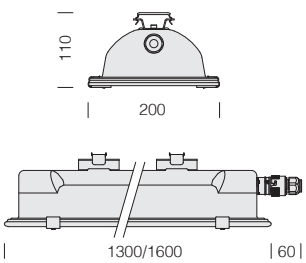

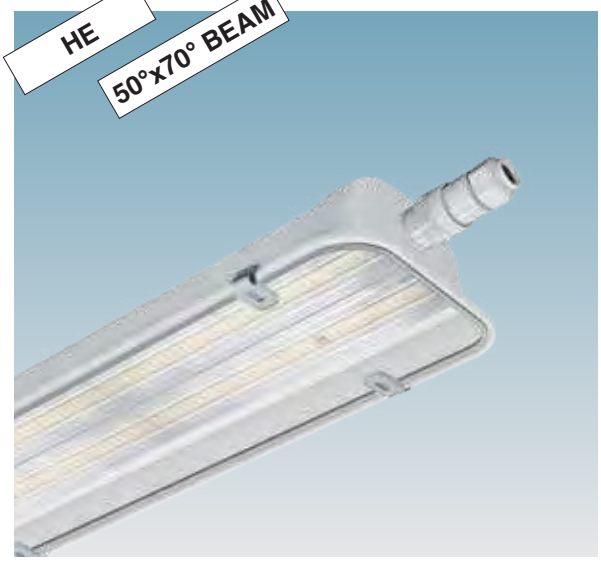

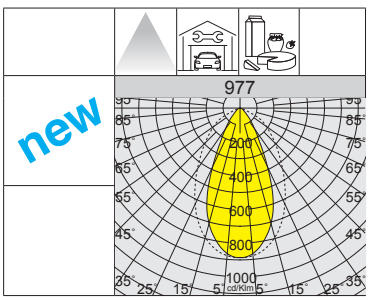

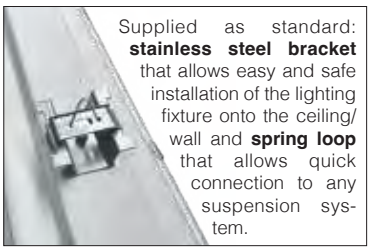

Diffuser: impact-resistant transparent tempered glass.

Optics: high-efficiency lenses in polycarbonate for luminous flux control, capable of withstanding high temperatures and UV rays.

977 Forma HE - HIGH EFFICIENCY - 50°x70° elliptic - with transparent glass

		CLD				LUMEN OUTPUT (tq= 25 °C)
LED	colour	weight	L	code	W tot	K - ølm - CRI
LED	grey	7.30	1300	162470-00	**36**	4000K - **6770lm** - CRI>80
				162472-00	**72**	4000K - **13450lm** - CRI>80
LED	grey	9.00	1600	162471-00	**45**	4000K - **8500lm** - CRI>80
				162473-00	**90**	4000K - **16860lm** - CRI>80

Version complete with adjustable bracket (to purchase with sub-code -0074).
Upon request: Forma with emergency wiring with centralized power supply (**sub-code -0050)** ideal for **reducing maintenance and installation costs**.

DIRECTIVE 94/9/CE (ATEX= ATMOSPHERE EXPLOSIVE) OF THE EUROPEAN PARLIAMENT AND COUNCIL (MARCH 23, 1994): IMPACT ON LIGHTING FIXTURES

APPLICATION: can be installed outdoors or indoors, in industrial areas, cantilever roofs, environments at risk of fire, and in any other premise compatibly with the fumes and atmospheric or chemical agents which affect the use of plastic materials: check compatibility with corrosive agents.

APPLICATION OF RELEVANT REGULATION:

• Directive 94/9/CE (ATEX) was enforced and made compulsory on 30 June 2003. Back in January 1998 the CEI 64-2 regulation was replaced for the classification of hazardous areas and for the construction of electrical equipment suitable for potentially explosive atmospheres containing GAS (C1 and C3 environments).

• The directive applies to electrical and non-electrical products used in explosive atmospheres. The following are excluded from this directive:
- medical equipment used in medical environments;
- protection equipment and systems, when the risk of explosion is exclusively due to the presence of explosive substances;
- equipment suitable for domestic use, not suitable for commercial areas where the atmosphere is rarely explosive and can only become so in case of a gas leak;
- individual safety devices, as per directive 89/689/CEE;
- sea-going ships and mobile offshore units;
- means of transport (vehicles and related trailers); however, vehicles used in potentially explosive areas are not excluded;
- weapons, ammunition and war material.

• Equipment suitable for AD/FT systems became obsolete in July 2003. Therefore, this identification will be deleted from new classification and construction regulations for explosion-prone environments.

• The new classification of explosion-prone areas identifies hazardous environments where the atmosphere contains gas substances (vapours or mists) with ZONE 0, ZONE 1, ZONE 2. Hazardous environments containing explosive substances and combustible powders are referred to as ZONE 20, ZONE 21, ZONE 22.

ZONA 0 = an area where the atmosphere is constantly filled with explosive gas over long periods of time.

ZONE 1 = an area where lighting fixtures can operate in an explosive gas-filled atmosphere.

ZONE 2 = an area where an explosive gas-filled atmosphere is not allowed when a lighting fixture is operating normaly. An explosion-prone atmosphere is a rare occurrence and only lasts for a very short period of time.

ZONE 20 = an area where the atmosphere is filled with combustible powders either permanently or over long periods of time, or frequently.

ZONE 21 = an area where the atmosphere occasionally contains combustible powders when the lighting fixture is operating normally.

ZONE 22 = an area where the atmosphere is unlikely to be filled with combustible powders when the lighting fixture is operating normally. An explosion-prone atmosphere is a rare occurrence and only lasts for a very short period of time.

• a notified Organization should be in charge of prototype certification and product control, which are compulsory requirements for ZONE 0, 1, 20 and 21 as regards electrical equipment. In-house manufacturing checks and the creation of a technical file confirming product compliance (attachment II of 94/9/Ce) are required for ZONE 2 and 22, and should be guaranteed for the entire production line (attachment VIII of 94/9/Ce).

• zone 2 and 22 represent the largest areas as regards hazardous environments.

• "Former AD/FT" products can be installed in hazardous areas 2 and 22, provided basic safety requirements are complied with. Electrical systems used in zone 2 should be designed using the "n" protection system, according to regulation EC 60079-15, while the electrical systems developed for zone 22 should be designed according to regulations EN 60079-31

Equipment level protection (EPL)

ZONE	EPL
0	"Ga"
1	"Ga" o "Gb"
2	"Ga", "Gb" o "Gc"
20	"Da"
21	"Da" o "Db"
22	"Da", "Db" o "Dc"

Hazardous places according to Legislative Decree 233/03

Business	Places
chemical and petrochemical industry	gas-fuelled heating plants with P>35Kw
pharmaceutics industry	garages, repair shops, body shops
metal processing	fuel distribution
food industry (storage and processing of cereals, flour and sugar)	bread baking ovens
processing of wood	places where painting processes occur
fabric and spinning industry	distilleries, production of alcoholic beverages

ELECTRICAL SYSTEMS FOR AREAS CONTAINING EXPLOSIVE GAS:	
Ex =	Electrical system built and tested for utilization in an atmosphere filled with explosive gasses.
nA =	The electrical system does not produce sparks when operating normally.
II =	Electrical system suitable for areas with a potentially explosive atmosphere, different from mines, with firedamp.
Gc =	Enhanced protection level
T4 =	Maximum internal or external surface temperature; classification according to regulation cei en 60079-0 table 2
IP66 =	Housing entirely protected against dust and the water jets

ELECTRICAL SYSTEMS FOR AREAS CONTAINING EXPLOSIVE POWDERS:	
Ex =	Electrical system built and tested for utilization in an atmosphere containing powders.
IIIC	Electrical equipment for premises with potentially explosive atmospheres due to the presence of combustible dust, other than mines with the presence of firedamp
Dc	Enhanced protection level
tc	Protection against explosive atmospheres due to the presence of dust where the electrical equipment is equipped with an enclosure
22 =	Permitted hazardous area.
IP6X =	Housing entirely protected against dust
T 135°C =	Maximum temperature in a dust-free environment

SELECTION OF ELECTRICAL SYSTEMS IN RELATION TO HAZARDOUS AREAS

HAZARDOUS AREA	CLASSIFICATION	EPL	PROTECTIONS PERMITTED
ATMOSPHERE CONTAINING GAS	**0**	**Ga**	"ia" Intrinsic safety "ma" Encapsulation Two independent EPLs "Gb"
	1	**Gb**	"d" Explosion proof "e" Increased safety "ib" Intrinsic safety "m" "mb" Encapsulation "o" Oil immersion "p, px, py" Pressurisation "q" Powder filling Field bus intrinsically safe concept (FISCO) Optical radiation safety
	2	**Gc**	"ic" Intrinsic safety "mc" Encapsulation "n, nA" Non sparking "nR" Restricted breathing "nL" Energy limitation "nC" Sparking device and components "pz" Pressurisation Field bus non-incendive concept Optical radiation safety
ATMOSPHERE CONTAINING GAS	**20**	**Da**	"Da" "Id" Intrinsic safety "md" Encapsulation "tD" Protection by enclosure
	21	**Db**	"iD" Intrinsic safety "mD" Encapsulation "tD" Protection by enclosure "pD" Pressurisation
	22	**Dc**	"iD" Intrinsic safety "mD" Encapsulation "tD" Protection by enclosure "pD" Pressurisation

RELEVANT REGULATIONS: Directive 94/9/CE entrusts conformed European regulations with the task of setting out basic technical requirements to guarantee safety in explosion-prone areas, replacing contrasting national and European regulations belonging to the same sector.

IEC 60079-0	Electrical systems for potentially explosive atmospheres GENERAL REGULATIONS
IEC 60079-15	Electrical systems for potentially explosive atmospheres.PROTECTION METHOD "n"
IEC 60079-10-1	Explosive atmospheres Classification of hazardous locations. Explosive atmospheres due to the presence of gas
IEC 60079-14	Explosive atmospheres Design, selection and installation of electrical equipment
IEC 60079-10-2	Explosive atmospheres Classification of hazardous locations. Explosive atmospheres due to the presence of dust
IEC 60079-31	Explosive atmospheres Fixtures with protection by "t" enclosure for use in the presence of combustible dust
IEC 60079-28	Explosive atmospheres Protection of equipment and transmission systems using optical radiation

GENERAL CHARACTERISTICS

Housing: injection moulded, vandal resistant, UV stabilised RAL 7035 grey polycarbonate, high mechanical resistance thanks to the stiffening ribs inside the structure.

Diffuser: injection moulded V2 self-extinguishing , UV stabilised clear polycarbonate, prismatic inside for better light control. The smooth outside finishing facilitates cleaning, essential to ensure maximum lighting efficiency at all times.

Reflector: in galvanised steel, previously stove-enamelled with UV-stabilised polyester resin.

Equipment: cable gland.

LED: power factor: ≥0,9.
Luminous flux maintenance 90%: 80.000h (L90B10).
Photobiological safety class: exempt group.



927 ATEX		
Protection against explosions	II 3G Ex nA OP IS IIC T4 IP66 Gc	II 3D Ex tc IIIC T135°C IP66 Dc
Allowed dangerous area	Zone 2 / Zone 22	Zone 22
ATEX version	Art. 927 - 164797-00 / 164797-07 Art. 927 - 164798-00 / 164798-07	Art. 927 - 164796-00 / 164796-07 Art. 927 - 164799-00 / 164799-07
Reference regulations	EN 60079-15 = Zone 2 EN 60079-31 = Zone 22	EN 60079-31 = Zone 22
	EN 60079-0, EN 60079-28 = Zone 2 and Zone 22	
Allowed room temperature	+10°C ÷ +40°C	
Degree of protection	IP66	
Installation	ceiling - suspension	
Casing mechanical resistance	IK10	

IP66IK10

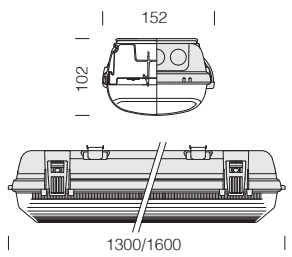



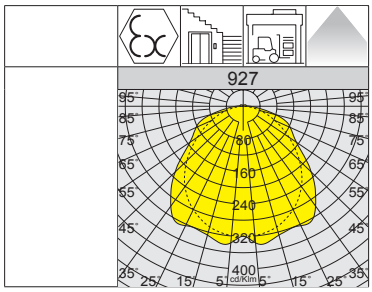

L90 B10 80.000h

RG0

+40 C° +10

EM S.A.

NO

LOW FLICKER

927 Echo ATEX - ZONE 2 / ZONE 22							
		CLD			CLD E		LUMEN OUTPUT (tq= 25 °C)
LED	colour	weight	L	code	code	W tot	K - ølm - CRI
LED	grey	2.60	1300	164797-00	164797-07	**45**	4000K - 6000lm - CRI>80
		3.00	1600	164798-00	164798-07	**65**	4000K - 9264lm - CRI>80

927 Echo ATEX - ZONE 22							
		CLD			CLD E		LUMEN OUTPUT (tq= 25 °C)
LED	colour	weight	L	code	code	W tot	K - ølm - CRI
LED	grey	2.60	1300	164796-00	164796-07	**45**	4000K - 6000lm - CRI>80
		3.00	1600	164799-00	164799-07	**65**	4000K - 9264lm - CRI>80



GENERAL CHARACTERISTICS

Housing: made of pressed steel, drawn in a single piece for high mechanical resistance.

Diffuser: in tempered glass, 4 mm thick, resistant to thermal shock and impact (UNI EN 12150-1:2001).

Coating: the fully automated powder-coating cycle involves a polyester-based, salt-spray corrosion-resistant and UV-stabilised paint.

Standard supply: complete with silicone rubber gasket, waterproof box and cable gland for quick installation and locking system with spring clips.

LED: power factor: ≥0,9.
Luminous flux maintenance 90%: 80.000h (L90B10).
Photobiological safety class: exempt group.

993 ATEX		
Protection against explosions	Ⓔx II 3G Ex nA OP IS IIC T4 IP66 Gc	Ⓔx II 3D Ex tc IIIC T135°C IP66 Dc
Allowed dangerous area	Zone 2 / Zone 22	Zone 22
ATEX version	Art. 993 - 162495-00 Art. 993 - 162496-00	Art. 993 - 162497-00 Art. 993 - 162498-00
Reference regulations	EN 60079-15 = Zone 2 EN 60079-31 = Zone 22	EN 60079-31 = Zone 22
	EN 60079-0, EN 60079-28 = Zone 2 and Zone 22	
Allowed room temperature	-20°C ÷ +40°C	
Degree of protection	IP66	
Installation	ceiling - suspension	
Casing mechanical resistance	IK10	

L90 B10 80.000h

RG0

U.V.

+40 C° -20

LOW FLICKER

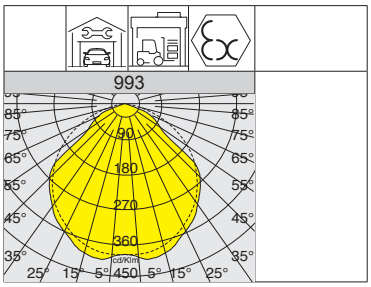

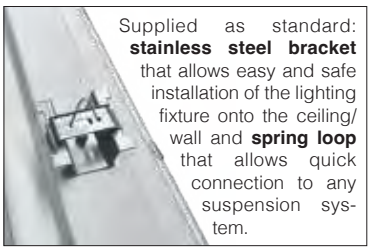

Supplied as standard: **stainless steel bracket** that allows easy and safe installation of the lighting fixture onto the ceiling/ wall and **spring loop** that allows quick connection to any suspension system.



IP66IK10

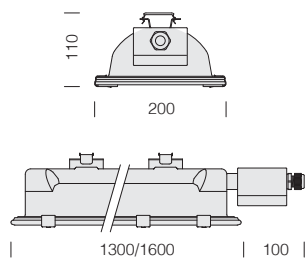

993 Forma ATEX - ZONE 2 / ZONE 22 - with transparent glass						
		CLD				LUMEN OUTPUT (tq= 25 °C)
LED	colour	weight	L	code	W tot	K - ølm - CRI
LED	grey	7.20	1300	162495-00	**45**	4000K - 6000lm - CRI>80
		9.20	1600	162496-00	**65**	4000K - 9264lm - CRI>80
Version complete with adjustable bracket (to purchase with sub-code -0074).						

993 Forma ATEX - ZONE 22 - with transparent glass						
		CLD				LUMEN OUTPUT (tq= 25 °C)
LED	colour	weight	L	code	W tot	K - ølm - CRI
LED	grey	7.20	1300	162497-00	**45**	4000K - 6000lm - CRI>80
		9.20	1600	162498-00	**65**	4000K - 9264lm - CRI>80
Version complete with adjustable bracket (to purchase with sub-code -0074).						

GENERAL CHARACTERISTICS

Housing/Frame: in die-cast aluminium with cooling fins integrated into the cover and designed with a very small surface exposed to wind.

Lenses: in PMMA, highly resistant to temperature and UV radiation.

Diffuser: with tempered glass, 4 mm thick, resistant to thermal shocks and impacts (UNI-EN 12150-1: 2001).

Coating: the standard powder coating consists of a first metal surface pre-treatment stage and of single layer of UV-stabilised, corrosion and salt resistant polyester powder coating.

LED: power factor ≥0.95.
Luminous flux maintenance 90%: 100.000h (L90B10).



2923 ATEX		
Protection against explosions	II 3G Ex nA OP IS IIC T4 IP66 Gc	II 3D Ex tc IIIC T135°C IP66 Dc
Allowed dangerous area	Zone 2 / Zone 22	Zone 22
ATEX version	Art. 2923 - 380060-00 / 380061-00 Art. 2923 - 380062-00 / 380063-00	Art. 2923 - 380065-00 / 380066-00 Art. 2923 - 380067-00 / 380068-00
Reference regulations	EN 60079-15 = Zone 2 EN 60079-31 = Zone 22	EN 60079-31 = Zone 22
	EN 60079-0, EN 60079-28 = Zone 2 and Zone 22	
Allowed room temperature	-20°C ÷ +40°C	
Degree of protection	IP66	
Installation	ceiling - suspension	
Casing mechanical resistance	IK08	

IP66IK08

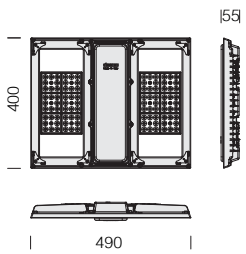



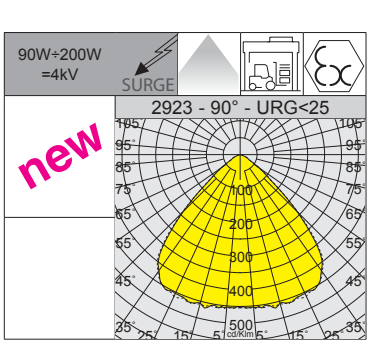

L90 B10 100.000h

RG0 Ethr

+40 C° -20

U.V.

LOW FLICKER

2923 Astro Q1 MINI ATEX - 90° - UGR<25 - ZONE 2 / ZONE 22					
		CLD			LUMEN OUTPUT (tq= 25 °C)
LED	colour	weight	code	W tot	K - ølm - CRI
LED	RAL 7021	5.00	380060-00	90	4000K - 16800lm - CRI 80
			380061-00	120	4000K - 22050lm - CRI 80
			380062-00	150	4000K - 27300lm - CRI 80
			380063-00	200	4000K - 33600lm - CRI 80

2923 Astro Q1 MINI ATEX - 90° - UGR<25 - ZONE 22					
		CLD			LUMEN OUTPUT (tq= 25 °C)
LED	colour	weight	code	W tot	K - ølm - CRI
LED	RAL 7021	5.00	380065-00	90	4000K - 16800lm - CRI 80
			380066-00	120	4000K - 22050lm - CRI 80
			380067-00	150	4000K - 27300lm - CRI 80
			380068-00	200	4000K - 33600lm - CRI 80


ELIQUO
HUBER
EPMC
EUROPE

KENDO HE



KENDO HE CONNECT



KENDO ACCESSORIES



Kendo intro p. 124
Kendo HE - single p. 126
Kendo HE - continuous line p. 130
Kendo acc. p. 134

TECHNO SYSTEM 2.0



TECHNO SYSTEM



POWER TRACK

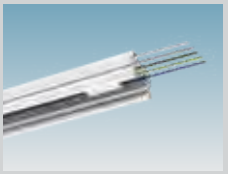

Techno System intro p. 136
Techno System 2.0 p. 138
Double power track + acc. p. 140
Techno System p. 144
Power track + acc. p. 150
Techno System FOOD p. 154

RAPID SYSTEM 1X



RAPID SYSTEM 2X



TRACK ACCESSORIES

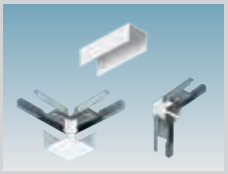

Rapid System p. 156

Accessories for power track and track p. 158

ASTRO Q MICRO



ASTRO Q MINI



ASTRO Q



Astro Q Micro p. 160
Astro Q Mini p. 170
Astro Q p. 176

QUASAR



SATURNO



QUARK



Quasar p. 182
Saturno p. 186
Quark p. 190

ARGON



GHOST



Argon p. 192
Ghost p. 193


Meeting
oom

Kendo - modular LED suspension/ceiling luminaire for integrated continuous line lighting

Kendo is the ideal solution for creating suspended or ceiling lighting systems that deliver uniform light distribution. Designed for single or continuous light line configurations, it provides precise architectural lighting supported by its minimalist design. The high-quality optics, optimised for visual efficiency, ensure uniform, glare-free lighting, making it ideal for ***SHOPS, RETAIL OUTLETS, OFFICES, AND PUBLIC OR INDUSTRIAL SPACES***, where visual comfort and aesthetic quality are essential. The luminaire's high energy efficiency makes it a sustainable choice, while its flexible modular design allows customised lighting layouts, easily adapting to different project and architectural specifications.

This luminaire is designed to offer maximum design flexibility, thanks to the L-shaped connection joint, the SPOT(light) module, the EM(ergency) modules and the blind module, enabling the creation of continuous light lines or creative geometric configurations. Its high **IP65** protection rating makes it suitable for a wide range of applications, from commercial and industrial spaces to public and professional environments. It is equipped with a **7-pole** connector for **DALI** dimmable versions with integration for **EM**ergency lighting. Moreover, the luminaire supports smart light management through the dedicated **DISMART 2.0 module**, meeting the most advanced safety and automation requirements. The integrated through-wiring ensures quick and easy installation, while also allowing flexible customisation according to the system's technical and functional specifications.

Thanks to these features, **Kendo** is a complete and highly adaptable lighting solution, capable of meeting the most demanding requirements in terms of design, efficiency and functionality.

GENERAL CHARACTERISTICS

Housing: extruded in self-extinguishing V2 PVC in white (black upon request).

Optics/Diffuser: high-performance polycarbonate, resistant to high temperatures and UV rays; lenticular versions with different photometric distributions: 30° narrow beam, 60°/90° wide beam, 35°×75° elliptical, asymmetric, bi-asymmetric.

Equipment: male/female connector for electrical connection, complete with **7-pole** switch for **EM**ergency or **DIMMable DALI** versions, with integrated phase selection device (*allowed cable cross-section 1.5 sqmm*); standard gear includes silicone rubber gaskets, steel suspension bracket/ceiling plate, junction bracket for continuous line installation, and extractable support bracket for the driver to facilitate maintenance and installation.

LED: power factor: ≥0.95.
Luminous flux maintenance 90%: 80.000h (L90B10).
Photobiological risk: exempt group.
Ambient temperature:
-10 °C to + 40 °C (excluding emergency versions).



Product with a very low flicker; uniform light for greater eye protection.

OTHER CHARACTERISTICS

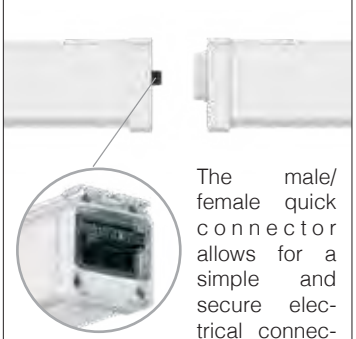

The male/female quick connector allows for a simple and secure electrical connection between fixtures, connection joints and the power supply line. The integrated phase selection device enables both phase selection and separate switching when the ceiling lights are installed in a continuous line.



The extremely compact body allows the creation of continuous rows. With the supplied connection joints, it is possible to form flexible geometric configurations perfectly adaptable to any architectural context.

OTHER INFORMATION



The UGR (unified glare rating) is an international unified measure developed by the CIE (Commission International de l'Eclairage) to assess the direct glare generated by a lighting system. The European standard regulating the lighting of indoor work places (**UNI-EN 12464-1**) recommends a specific UGR value for different applications ranging between **10 and 30**; **the lower the UGR value, the lower the glare**. The exact value of this index differs by project type because it depends on the position of the luminaires, room characteristics (dimensions, reflections) and on the point of observation of viewers.



As standard, the luminaire comes with an AC/DC driver, powered by a centralised emergency system, which is not incorporated into the fixture.



Standard version **CLD E** with **subcode -07**.



Standard version **CLD D-D (DALI)** wiring with **subcode -0041:** thanks to preprogrammed settings or a software programme, this type of wiring allows accurate light emission dimming.

UPON REQUEST



Possibility of centralized lighting point control or via **external** presence/lighting sensors (see chapter *Lighting management systems and recommendations*).



Version with optics in special polycarbonate material, **ideal for the food industry** with special processing methods (*contact the customer service to check compatibility between materials and food products*).



3000K-6500K versions and products fitting special LED sources for the **FOOD** sector (*Red Meat, Marbled Meat, Fish, Bread &, Pastries and Produce*).

Black version colour available.



Kendo includes versions with high precision optics, making it the most complete solution for fulfilling the diverse needs of new lighting systems as well as for the relamping of existing installations.

A wide range of light distributions, including wide beam diffusers, 30° narrow beam lenticular optics, 60°/90° wide beam, 35°×75° elliptical, asymmetric, and bi-asymmetric options, makes this fixture ideal for achieving the prescribed illuminance levels with a rational and efficient use of light.

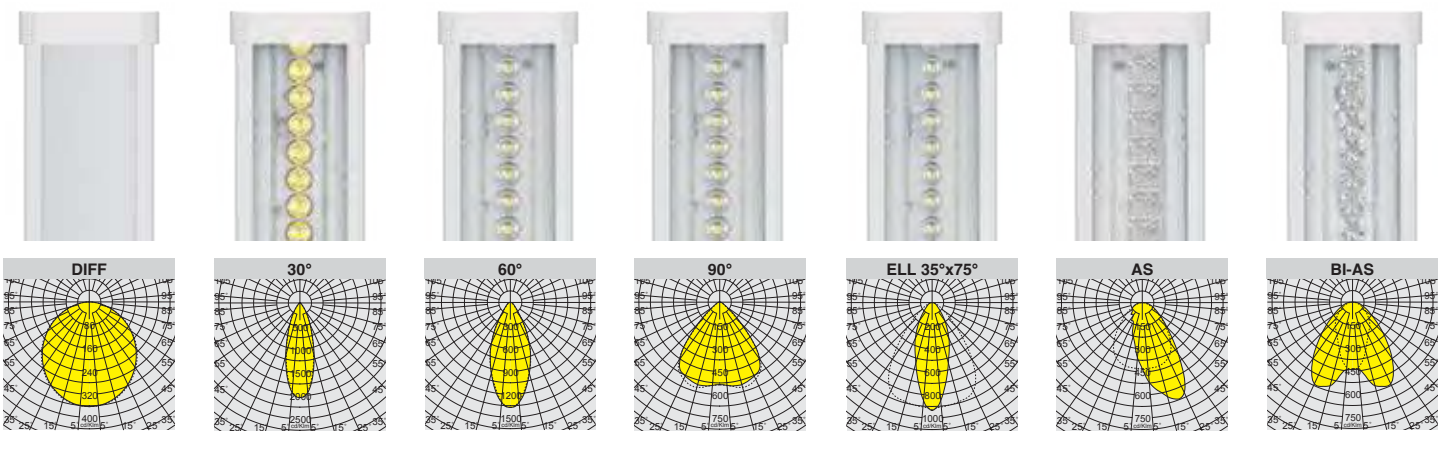

L90 B10 80.000h

RG0

+40 C° -10

EM S.A.

DIMM DIG

NO

LOW FLICKER

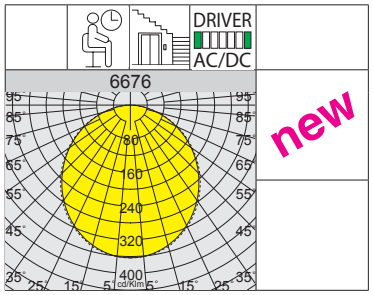

Upon request: black version colour available.



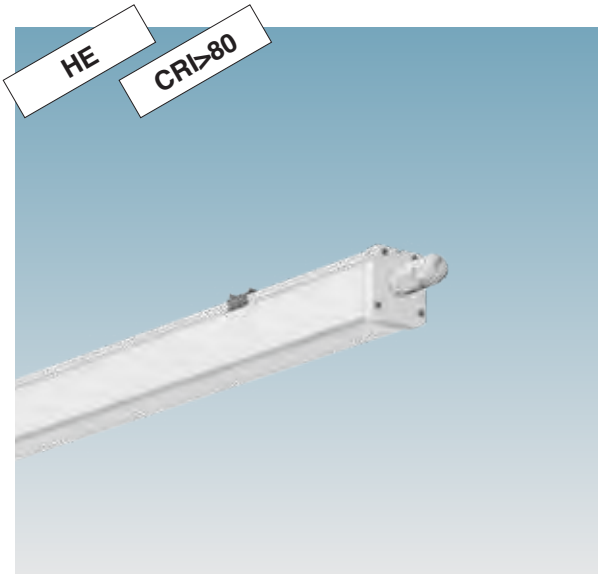

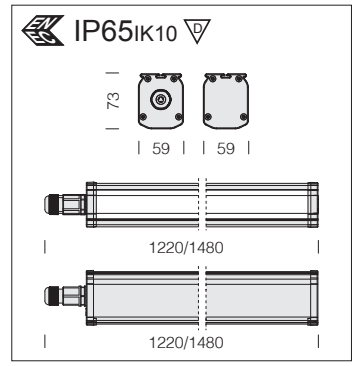

LED: power factor: ≥0.95. Luminous flux maintenance 90%: 80.000h (L90B10).

6676 Kendo HE - with opal diffuser

		CLD			CLD E	CLD D-D (DALI)		LUMEN OUTPUT (tq= 25 °C)
LED	housing	weight	L	code	code	code	W tot	K - ølm - CRI
LED	white	1.30	1220	134070-00	134070-07	134070-0041	40	4000K - **5670lm** - CRI>80
		1.50	1480	134072-00	134072-07	134072-0041	55	4000K - **7760lm** - CRI>80

Fixture supplied as standard with AC/DC driver for centralised emergency systems. **Upon request** version with pass-through wiring for **continuous line mounting (subcode -0072).**

L90 B10 80.000h

RG0

+40 C° -10

EM S.A.

DIMM DIG

NO

LOW FLICKER

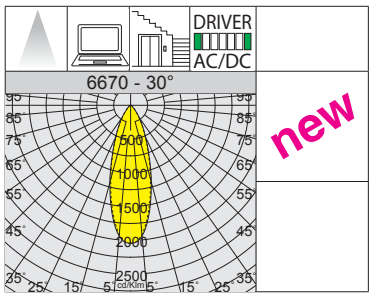

Upon request: black version colour available.



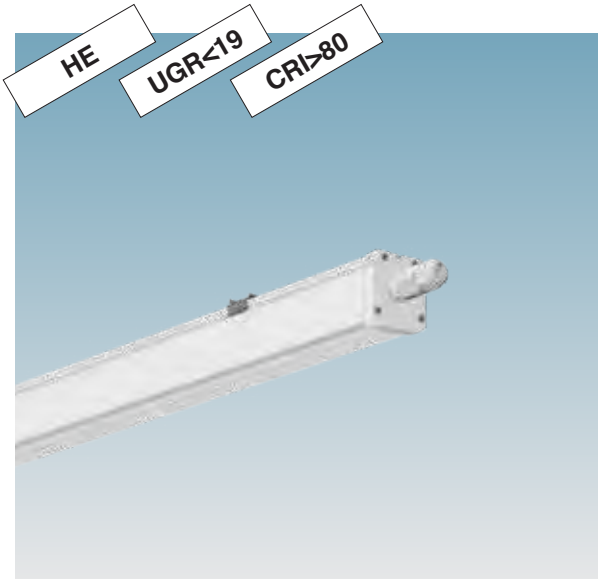

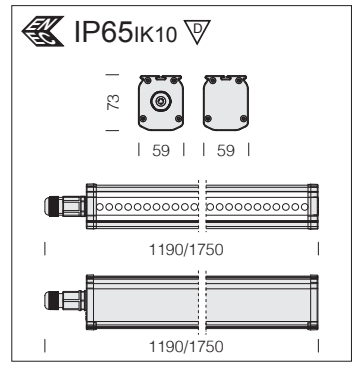

LED: power factor: ≥0.95. Luminous flux maintenance 90%: 80.000h (L90B10).

6670 Kendo HE - 30° narrow beam - UGR<19

		CLD			CLD E	CLD D-D (DALI)		LUMEN OUTPUT (tq= 25 °C)
LED	housing	weight	L	code	code	code	W tot	K - ølm - CRI
LED	white	1.30	1190	134000-00	134000-07	134000-0041	35	4000K - **6156lm** - CRI>80
		1.60	1750	134002-00	134002-07	134002-0041	50	4000K - **8816lm** - CRI>80

Fixture supplied as standard with AC/DC driver for centralised emergency systems. **Upon request** version with pass-through wiring for **continuous line mounting (subcode -0072).**

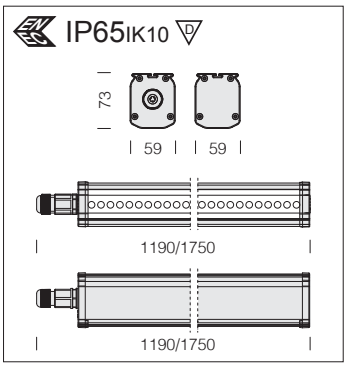

LED: power factor: ≥0.95. Luminous flux maintenance 90%: 80.000h (L90B10).

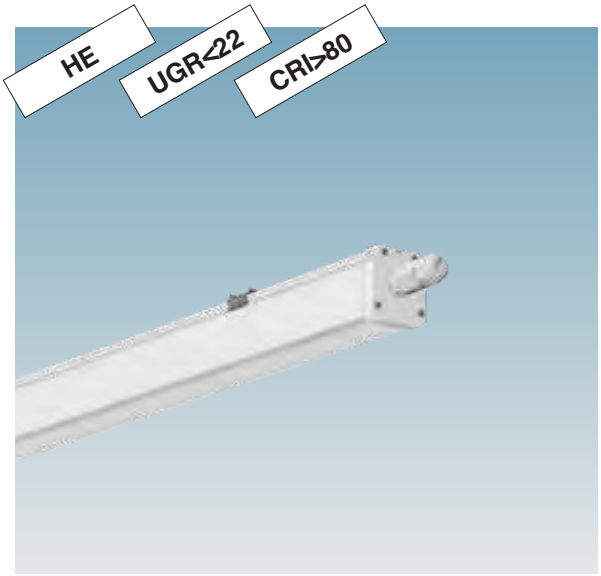

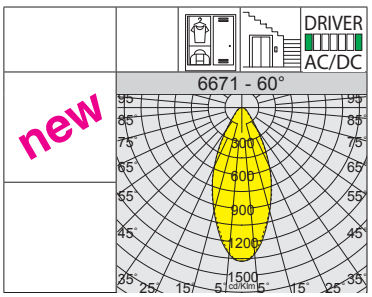

Upon request: black version colour available.



L90 B10 80.000h | RG0 | +40 C° -10 | EM S.A. | DIMM DIG | NO | LOW FLICKER

SUSPENSION

6671 Kendo HE - 60° wide beam - UGR<22

		CLD			CLD E	CLD D-D (DALI)		LUMEN OUTPUT (tq= 25 °C)
LED	housing	weight	L	code	code	code	W tot	K - ølm - CRI
LED	white	1.30	1190	134010-00	134010-07	134010-0041	**35**	4000K - **6250lm** - CRI>80
		1.60	1750	134012-00	134012-07	134012-0041	**50**	4000K - **8950lm** - CRI>80

Fixture supplied as standard with AC/DC driver for centralised emergency systems. **Upon request** version with pass-through wiring for **continuous line mounting (subcode -0072).**

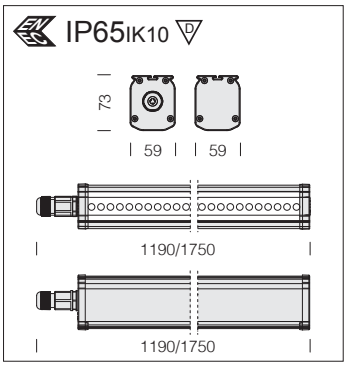

LED: power factor: ≥0.95. Luminous flux maintenance 90%: 80.000h (L90B10).

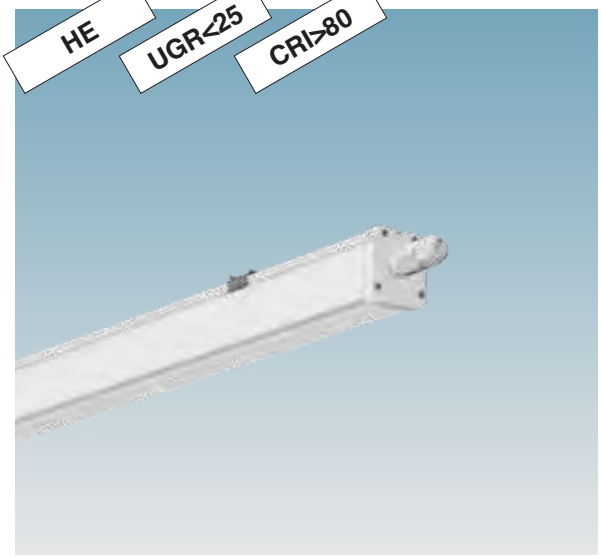

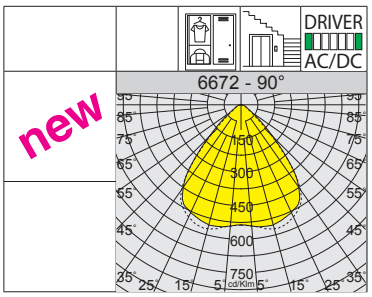

Upon request: black version colour available.



L90 B10 80.000h | RG0 | +40 C° -10 | EM S.A. | DIMM DIG | NO | LOW FLICKER

6672 Kendo HE - 90° wide beam - UGR<25

		CLD			CLD E	CLD D-D (DALI)		LUMEN OUTPUT (tq= 25 °C)
LED	housing	weight	L	code	code	code	W tot	K - ølm - CRI
LED	white	1.30	1190	134020-00	134020-07	134020-0041	**35**	4000K - **6188lm** - CRI>80
		1.60	1750	134022-00	134022-07	134022-0041	**50**	4000K - **8861lm** - CRI>80

Fixture supplied as standard with AC/DC driver for centralised emergency systems. **Upon request** version with pass-through wiring for **continuous line mounting (subcode -0072).**



L90 B10 80.000h

RG0

+40 C° -10

EM S.A.

DIMM DIG

NO

LOW FLICKER

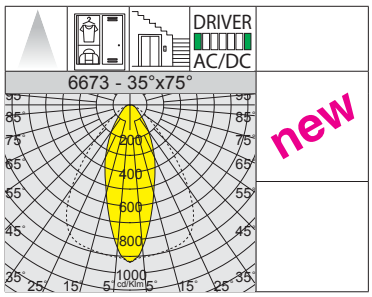

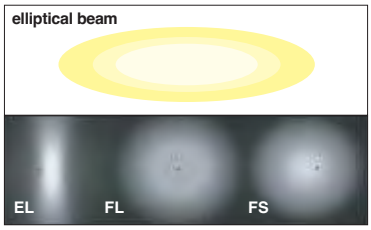

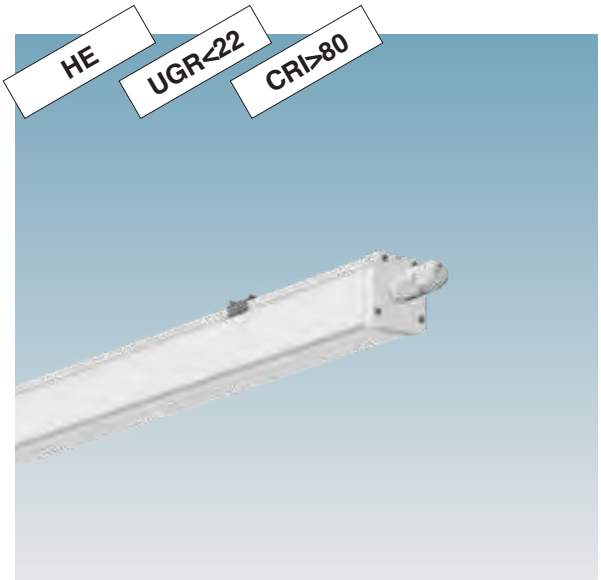

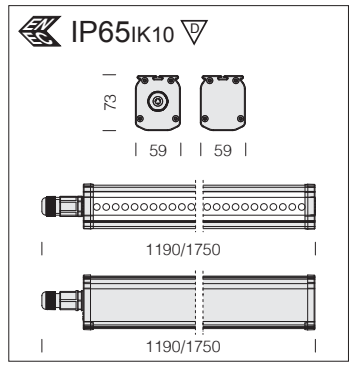

LED: power factor: ≥0.95. Luminous flux maintenance 90%: 80.000h (L90B10).

6673 Kendo HE - 35°x75° elliptical beam - UGR<22								
		CLD			CLD E	CLD D-D (DALI)		LUMEN OUTPUT (tq= 25 °C)
LED	housing	weight	L	code	code	code	W tot	K - ølm - CRI
LED	white	1.30	1190	134030-00	134030-07	134030-0041	35	4000K - **6156lm** - CRI>80
		1.60	1750	134032-00	134032-07	134032-0041	50	4000K - **8816lm** - CRI>80
Fixture supplied as standard with AC/DC driver for centralised emergency systems. **Upon request** version with pass-through wiring for **continuous line mounting (subcode -0072).**								

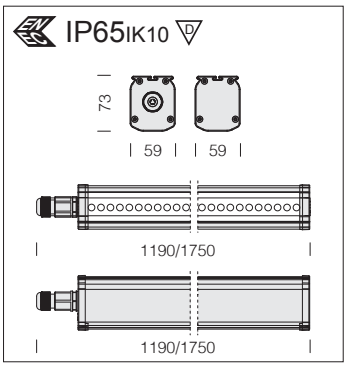

LED: power factor: ≥0.95. Luminous flux maintenance 90%: 80.000h (L90B10).

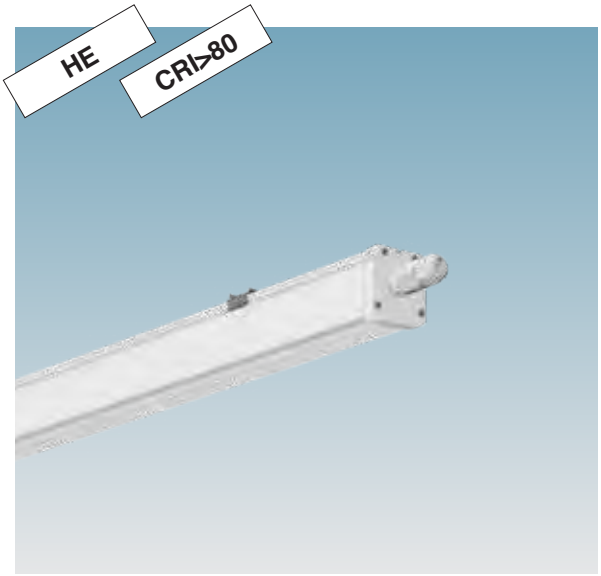

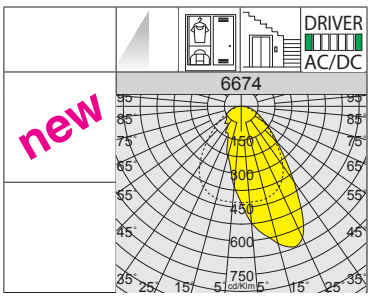

Upon request: black version colour available.



L90 B10 80.000h
RG0
+40 C° -10
EM S.A.
DIMM DIG
NO
LOW FLICKER

6674 Kendo HE - asymmetric

		CLD			CLD E	CLD D-D (DALI)		LUMEN OUTPUT (tq= 25 °C)
LED	housing	weight	L	code	code	code	W tot	K - ølm - CRI
LED	white	1.30	1190	134050-00	134050-07	134050-0041	35	4000K - **5875lm** - CRI>80
		1.60	1750	134052-00	134052-07	134052-0041	50	4000K - **8413lm** - CRI>80

Fixture supplied as standard with AC/DC driver for centralised emergency systems. **Upon request** version with pass-through wiring for **continuous line mounting (subcode -0072).**

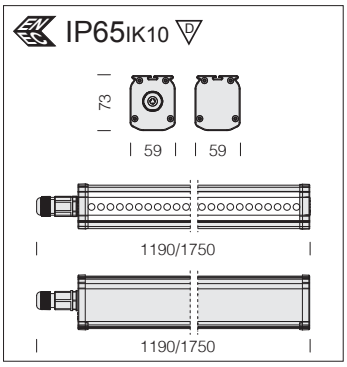

LED: power factor: ≥0.95. Luminous flux maintenance 90%: 80.000h (L90B10).

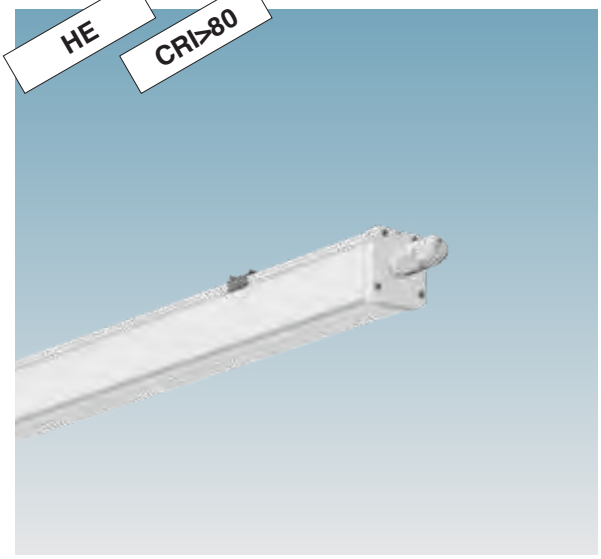

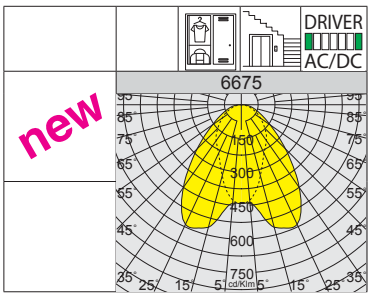

Upon request: black version colour available.



L90 B10 80.000h
RG0
+40 C° -10
EM S.A.
DIMM DIG
NO
LOW FLICKER

6675 Kendo HE - bi-asymmetric

		CLD			CLD E	CLD D-D (DALI)		LUMEN OUTPUT (tq= 25 °C)
LED	housing	weight	L	code	code	code	W tot	K - ølm - CRI
LED	white	1.30	1190	134060-00	134060-07	134060-0041	35	4000K - **6000lm** - CRI>80
		1.60	1750	134062-00	134062-07	134062-0041	50	4000K - **8592lm** - CRI>80

Fixture supplied as standard with AC/DC driver for centralised emergency systems. **Upon request** version with pass-through wiring for **continuous line mounting (subcode -0072).**

10 A
L90 B10 80.000h
RG0
+40 C° -10
DIMM DIG
NO
LOW FLICKER

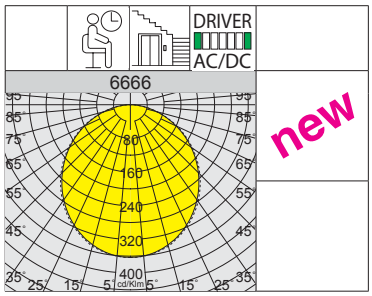

Upon request: black version colour available.



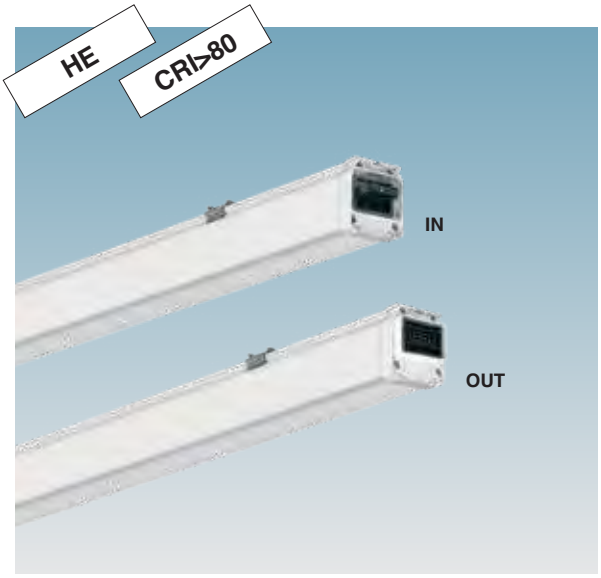

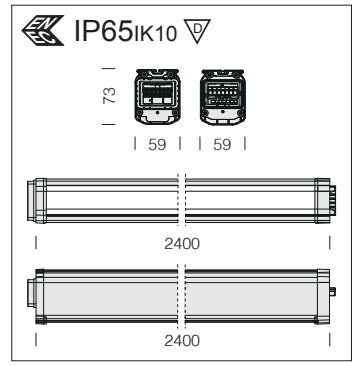

Standard features: complete with junction bracket for continuous line installation; male/female connector for electrical connection between fixtures.

LED: power factor: ≥0.95. Luminous flux maintenance 90%: 80.000h (L90B10).

6666 Kendo HE - CONNECT - with opal diffuser

		CLD		CLD D-D (DALI)		LUMEN OUTPUT (tq= 25 °C)
LED	housing	weight	code	code	W tot	K - ølm - CRI
LED	white	2.80	134160-00	134160-0041	**30**	4000K - **4980lm** - CRI>80
			134162-00	134162-0041	**40**	4000K - **6080lm** - CRI>80
			134164-00	134164-0041	**80**	4000K - **11105lm** - CRI>80

Fixture supplied as standard with AC/DC driver for centralised emergency systems.

10 A
L90 B10 80.000h
RG0
+40 C° -10
DIMM DIG
NO
LOW FLICKER
UGR <19

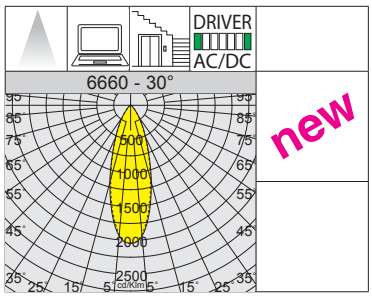

Upon request: black version colour available.



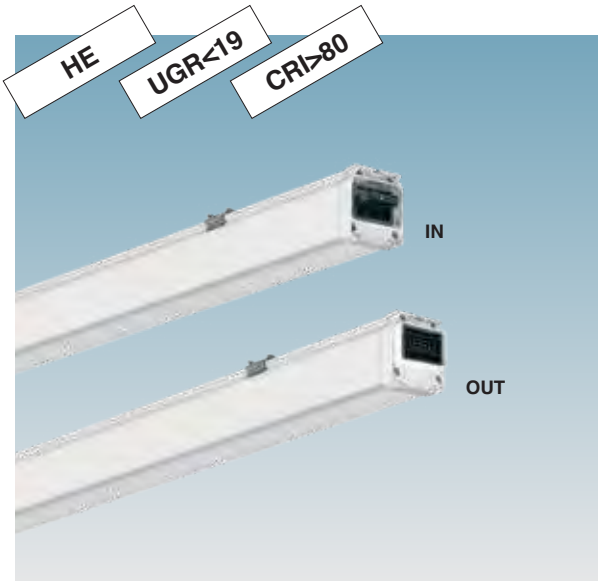

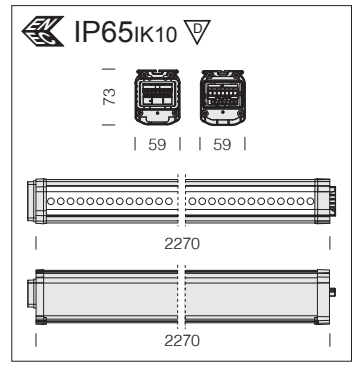

Standard features: complete with junction bracket for continuous line installation; male/female connector for electrical connection between fixtures.

LED: power factor: ≥0.95. Luminous flux maintenance 90%: 80.000h (L90B10).

6660 Kendo HE - CONNECT - 30° narrow beam - UGR<19

		CLD		CLD D-D (DALI)		LUMEN OUTPUT (tq= 25 °C)
LED	housing	weight	code	code	W tot	K - ølm - CRI
LED	white	2.70	134100-00	134100-0041	**30**	4000K - **5811lm** - CRI>80
			134102-00	134102-0041	**45**	4000K - **8274lm** - CRI>80
			134104-00	134104-0041	**65**	4000K - **11820lm** - CRI>80

Fixture supplied as standard with AC/DC driver for centralised emergency systems.

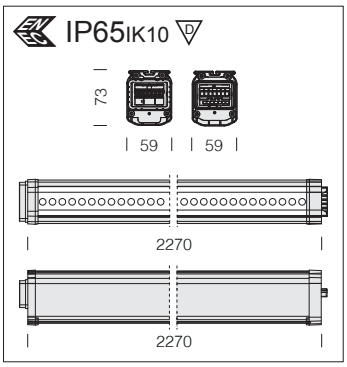

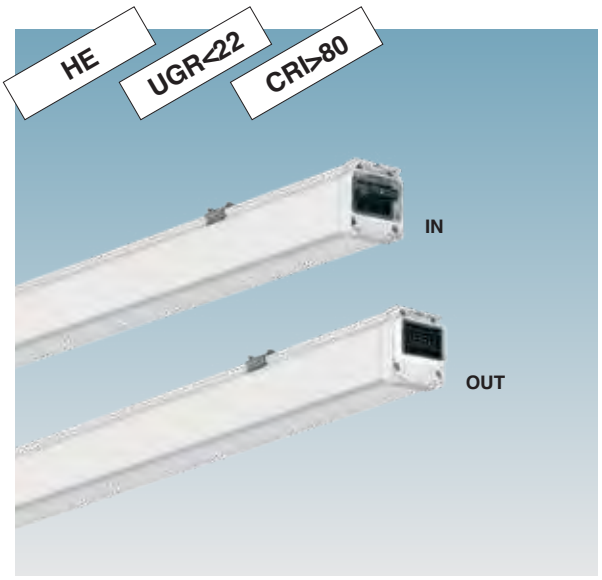

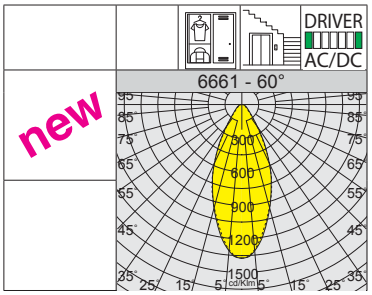

Upon request: black version colour available.



Standard features: complete with junction bracket for continuous line installation; male/female connector for electrical connection between fixtures.

LED: power factor: ≥0.95. Luminous flux maintenance 90%: 80.000h (L90B10).

6661 Kendo HE - CONNECT - 60° wide beam - UGR<22

		CLD		CLD D-D (DALI)		LUMEN OUTPUT (tq= 25 °C)
LED	housing	weight	code	code	W tot	K - ølm - CRI
LED	white	2.70	134110-00	134110-0041	**30**	4000K - **5900lm** - CRI>80
			134112-00	134112-0041	**45**	4000K - **8400lm** - CRI>80
			134114-00	134114-0041	**65**	4000K - **12000lm** - CRI>80

Fixture supplied as standard with AC/DC driver for centralised emergency systems.

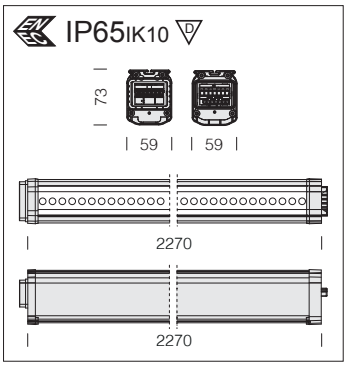

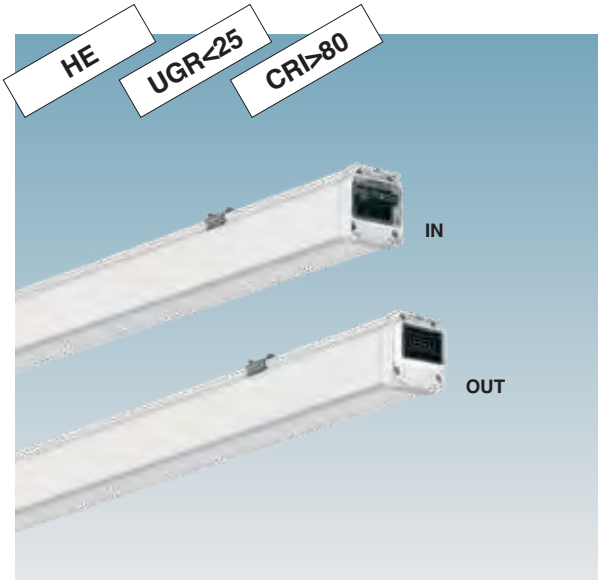

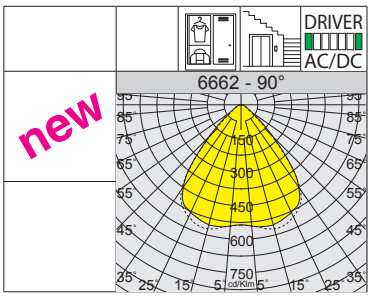

Upon request: black version colour available.



Standard features: complete with junction bracket for continuous line installation; male/female connector for electrical connection between fixtures.

LED: power factor: ≥0.95. Luminous flux maintenance 90%: 80.000h (L90B10).

6662 Kendo HE - CONNECT - 90° wide beam - UGR<25

		CLD		CLD D-D (DALI)		LUMEN OUTPUT (tq= 25 °C)
LED	housing	weight	code	code	W tot	K - ølm - CRI
LED	white	2.70	134120-00	134120-0041	**30**	4000K - **5841lm** - CRI>80
			134122-00	134122-0041	**45**	4000K - **8316lm** - CRI>80
			134124-00	134124-0041	**65**	4000K - **11880lm** - CRI>80

Fixture supplied as standard with AC/DC driver for centralised emergency systems.



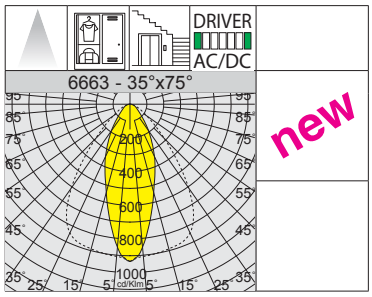

Upon request: black version colour available.



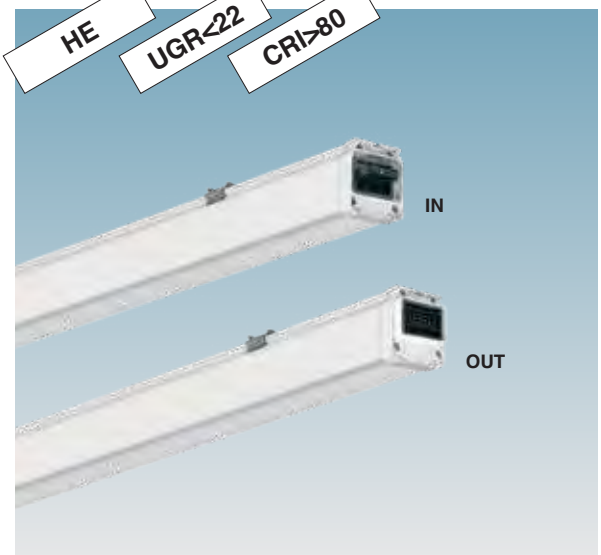

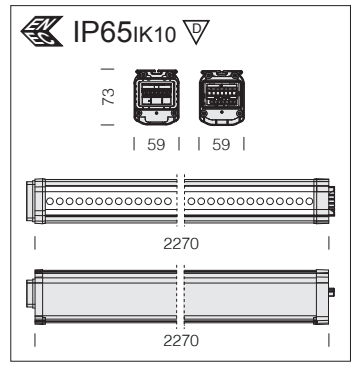

Standard features: complete with junction bracket for continuous line installation; male/female connector for electrical connection between fixtures.

LED: power factor: ≥0.95. Luminous flux maintenance 90%: 80.000h (L90B10).

6663 Kendo HE - CONNECT - 35°x75° elliptical beam - UGR<22						
			CLD	CLD D-D (DALI)		LUMEN OUTPUT (tq= 25 °C)
LED	housing	weight	code	code	W tot	K - ølm - CRI
LED	white	2.70	134130-00	134130-0041	**30**	4000K - **5811lm** - CRI>80
			134132-00	134132-0041	**45**	4000K - **8274lm** - CRI>80
			134134-00	134134-0041	**65**	4000K - **11820lm** - CRI>80
Fixture supplied as standard with AC/DC driver for centralised emergency systems.						

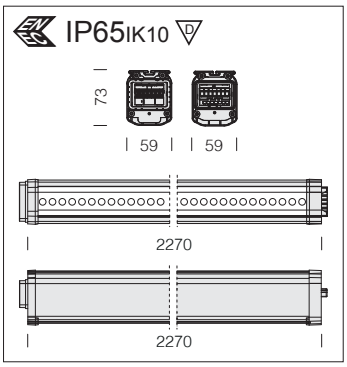

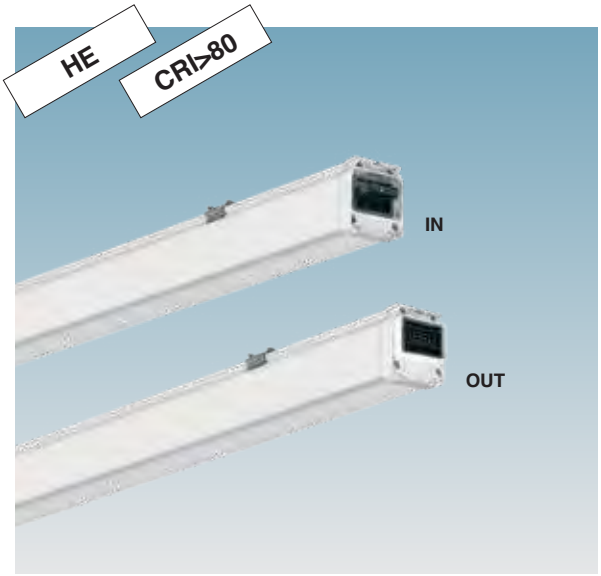

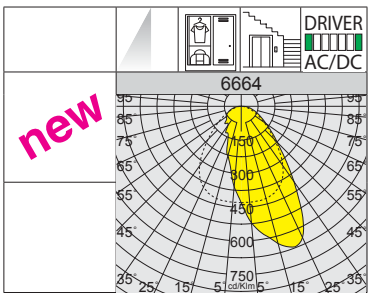

Upon request: black version colour available.



Standard features: complete with junction bracket for continuous line installation; male/female connector for electrical connection between fixtures.

LED: power factor: ≥0.95. Luminous flux maintenance 90%: 80.000h (L90B10).

6664 Kendo HE - CONNECT - asymmetric

		CLD		CLD D-D (DALI)		LUMEN OUTPUT (tq= 25 °C)
LED	housing	weight	code	code	W tot	K - ølm - CRI
LED	white	2.70	134140-00	134140-0041	**30**	4000K - **5546lm** - CRI>80
			134142-00	134142-0041	**45**	4000K - **7896lm** - CRI>80
			134144-00	134144-0041	**65**	4000K - **11280lm** - CRI>80

Fixture supplied as standard with AC/DC driver for centralised emergency systems.

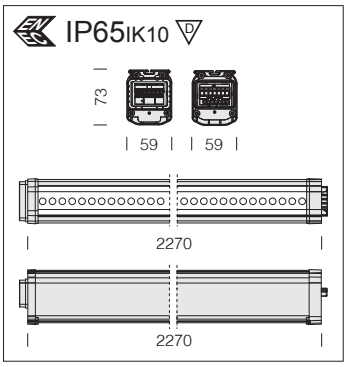

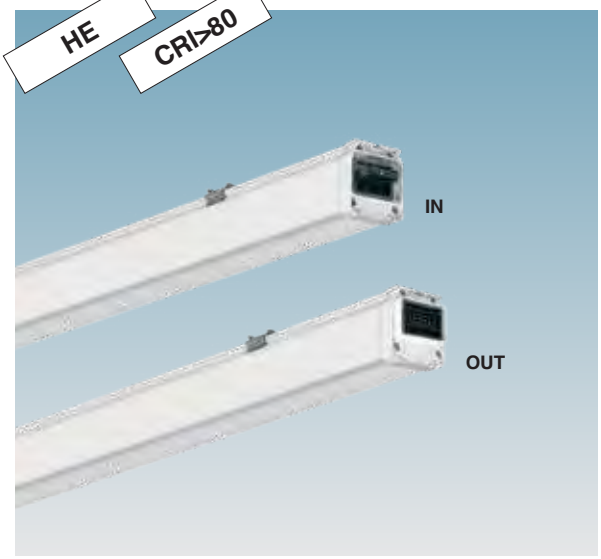

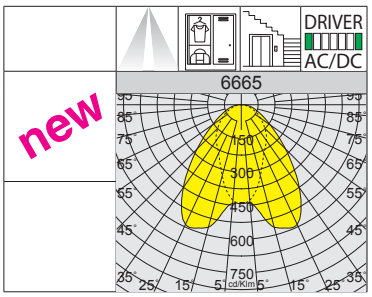

Upon request: black version colour available.



Standard features: complete with junction bracket for continuous line installation; male/female connector for electrical connection between fixtures.

LED: power factor: ≥0.95. Luminous flux maintenance 90%: 80.000h (L90B10).

6665 Kendo HE - CONNECT - bi-asymmetric

		CLD		CLD D-D (DALI)		LUMEN OUTPUT (tq= 25 °C)
LED	housing	weight	code	code	W tot	K - ølm - CRI
LED	white	2.70	134150-00	134150-0041	**30**	4000K - **5664lm** - CRI>80
			134152-00	134152-0041	**45**	4000K - **8064lm** - CRI>80
			134154-00	134154-0041	**65**	4000K - **11520lm** - CRI>80

Fixture supplied as standard with AC/DC driver for centralised emergency systems.

IP65 IK10 — **Watertight fixture** offering a high degree of protection against dust, water jets and external mechanical impacts.

196 lm/w — Its high efficiency makes it suitable for a wide range of applications, including **shops, retail spaces, offices, and public or industrial environments**.

Equipped with a **variety of precision optics**, it ensures optimal light control and visual quality in different settings

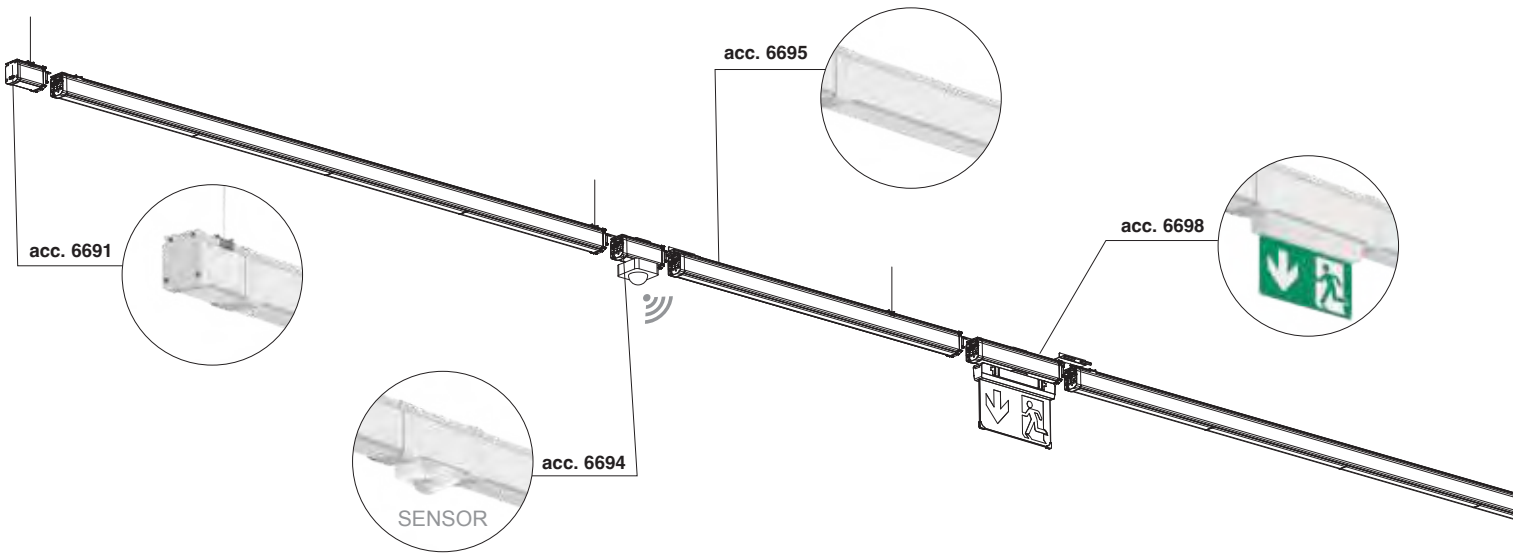

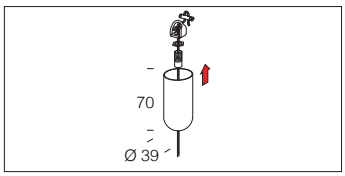

acc. 6510 suspension	
white	993914-00
Suspension supplied with Ø 2 mm steel wire, 1.5 m long. Max load: 30 kg. To suspend acc 6053.	

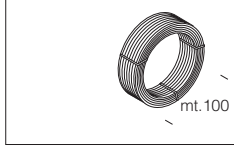

acc. 6512 wire	
steel	132930-00
Steel wire. To be used when installation requires a longer wire than the one supplied with acc. 6510.	

IP65 IK10

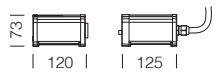

acc. 6691 power/closing module	
white	994052-00
To be used with the initial power supply and for terminating luminaires in a continuous line.	

IP65 IK10

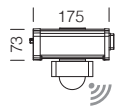

acc. 6694 module with SENSOR	
white	994058-00
Module complete with DIMM DALI presence and light sensor.	

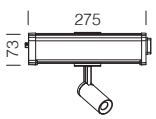

acc. 6692 module with SPOTLIGHT	
white	994054-00
Module complete with Fosnova spotlight, series Asso medium DIP-SWITCH 16÷22W-2200-2800lm (Available with FS-FM-FL optics).	

IP54 IK10

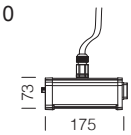

acc. 6697 POWER module	
white	994082-00
To be used for powering external devices (monitors, speakers, cameras, etc.).	

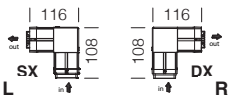

acc. 6693 L-shaped joint		
right	white	994056-00
left	white	994057-00
L-shaped electrical joint; allows for the angular L-shaped mechanical/electrical connection of fixtures..		

IP65 IK10

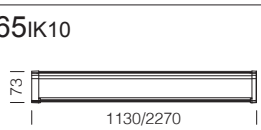

acc. 6695 module S		
1130mm	white	994060-00
2270mm	white	994062-00
Module S for continuous line. To be used to allow cable routing.		

IP65 IK10



S.E. Emergency (Only emergency): in the event of a black-out the one lamp connected to the back-up circuit ignites. **S.A. Emergency (Maintained)**: in the event of a black-out the one lamp connected to the back-up circuit stays on. When power is restored, the battery recharges automatically.

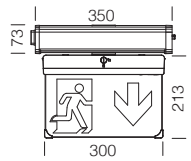

S.A. Emergency (Maintained): in the event of a black-out the one lamp connected to the back-up circuit stays on, thus avoiding the inconvenience caused by a sudden absence of all light. Emergency run time: 180 minutes. When power is restored, the battery recharges automatically.

acc. 6696 EM S.E. - S.A. module						
vers.	couleur	code	W tot	K - ølm - CRI	EM	
DIFF	white	994065-00	***20**	4000K - 2750lm - CRI 80	3h	30%
30°	white	994067-00	**12**	4000K - 2167lm - CRI 80	3h	30%
60°	white	994069-00	**12**	4000K - 2200lm - CRI 80	3h	30%
90°	white	994071-00	**12**	4000K - 2178lm - CRI 80	3h	30%
35°x75° ELL	white	994073-00	**12**	4000K - 2167lm - CRI 80	3h	30%
AS	white	994075-00	**12**	4000K - 2068lm - CRI 80	3h	30%
BI-AS	white	994077-00	**12**	4000K - 2112lm - CRI 80	3h	30%
Emergency module (3 h) for continuous light lines, to be purchased only for systems without centralised emergency. Can be configured in S.E. (Emergency Only) or S.A. (Always ON) mode using the phase selector. Upon request the DALI version is available with subcode -95.						

acc. 6698 Safety Flag S.A. - 3h module			
white	994080-00	3W	6500K - 320lm - CRI 80
Module with Safety Flag S.A. ceiling light in EM mode with self-test button providing real-time status information; autonomy ≥ 3 h with recharging in ≤ 24 h. Power in EM mode: 1W. DALI version is available with subcode -95.			

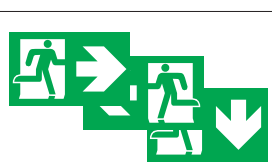

acc. 470 labels for acc. 6698	
right out	995150-00
left out	995151-00
down out	995152-00
Pictograms available and visible up to 40 m. UNI EN1838. Bag containing 2 pieces	



As standard, the quick connector includes a **7-pole** selector switch (for **Em**ergency or **DIMMable DALI** versions) with a built-in phase selection device.

EM / DALI

Standard versions in **EM or DALI** allow efficient and flexible management of general lighting systems

SMART light management is available thanks to the **DISMART 2.0** system or through modules with presence and light sensors

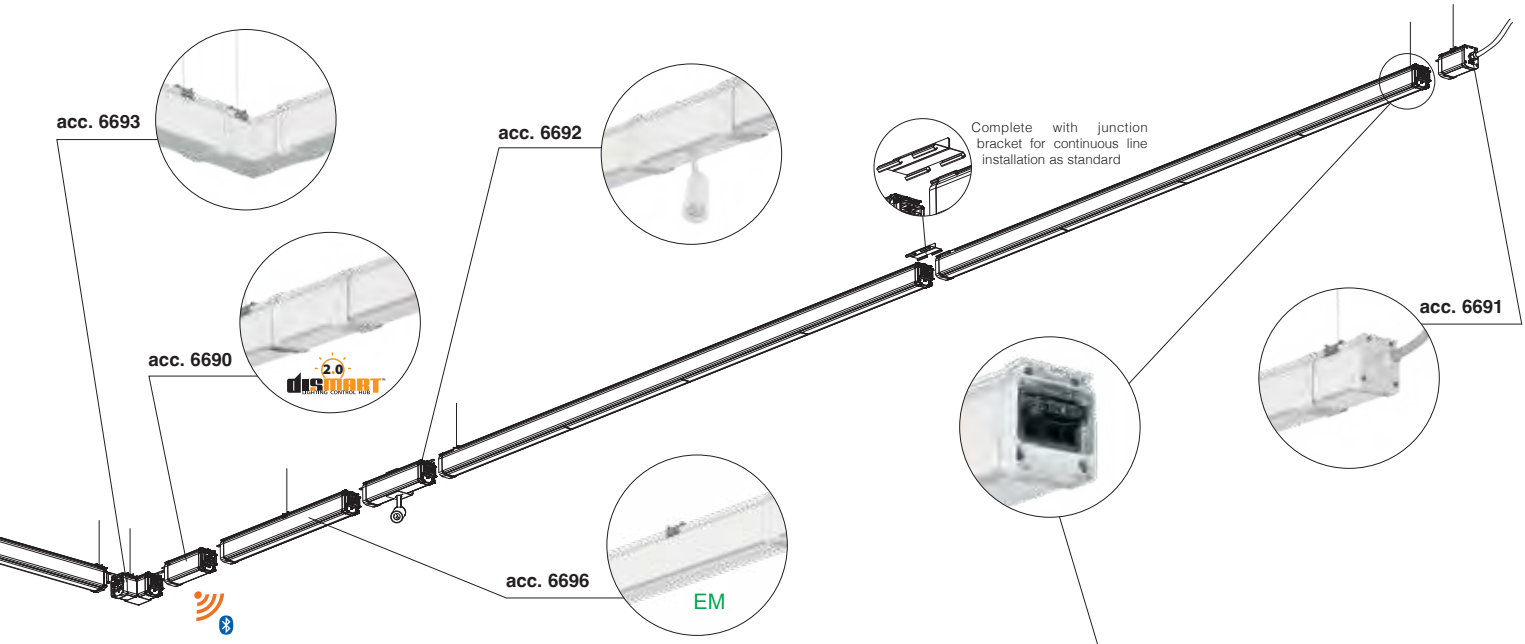

The male/female quick connector allows for a simple and secure electrical connection between fixtures, connection joints and the power supply line. The integrated phase selection device enables both phase selection and separate switching when the ceiling lights are installed in a continuous line (*allowed cable cross-section 1.5 sqmm*).

TERMINAL	CONFIGURATION				
	STANDARD	EMERGENCY / UPS	PUSH DALI SENSOR acc. 6694	SENSOR ON/OFF upon request	MAX LOAD
L1	Phase 1	Phase 1	Phase 1	Phase 1	10A
L2	Phase 2	Phase 2	Phase 2	Phase 2 (L OUT sensor Max 3A)	10A
L3	Phase 3	Phase 3 (L EM / UPS)	Phase 3	Phase 3	10A
PE	Ground	Ground	Ground	Ground	10A
N	Neutral	Neutral (comm)	Neutral	Neutral	10A
D1	Dali +	Dali +	Da + (L push)	Dali +	10A
D2	Dali -	Dali -	Da - (N push)	Dali -	10A

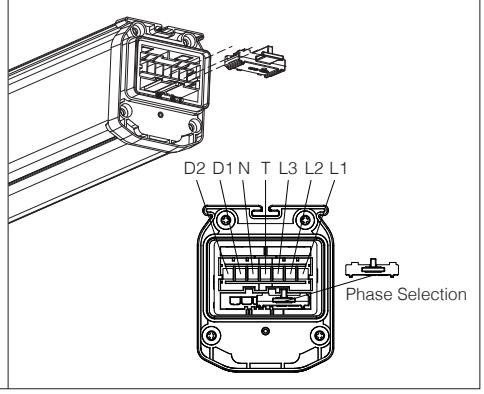

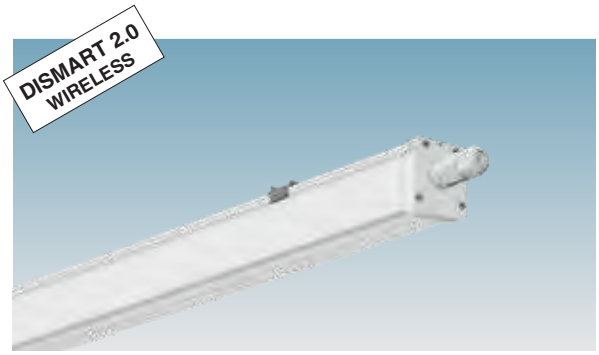

To set up a **DISMART 2.0** system, you will need to order the following products:
1) WIRELESS luminaire complete with **light controller** module with **subcode -24**
2) Gateway module with code **81410011** that will generate the Wi-Fi local network
3) DALI2 sensor interface or N.O. buttons in IP65 box with code **81410014**
4) DIMM DALI/DALI2 luminaire with **subcode -0041,** dwhich will be associated to the **DISMART 2.0** interface in IP65 box with acc. **6690**
5) Free App for mobile devices for complete system management and parameter configuration

IP65 IK10

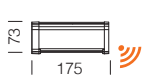

acc. 6690 DISMART 2.0 module	
white	994050-00
Module with DISMART 2.0 interface. To be used to enable wireless control of the luminaires.	

DISMART 2.0 - A wireless lighting management system designed for installers and end users, while also supporting designers thanks to its easy integration into lighting installations and compliance with minimum environment criteria (CAMs) for public spaces.

The system is controlled through a simple, user-friendly app and requires no qualified personnel for setup, optimising energy savings and enhancing visual comfort.

It applies mainly to the following sectors: **INDUSTRIAL, LOGISTICS, INDOOR SPORTS.**

CONNECTED AND READY FOR USE IN 3 SIMPLE STEPS



1 **DOWNLOAD:**
download the free version of the iOS/Andorid app

2 **SET UP:**
connect to the gateway of your mobile phone/tablet, then add lamps/sensors/buttons (via QR code)

3 **MANAGE:**
you can create groups and set up control for the lights in each room.

EXAMPLE OF USE

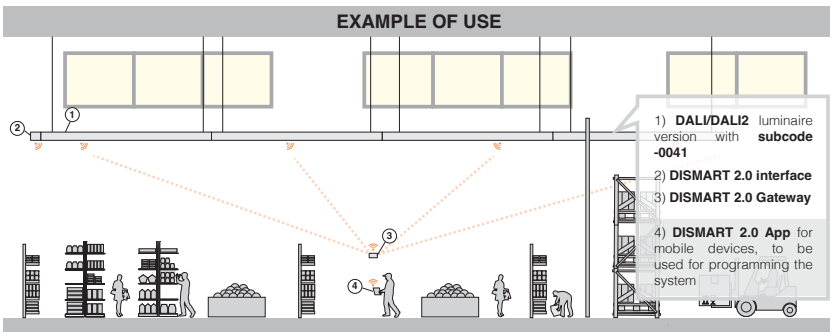

DISMART DISMART 2.0 – Radiofrequency mesh network communication



GENERAL CHARACTERISTICS

Techno System comes in a wide range of optics with different sets of LED sources. This allows the lamp to fit any system and obtain the best lighting output with the greatest energy efficiency.
Equipped with latest generation, high efficiency CRI 80 LED sources, Thanks to the dedicated support box, the system can fit Fosnova spotlights from the **Focus-Focus Slim T/Q and Vision 2.0** range and from the **Safety Flag** emergency series, or with a presence and light **sensor**.

Housing: in rolled galvanized steel, pre-coated with polyester resin, UV-stabilised, with rounded edges and ABS ends.

Optics: it comes in two separate versions:
- one with **optics lens in** polycarbonate and different light distributions, including 90° symmetric, 25° asymmetric, 25° bi-asymmetric, 30°x80° elliptic, UGR<22 and 60° wide-beam curves
- one with **semi-spherical diffuser** and wide-beam light distribution.

Equipment: 3-pole insulator block with phase selection (**5-pole** insulator block for the **EM**ergency and **DALI DIMM**able versions).
Supplied with external clamping system to hook the fixture directly to the cable track to combine with **5/7/11** pole track with the relevant phase selection.

LED characteristics: power factor: ≥0.95.
Luminous flux maintenance 90%: 80.000h (L90B10).
Photobiological risk class: exempt group.
Ambient temperature: -10°C to + 40°C.

OTHER CHARACTERISTICS



The fixture can be easily and, above all, safely hooked to the track with the clips thanks to the mechanical safety locking system. With its simple, modern design Techno System blends perfectly into any space



Mechanical safety lock to mount the lighting fixture directly to the track



Plug insulator block mounted directly onto the fixture's body

DIMM DIG

Standard version **CLD D-D (DALI)** wiring with **subcode -0041:** thanks to pre-programmed settings or a software programme, this type of wiring allows accurate light emission dimming.

EM S.A.

EM: subcode -07

LOW FLICKER

Product with a very low flicker; uniform light for greater eye protection.

OTHER INFORMATION

Quality: is built with accurately selected materials and electronic components to ensure amazing light levels and high precision optics as well as greater design flexibility, making the new Techno System a sector leading product.

Flexible: includes versions with high precision optics, making it the most complete solution for fulfilling the diverse needs of new lighting systems as well as for the relamping of existing installations.

Cost-effective: uses latest generation LED technology to produce light with unprecedented energy efficiency to notably reduce running costs and ensure quick payback.

Versatile: is the most complete solution to meet the diverse lighting needs of industrial and retail spaces; you can create continuous rows of light that can be easily adjusted to any interior architecture thanks to its spigot couplings.

Quick and easy: can be mounted in very few seconds; the lamp body can be hooked directly to the 6001 power track.

Low maintenance: features long-lasting LED sources, closed optics and a linear design that were specifically studied to minimize maintenance and cleaning needs to reduce running costs, while ensuring great light efficiency.

UPON REQUEST

Possibility of centralized lighting point control or via **external** presence/lighting sensors (see chapter *Lighting management systems and recommendations*).

-0050 EM-EC

Version **CLD EC** wiring with **subcode -0050:** permanently mounted fixture, operating in AC/DC mode, with centralized emergency device, not incorporated into the fixture.

3000K 6500K FOOD

3000K-6500K versions and products fitting special LED sources for the **FOOD** sector (*Red Meat, Marbled Meat, Fish, Bread &, Pastries and Produce*).

TECHNO SYSTEM FIXTURES WITH SUBCODE -42



Versions complete with upper cover (to be ordered separately with subcode -42) designed to mount the fixture directly to the ceiling.

Power track art. 6001-6002-6003 and 6021-6022-6023: designed for the rapid mounting of **Techno System** fixtures. The power track can be installed using the dedicated accessory for suspension with cable or chain; thanks to spigot couplings, you can easily create continuous rows of light to meet diverse lighting and structural needs. The fixture and the track are easily locked together with the external clamping system for simple, safe and easy mounting, without the use of tools.

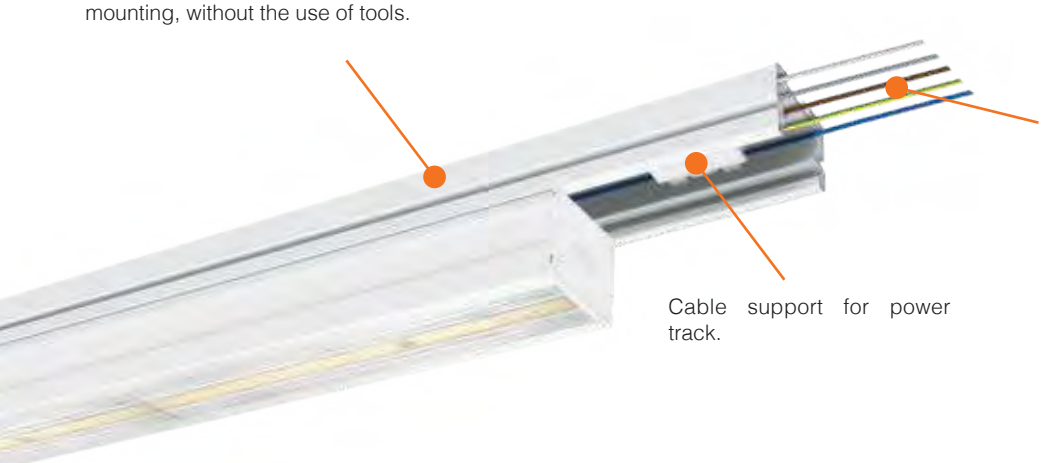

Cable support for power track.

The power track is designed to house **5-pole** or **7-pole** terminal block (the latter to be used for the **EM**ergency or **DIMM**able **DALI** versions) or **11-pole** blocks (the latter to be used for the **EM**ergency and **DIMM**able **DALI** versions).



wide-beam (with semi-spherical diffuser)

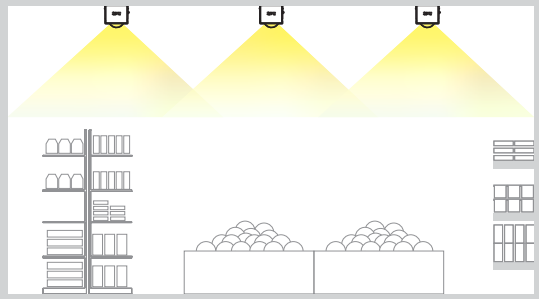

IP40IK07

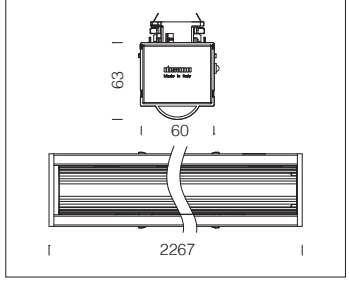

Versions with wide-beam distribution
Fixtures with wide-beam lighting distributions are suited for illuminating shelves in supermarkets or for aisles displaying fresh fruits and vegetables or generally any area that requires constant and uniform lighting.

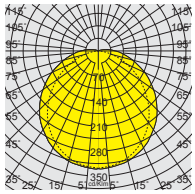

6646 Techno System 2.0 - DOUBLE

			CLD		LUMEN OUTPUT (tq= 25 °C)
LED	weight	L	code	W tot	K - ølm - CRI
LED	2.50	2267	133067-00	**46**	4000K - 7617lm - CRI 80
			133068-00	**93**	4000K - 15238lm - CRI 80
Available **EM** (**sub-code -07**) and **DIMM DALI** (**sub-code -0041**) versions.					



60° wide-beam optics

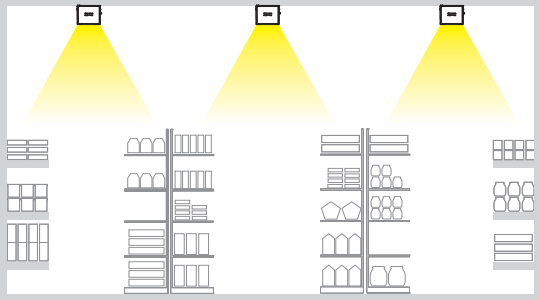

IP40IK07

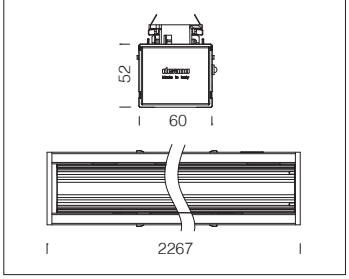

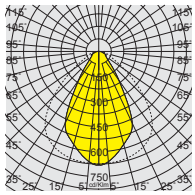

6645 Techno System 2.0 - DOUBLE

			CLD		LUMEN OUTPUT (tq= 25 °C)
LED	weight	L	code	W tot	K - ølm - CRI
LED	2.50	2267	133047-00	**46**	4000K - 7888lm - CRI 80
			133048-00	**93**	4000K - 15778lm - CRI 80
Available **EM** (**sub-code -07**) and **DIMM DALI** (**sub-code -0041**) versions.					



90° symmetric optics

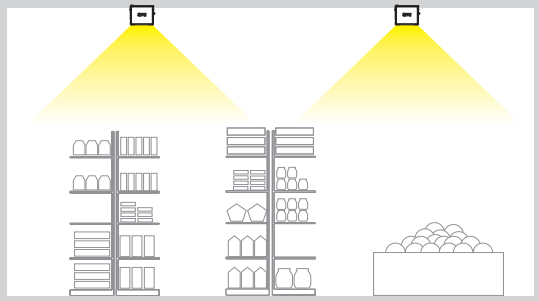

IP40IK07

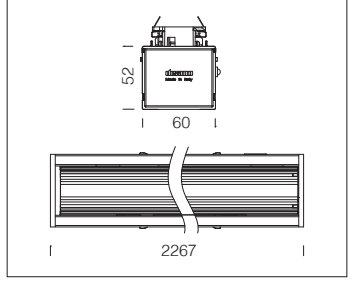

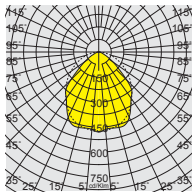

6641 Techno System 2.0 - DOUBLE

			CLD		LUMEN OUTPUT (tq= 25 °C)
LED	weight	L	code	W tot	K - ølm - CRI
LED	2.50	2267	133007-00	**46**	4000K - 7879lm - CRI 80
			133008-00	**93**	4000K - 15758lm - CRI 80
Available **EM** (**sub-code -07**) and **DIMM DALI** (**sub-code -0041**) versions.					

IP40IK07

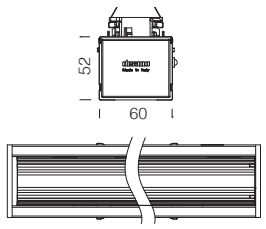

30°x80° elliptic optics

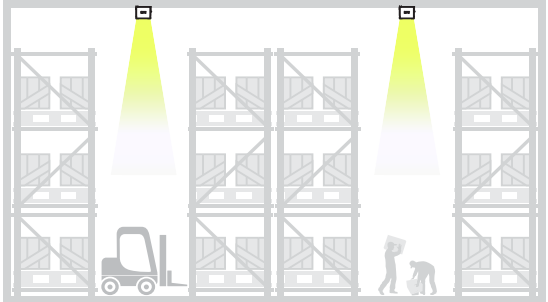



6644 Techno System 2.0 - DOUBLE					
			CLD		LUMEN OUTPUT (tq= 25 °C)
LED	weight	L	code	W tot	K - ølm - CRI
LED	2.50	2267	133037-00	**46**	4000K - 7838lm - CRI 80
			133038-00	**93**	4000K - 15678lm - CRI 80
Available **EM** (**sub-code -07**) and **DIMM DALI** (**sub-code -0041**) versions.					

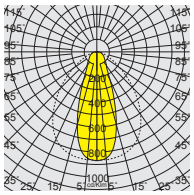

30°x80° elliptic optics
suited for illuminating retail stores with tall shelves, where light must spread out evenly and efficiently.

IP40IK07

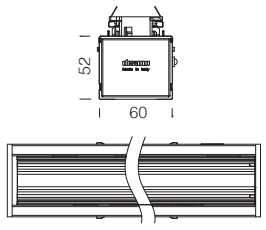

25° asymmetric optics

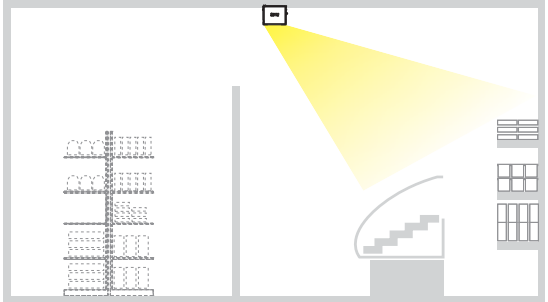



6642 Techno System 2.0 - DOUBLE					
			CLD		LUMEN USCENTI (tq= 25 °C)
LED	peso	L	codice	W tot	K - ølm - CRI
LED	2.50	2267	133017-00	**46**	4000K - 7307lm - CRI 80
			133018-00	**93**	4000K - 14605lm - CRI 80
Available **EM** (**sub-code -07**) and **DIMM DALI** (**sub-code -0041**) versions.					

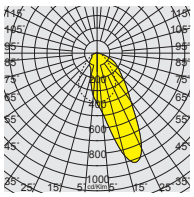

25° asymmetric optics
photometric distribution is studied for the furniture of retail areas where shelves are arranged laterally.

IP40IK07

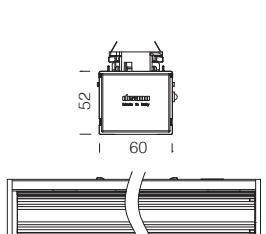

25° bi-asymmetric optics

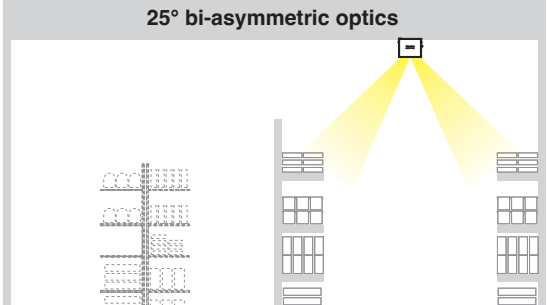



6643 Techno System 2.0 - DOUBLE					
			CLD		LUMEN OUTPUT (tq= 25 °C)
LED	weight	L	code	W tot	K - ølm - CRI
LED	2.50	2267	133027-00	**46**	4000K - 8100lm - CRI 80
			133028-00	**93**	4000K - 16200lm - CRI 80
Available **EM** (**sub-code -07**) and **DIMM DALI** (**sub-code -0041**) versions.					

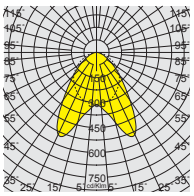

25° bi-asymmetric optics
perfect for retail spaces where the lighting system must produce accent lighting on shelves and on the wares, while the lighting in the aisles is more general.

Track housing: painted rolled steel with rounded edges for hand safety and galvanized steel previously stove-enamelled with a UV-stabilised, anti-yellowing white polyester resin applied after phosphate treatment; supplied with cable 1,5 mm².

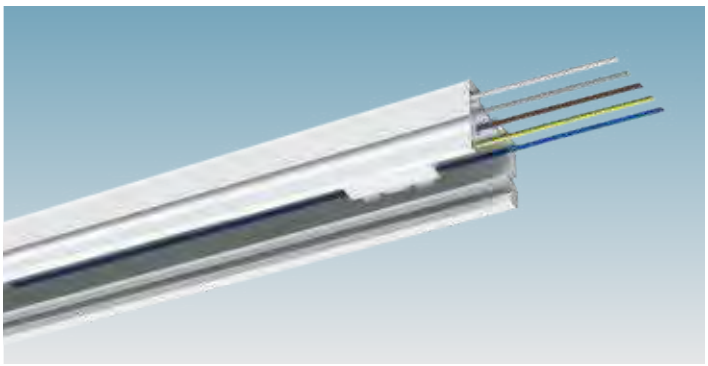

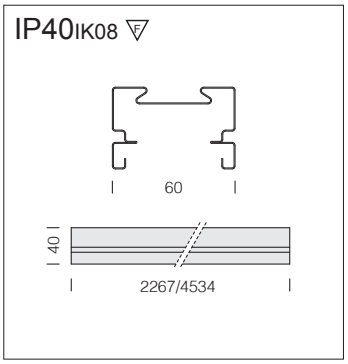

The **power track 6021** is available in one standard length of 4534mm. These lengths correspond exactly to the length of 2 linear luminaires, so basically the track is made to be used with 2 connectors depending on the length chosen.

6021 power track - for continuous line

			S	
size	colour	conductors	weight	code
4534	white	**5-pole**	4.70	132980-00
		7-pole		132981-00
		11-pole		132982-00

Designed to allow the quick continuous line mounting of luminaires of the Techno System 2.0 series.

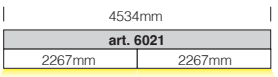

The **power track 6022** is designed to be used with a lower number of connectors for applications where continuous line mounting is not required. It will ensure aesthetic uniformity (due to the absence of unused connectors) and increase savings.

6022 power track - single luminaires

			S		
size	colour	conductors	weight	code	
2267 1 connecteur	blanc	**5-pole**	3.10	132984-00	
		7-pole		132986-00	
		11-pole		132990-00	
size	colour	conductors	weight	**1 connector (L)** code	**1 connector (R)** code
4534 1 connector	white	**5-pole**	4.90	132991-00	132992-00
		7-pole		132993-00	132994-00
		11-pole		132995-00	132996-00

Designed to allow the quick non-continuous line mounting of single luminaires of the Techno System 2.0 series.

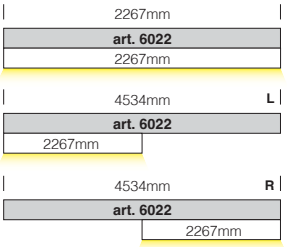

The **power track 6023** is made to be used without any fixed connector. In this case luminaires are mounted with accessory 6620 (mobile disconnector), by positioning any number of luminaires anywhere along the track. Further lengths and special configurations can be ordered after verification upon the buyer's request.

6023 power track - without connector

			S	
size	colour	conductors	weight	code
2267	white	**5-pole**	3.10	132962-00
		7-pole		132963-00
		11-pole		132964-00
4534	white	**5-pole**	4.90	132967-00
		7-pole		132968-00
		11-pole		132969-00

Designed to allow the mounting of luminaires of the Techno System 2.0 series anywhere along the track. Purchase acc. 6620 separately.

Detail of fixed connector position with power track art. 6021 - 6022

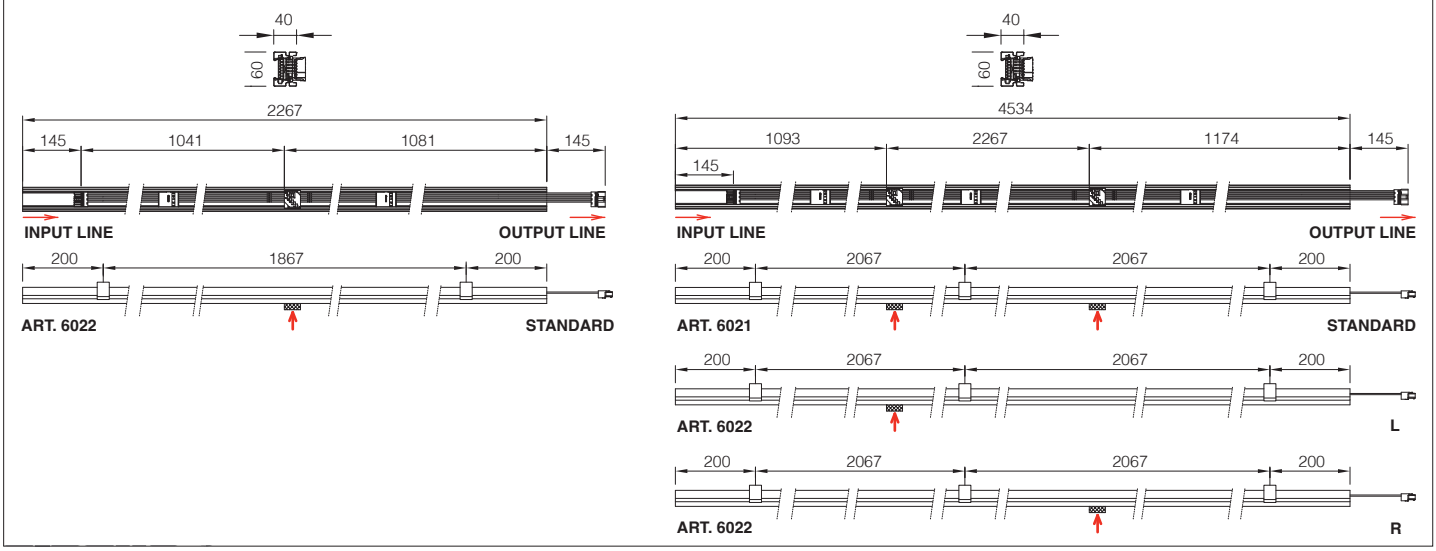

Frame structure for the creation of continuous row of Techno System fixtures or in combination with other products (see table). Simple and quick mounting as a ceiling or a suspension fixture thanks to the wide range of accessories. The power track is designed to house **5-pole** or **7-pole** terminal block (the latter to be used for the **EM**ergency or **DIMM**able **DALI** versions) or **11-pole** blocks (the latter to be used for the **EM**ergency and **DIMM**able **DALI** versions) with rapid connectors.

Mounting Techno System fixture on power track art. 6021 - 6022 - 6023

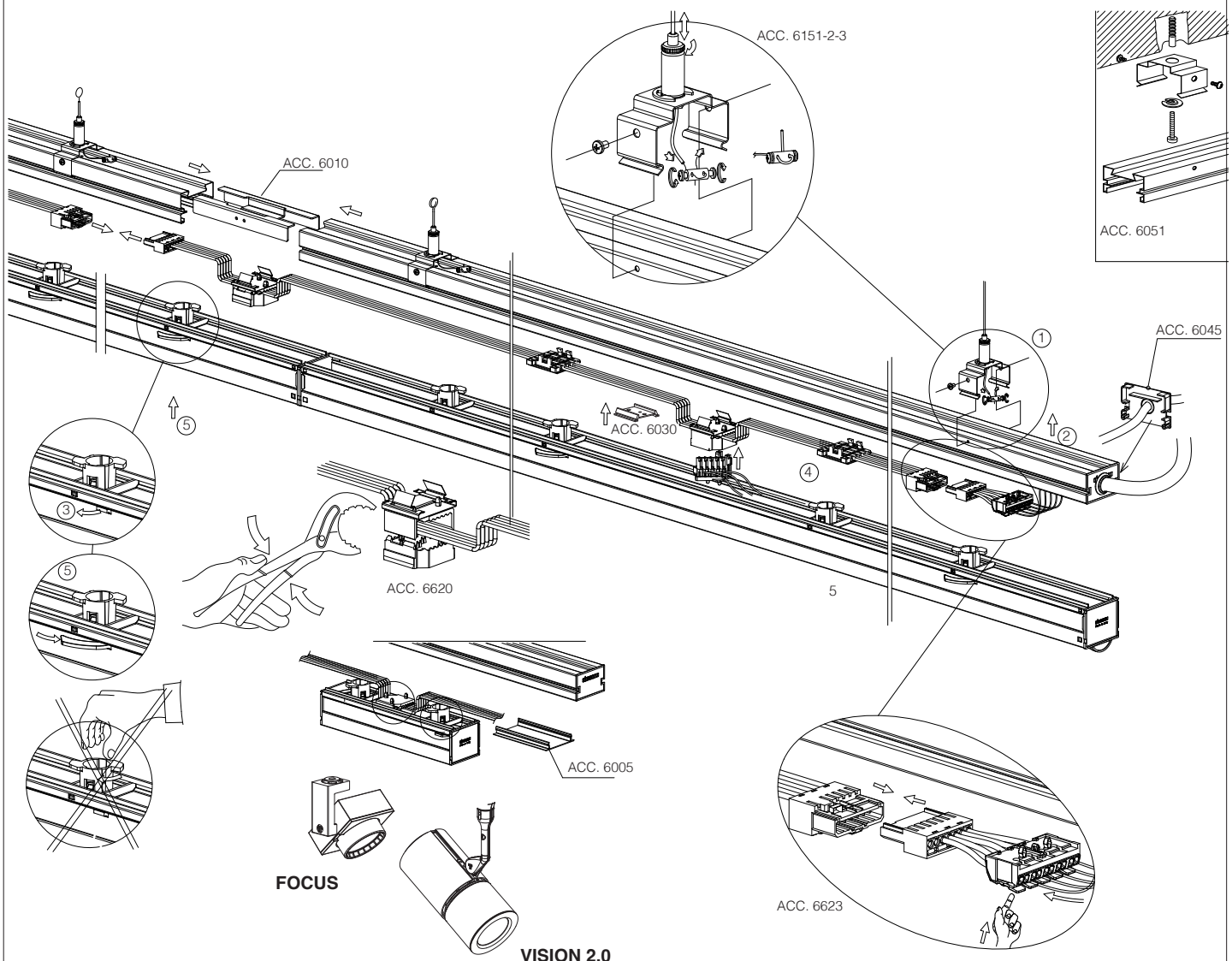

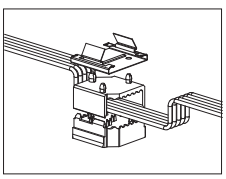

acc. 6620 insulator block		
white	5-pole	994030-00
white	7-pole	994031-00
white	11-pole	994031-00001185
To mount an extra lamp to power track art. 6021-6022-6023.		

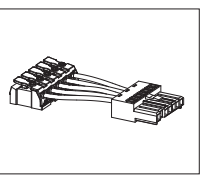

acc. 6623 power supply		
white	5-pole	994036-00
white	7-pole	994037-00
white	11-pole	994037-46001136
Always use for track power supply. Allowed lead cross-section 2.5 sqmm.		

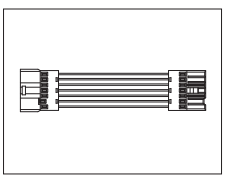

acc. 6621 electric joint		
white	5-pole	994032-00
white	7-pole	994033-00
white	11-pole	994033-46001135
To be used as a angle, cross drop-counterdrop joint to electrical connect 2 tracks art. 6021-6022-6023. Recommended for use in combination with acc. 6015/6025/6070.		

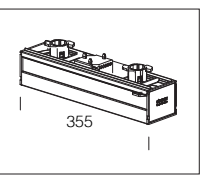

acc. 6624 insulator block cover		
white	5-pole	994038-00
white	7-pole	994039-00
white	11-pole	994044-00
To cover not used insulator block.		

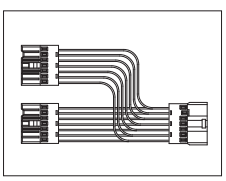

acc. 6622 T electric joint		
white	5-pole	994034-00
white	7-pole	994035-00
white	11-pole	994042-00
To be used as a T joint to electrical connect 3 tracks art. 6021. Recommended for use in combination with acc. 6020.		

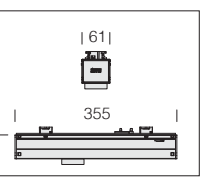

acc. 6625 presence and light sensor *	
white	994046-00
Complete with automatic sensor that immediately sense the presence of people's movements and anyone walking past. When there is movement within the sensor's detection range, the light will remain ON. When no further movement is detected, the light will switch OFF after a pre-set time.	

** For more info, see chapter Lighting management systems and recommendations*


l'auto
E.Leclerc
HANKOOK

Possible combinations to obtain **"NOT CONTINUOUS LIGHT"** solutions with cable tracks in the standard version (2267 mm and 4534 mm) and in the ceiling lamp version (standard 2267 mm version).

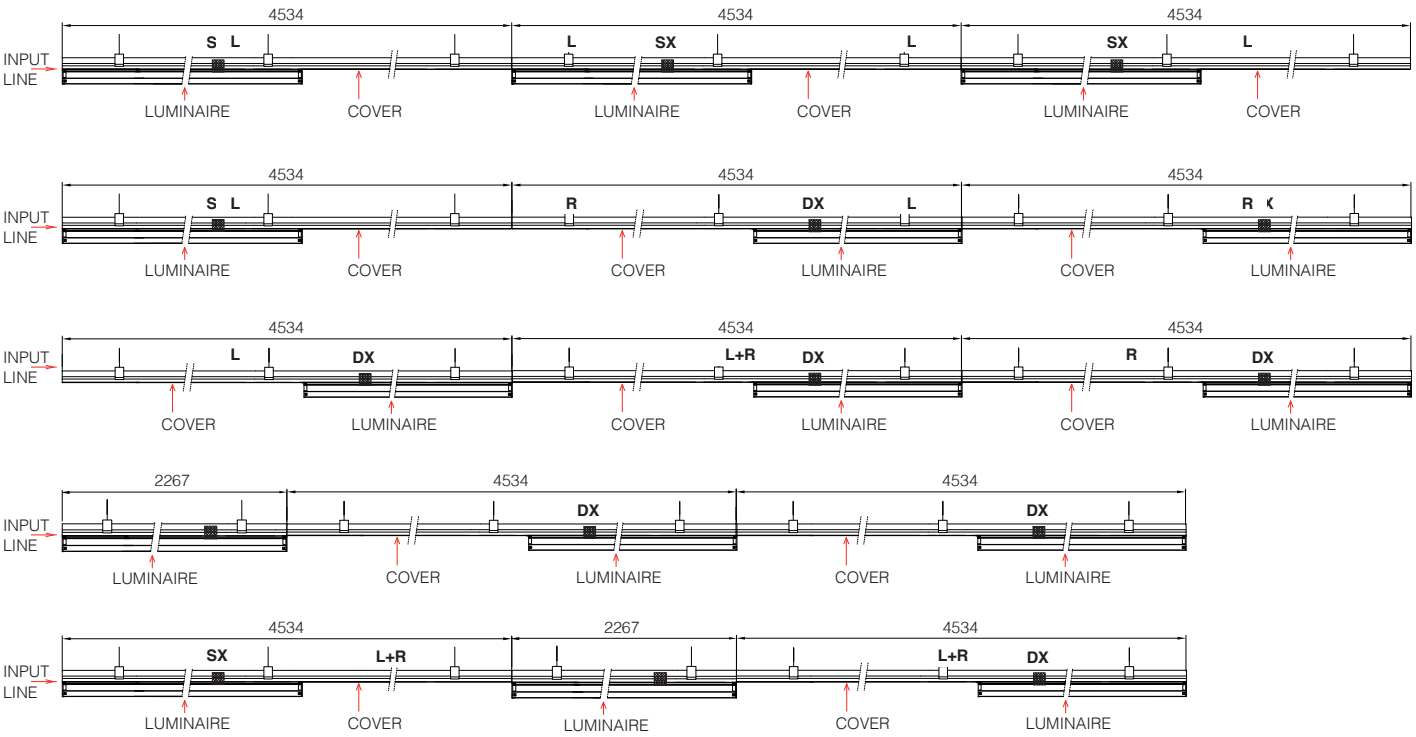

Overview of the possible combinations to obtain **"ALL LIGHT" solutions** with cable tracks in the standard version (2267 mm and 4534 mm) and in the ceiling lamp version (standard 2267 mm version).

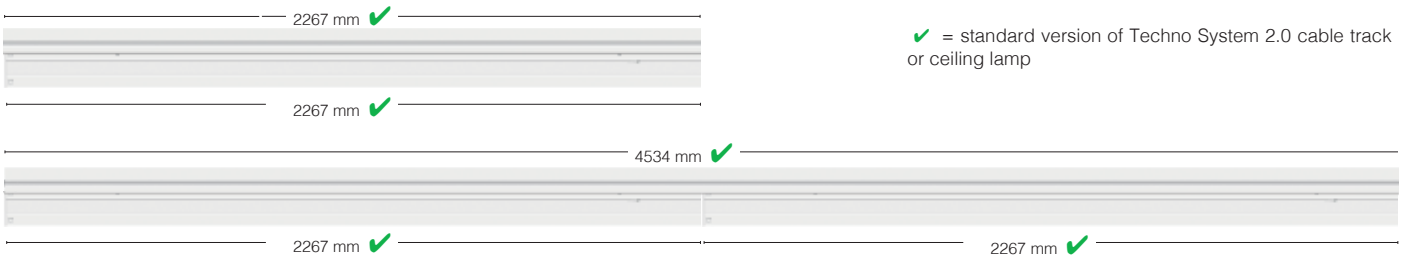

✔ = standard version of Techno System 2.0 cable track or ceiling lamp

The following compositions require all the parts left exposed by the fixtures to be covered with Acc. 6005 that can be easily cut out to the desired size.

Thanks to the dedicated support box, the system can fit Fosnova spotlights from the **Focus SLIM** (up to 23W-2400lm) **and Vision 2.0** (up to 53W-5500lm).

✔ = standard version of Techno System 2.0 cable track or ceiling lamp

✍ = custom version of Techno System 2.0 (575mm - 857mm - 1139mm - 1703mm - 3395mm) cable track or ceiling lamp

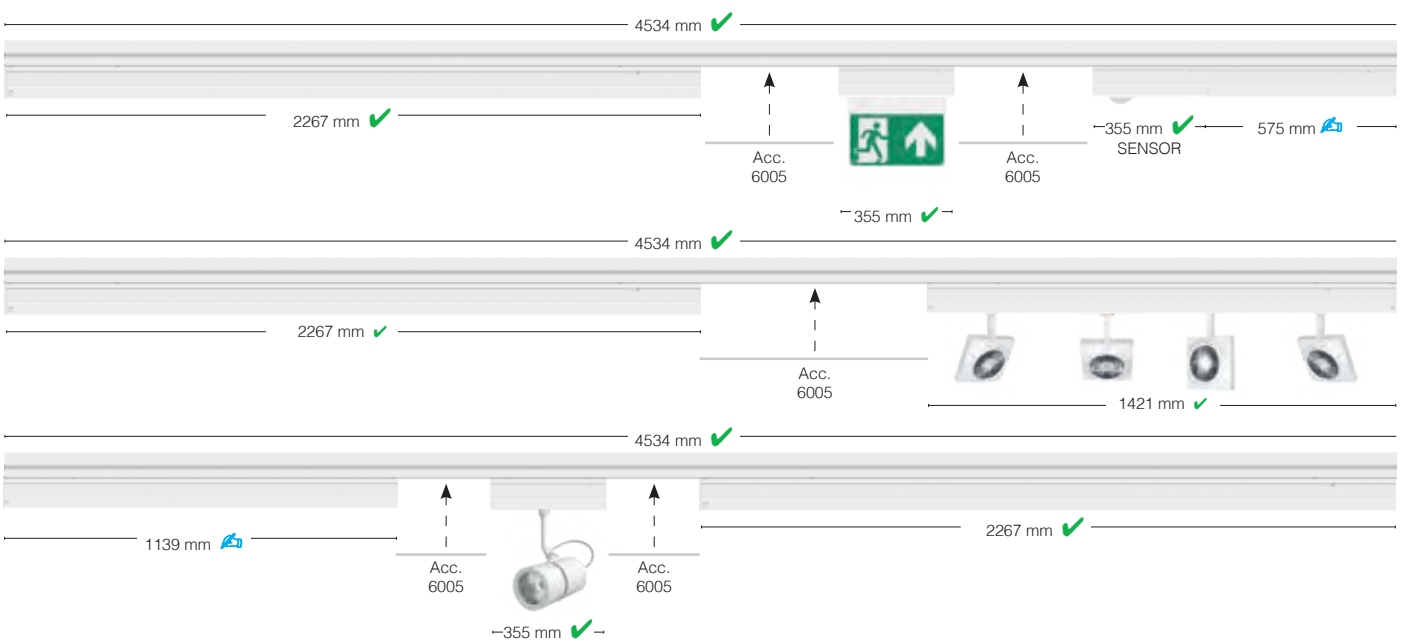





wide-beam (with semi-spherical diffuser)

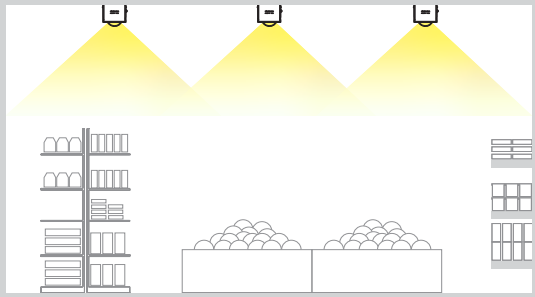

IP40 IK07

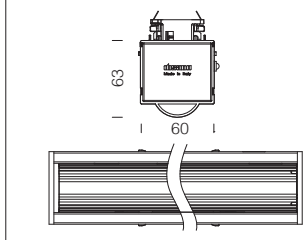

Versions with wide-beam distribution
Fixtures with wide-beam lighting distributions are suited for illuminating shelves in supermarkets or for aisles displaying fresh fruits and vegetables or generally any area that requires constant and uniform lighting.

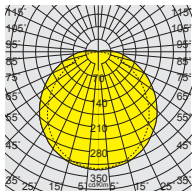

6616 Techno System					
			CLD		LUMEN OUTPUT (tq= 25 °C)
LED	weight	L		W tot	K - ølm - CRI
LED	1.50	1421	133054-00	**29**	4000K - 4761lm - CRI 80
	1.70		133055-00	**58**	4000K - 9523lm - CRI 80
Available **EM** (**sub-code -07**) and **DIMM DALI** (**sub-code -0041**) versions.					



60° wide-beam optics

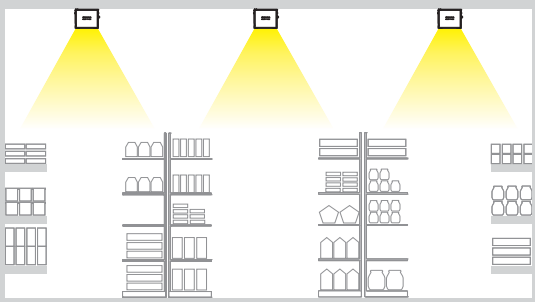

IP40 IK07

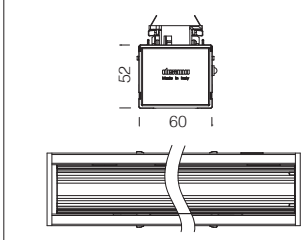

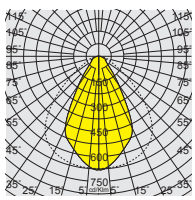

6615 Techno System					
			CLD		LUMEN OUTPUT (tq= 25 °C)
LED	weight	L	code	W tot	K - ølm - CRI
LED	1.50	1421	133044-00	**29**	4000K - 4930lm - CRI 80
	1.70		133045-00	**58**	4000K - 9861lm - CRI 80
Available **EM** (**sub-code -07**) and **DIMM DALI** (**sub-code -0041**) versions.					



IP40IK07

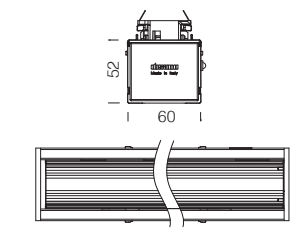

90° symmetric optics

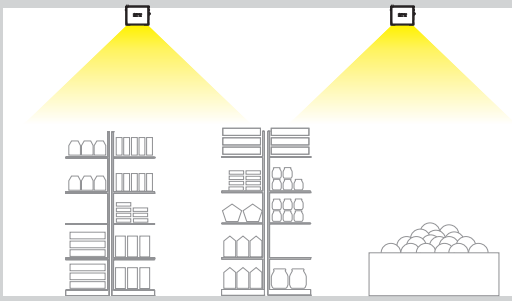



6611 Techno System					
			CLD		LUMEN OUTPUT (tq= 25 °C)
LED	weight	L	code	W tot	K - ølm - CRI
LED	1.50	1421	133005-00	**29**	4000K - 4924lm - CRI 80
	1.70		133006-00	**58**	4000K - 9849lm - CRI 80
Available **EM** (**sub-code -07**) and **DIMM DALI** (**sub-code -0041**) versions.					

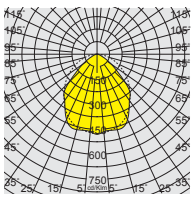

IP40IK07

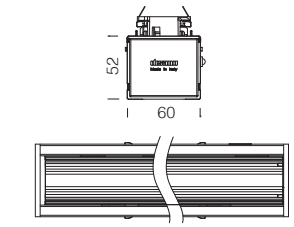

30°x80° elliptic optics

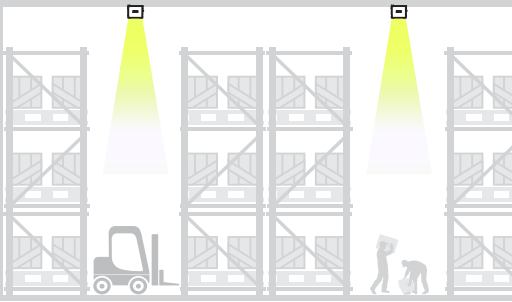



6614 Techno System					
			CLD		LUMEN OUTPUT (tq= 25 °C)
LED	weight	L	code	W tot	K - ølm - CRI
LED	1.50	1421	133034-00	**29**	4000K - 4899lm - CRI 80
	1.70		133035-00	**58**	4000K - 9799lm - CRI 80
Available **EM** (**sub-code -07**) and **DIMM DALI** (**sub-code -0041**) versions.					

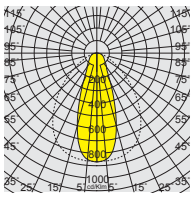

30°x80° elliptic optics suited for illuminating retail stores with tall shelves, where light must spread out evenly and efficiently.





25° asymmetric optics

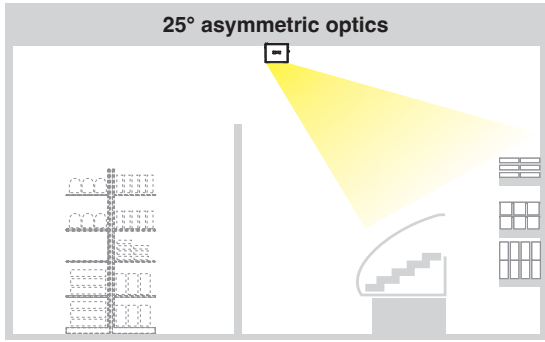

IP40 IK07

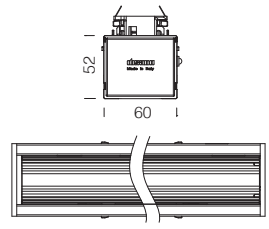

25° asymmetric optics photometric distribution is studied for the furniture of retail areas where shelves are arranged laterally.

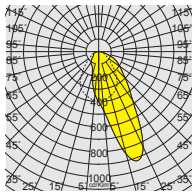

6612 Techno System					
			CLD		LUMEN OUTPUT (tq= 25 °C)
LED	weight	L	code	W tot	K - ølm - CRI
LED	1.50	1421	133014-00	**29**	4000K - 4567lm - CRI 80
	1.70		133015-00	**58**	4000K - 9128lm - CRI 80
Available **EM** (**sub-code -07**) and **DIMM DALI** (**sub-code -0041**) versions.					



25° bi-asymmetric optics

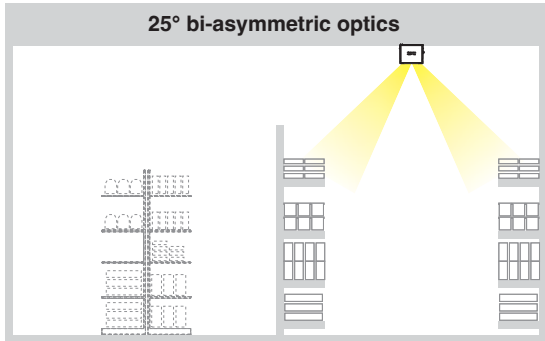

IP40 IK07

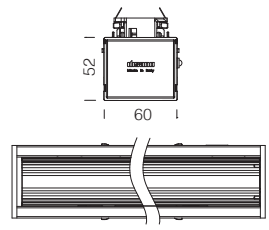

25° bi-asymmetric optics perfect for retail spaces where the lighting system must produce accent lighting on shelves and on the wares, while the lighting in the aisles is more general.

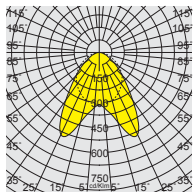

6613 Techno System					
			CLD		LUMEN OUTPUT (tq= 25 °C)
LED	weight	L	code	W tot	K - ølm - CRI
LED	1.50	1421	133024-00	**29**	4000K - 5063lm - CRI 80
	1.70		133025-00	**58**	4000K - 10125lm - CRI 80
Available **EM** (**sub-code -07**) and **DIMM DALI** (**sub-code -0041**) versions.					



IP40IK07

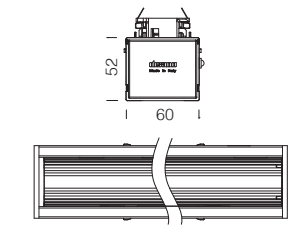

UGR optics

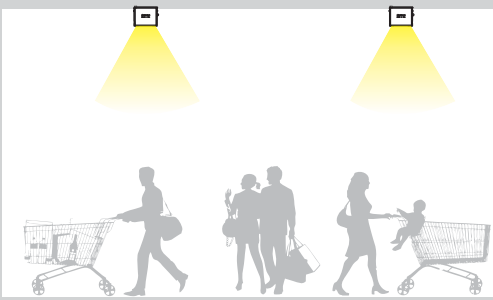



6606 Techno System - UGR							
			CLD	CLD E	CLD D-D (DALI)		LUMEN OUTPUT (tq= 25 °C)
LED	peso	L	code	code	code	W tot	K - ølm - CRI
LED	1.50	1421	133062-60	133062-6007	133062-6041	**33**	4000K - 4821lm - CRI 80
LED *	1.70		133063-60	133063-6007	133063-6041	**65**	4000K - 9704lm - CRI 80

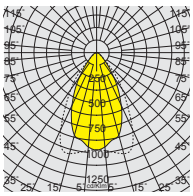

The UGR (unified glare rating) is an international unified measure developed by the CIE (Commission International de l'Eclairage) to assess the direct glare generated by a lighting system. The European standard regulating the lighting of indoor work places (**UNI-EN 12464-1**) recommends a specific UGR value for different applications ranging between **10 and 30**; **the lower the UGR value, the lower the glare**. The exact value of this index differs by project type because it depends on the position of the luminaires, room characteristics (dimensions, reflections) and on the point of observation of viewers.

Classification of UGR values by applications		
UGR	≤ 16	Very demanding applications (technical drawings)
	≤ 19	Offices and schools (reading, business meetings, computer work)
	≤ 22	Industrial applications, craftsmen
	≤ 25	Transit areas
	> 28	High glare

Below are some examples of industrial environments requiring the installation of fixtures with **UGR<22** in compliance with standard **UNI-EN 12464-1**:
- General areas inside buildings – storage areas
- Industrial and manufacturing activities
- Chemical and pharmaceutical industry
- Mechanical, electronic and electro-technical industry
- Paper mills



IP20IK08

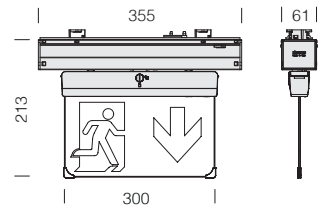



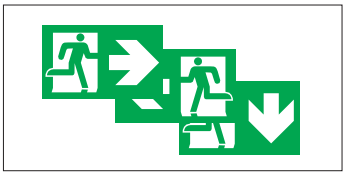

acc. 470 labels	
right out	995150-00
left out	995151-00
down out	995152-00
Pictograms available and visible up to 40 m. UNI EN1838. Bag containing 2 pieces	

L80 B20 50.000h

EM S.A.

EM TEST

RG0

Housing: polycarbonate, shatterproof, V2 self-extinguishing, UV stabilised.

Standard versions: self-test button providing real-time status information; autonomy ≥ 3 h with recharging in ≤ 24 h.

6610 Safety Flag S.A.						
		CLD CEM-L				LUMEN OUTPUT (tq= 25 °C)
LED	colour	weight	code	autonomy	W tot	K - ølm - CRI
LED	white	1.00	133100-00	**3h**	4	6500K - **320lm** - CRI 80
Version for Techno System; EM wattage: 1W max. DALI 2 version available on request.						

TECHNO SYSTEM LED DIRECTLY MOUNTED TO THE CEILING

IP40IK07

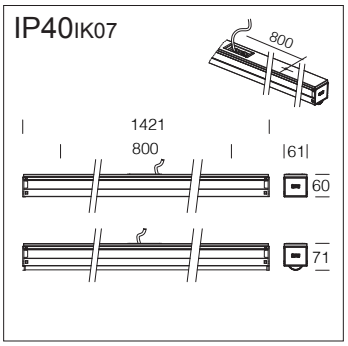

All versions of the **Techno System** LED series with subcode **-42** are equipped with a special upper cover for the direct mounting to the ceiling; this allows the installation of the ceiling lamp without using the cable track.



Techno System fixtures with subcode -42



REPLACE YOUR RAPID SYSTEM FL FIXTURES WITH THE NEW TECHNO SYSTEM LED

All **Techno System LED** fixtures with **subcode -0059** are designed to directly replace Rapid System FL ceiling lamps. The special mounting clip will make relamping quick and easy. For application on existing art. 6000 power tracks with the presence of through-cables, we recommend using acc. 6030 as a cable holder or cable clip.

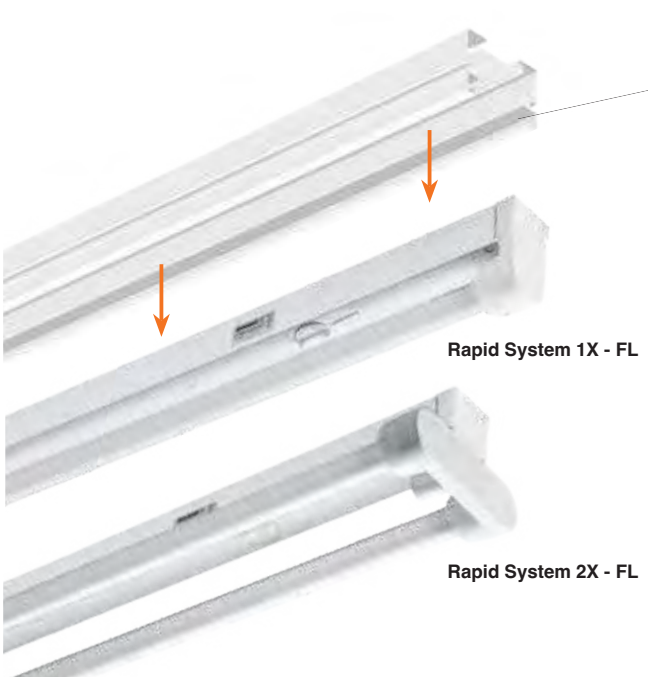

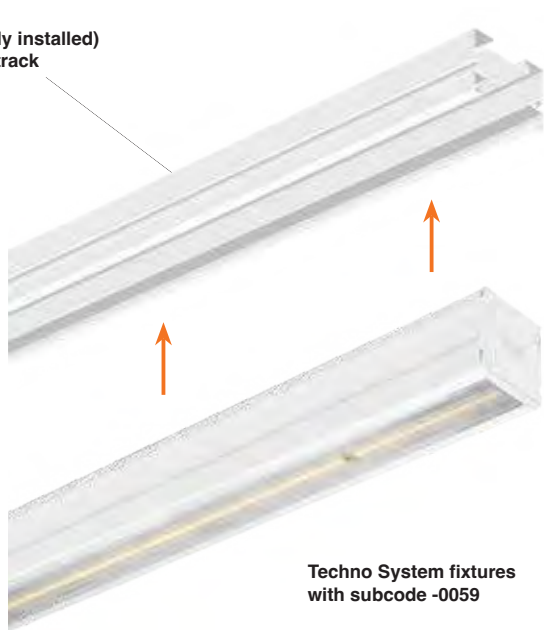

Techno System fixtures with subcode -0059

Track housing: painted rolled steel with rounded edges for hand safety and galvanized steel previously stove-enamelled with a UV-stabilised, anti-yellowing white polyester resin applied after phosphate treatment; supplied with cable 1,5 mm².

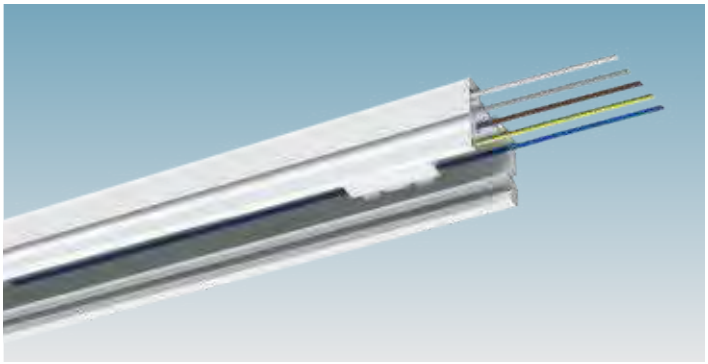

IP40IK08

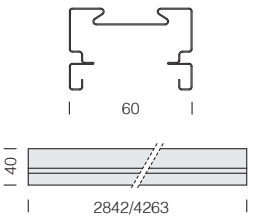

The **power track 6001** is available in two standard lengths, 2842 mm and 4263 m. These lengths correspond exactly to the length of 2 or 3 linear luminaires, so basically the track is made to be used with 2 or 3 connectors depending on the length chosen.

6001 power track - for continuous line

			S	
size	colour	conductors	weight	code
2842	white	**5-pole**	3.25	132960-00
		7-pole		132961-00
		11-pole		13296146011138
4263	white	**5-pole**	4.70	132965-00
		7-pole		132966-00
		11-pole		13296600010923

Designed to allow the quick continuous line mounting of luminaires of the Techno System series.

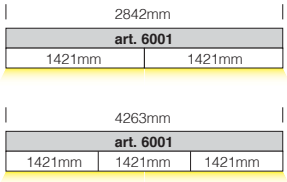

The **power track 6002** is designed to be used with a lower number of connectors (1 or 2) for applications where continuous line mounting is not required. It will ensure aesthetic uniformity (due to the absence of unused connectors) and increase savings.

6002 power track - non-continuous line

			S		
size	colour	conductors	weight	**1 connector (L)** code	**1 connector (R)** code
2842 1 connector	white	**5-pole**	3.50	13296046000200	13296046002265
		7-pole		13296100002265	13296100002021
		11-pole		13296100002266	13296100002267
				2 connectors (L+R) code	**1 connector (CENTRAL)** code
4263 1/2 connectors	white	**5-pole**	4.90	13296546000199	13296546002265
		7-pole		13296600002022	13296600002023
		11-pole		13296600002025	13296600002268

Designed to allow the quick non-continuous line mounting of luminaires of the Techno System series.

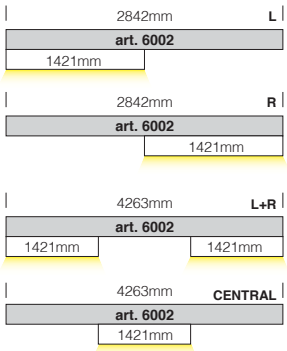

The **power track 6003** is made to be used without any fixed connector. In this case luminaires are mounted with accessory 6620 (mobile disconnector), by positioning any number of luminaires anywhere along the track. Further lengths and special configurations can be ordered after verification upon the buyer's request.

6003 power track - without connector

			S	
size	colour	conductors	weight	code
2842	white	**5-pole**	3.30	132970-00
		7-pole	3.50	132971-00
		11-pole	3.80	132972-00
4263	white	**5-pole**	4.50	132975-00
		7-pole	5.20	132976-00
		11-pole	5.40	132977-00

Designed to allow the mounting of luminaires of the Techno System series anywhere along the track. Purchase acc. 6620 separately.

Detail of fixed connector position with power track 6001 or 6002

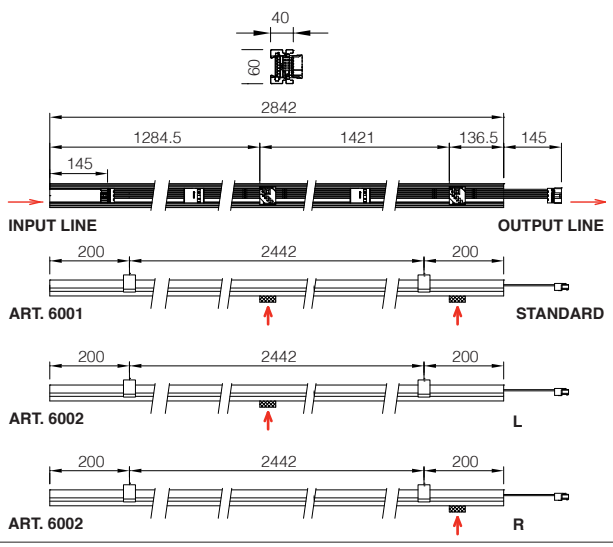

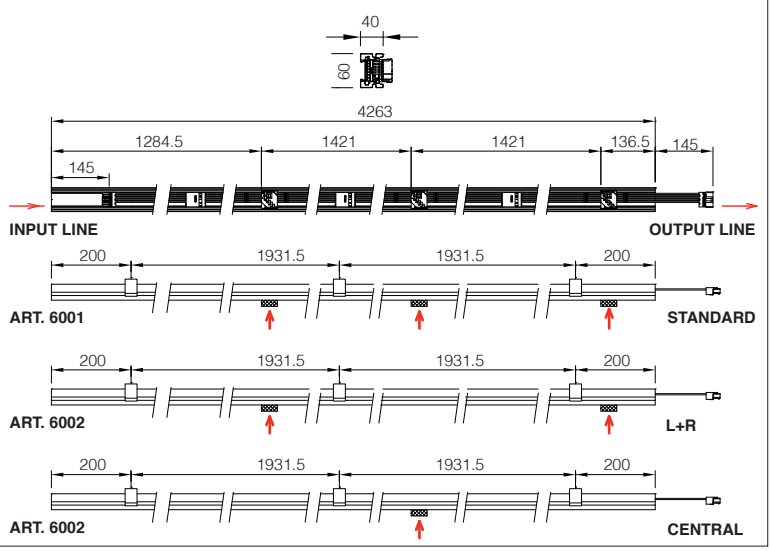

Frame structure for the creation of continuous row of Techno System fixtures or in combination with other products (see table). Simple and quick mounting as a ceiling or a suspension fixture thanks to the wide range of accessories. The power track is designed to house **5-pole** or **7-pole** terminal block (the latter to be used for the **EM**ergency or **DIMM**able **DALI** versions) or **11-pole** blocks (the latter to be used for the **EM**ergency and **DIMM**able **DALI** versions) with rapid connectors.

Mounting Techno System fixture on power track art. 6001 - 6002 - 6003

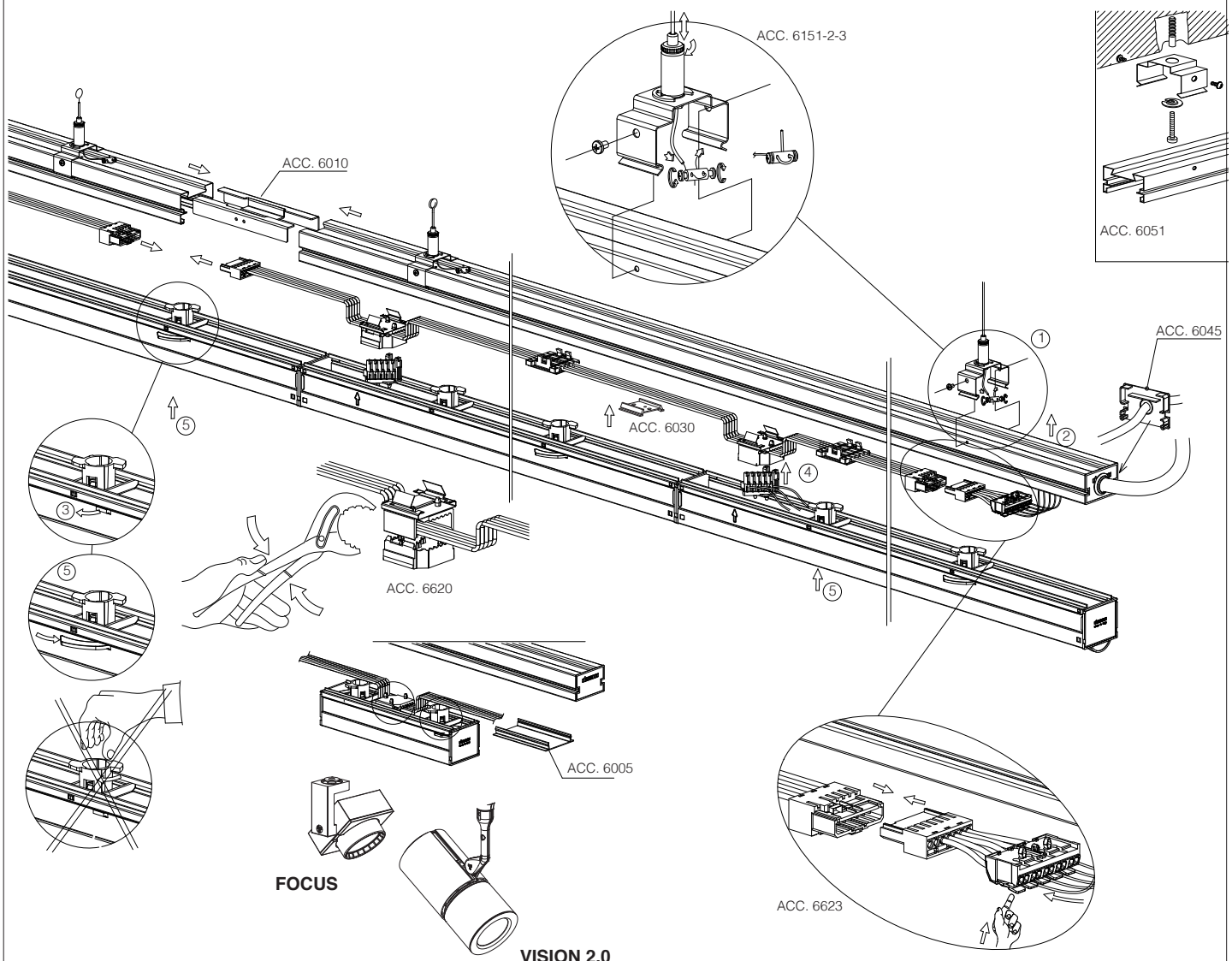

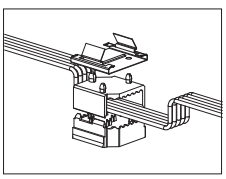

acc. 6620 insulator block		
white	5-pole	994030-00
white	7-pole	994031-00
white	11-pole	994031-00001185
To mount an extra lamp to power track art. 6001-6002-6003.		

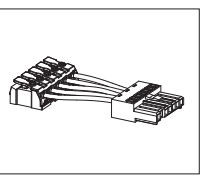

acc. 6623 power supply		
white	5-pole	994036-00
white	7-pole	994037-00
white	11-pole	994037-46001136
Always use for track power supply. Allowed lead cross-section 2.5 sqmm.		

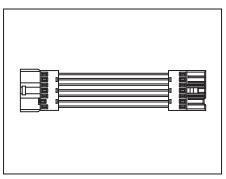

acc. 6621 electric joint		
white	5-pole	994032-00
white	7-pole	994033-00
white	11-pole	994033-46001135
To be used as a angle, cross drop-counterdrop joint to electrical connect 2 tracks art. 6001-6002-6003. Recommended for use in combination with acc. 6015/6025/6070.		

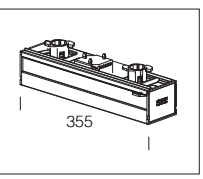

acc. 6624 insulator block cover		
white	5-pole	994038-00
white	7-pole	994039-00
white	11-pole	994044-00
To cover not used insulator block.		

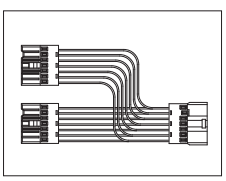

acc. 6622 T electric joint		
white	5-pole	994034-00
white	7-pole	994035-00
white	11-pole	994042-00
To be used as a T joint to electrical connect 3 tracks art. 6001. Recommended for use in combination with acc. 6020.		

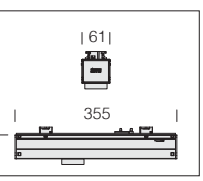

acc. 6625 presence and light sensor *	
white	994046-00
Complete with automatic sensor that immediately sense the presence of people's movements and anyone walking past. When there is movement within the sensor's detection range, the light will remain ON. When no further movement is detected, the light will switch OFF after a pre-set time.	

** For more info, see chapter Lighting management systems and recommendations*

Possible combinations to obtain **"NOT CONTINUOUS LIGHT"** solutions with cable tracks in the standard version (2842 mm and 4263 mm) and in the ceiling lamp version (standard 1421 mm versions).

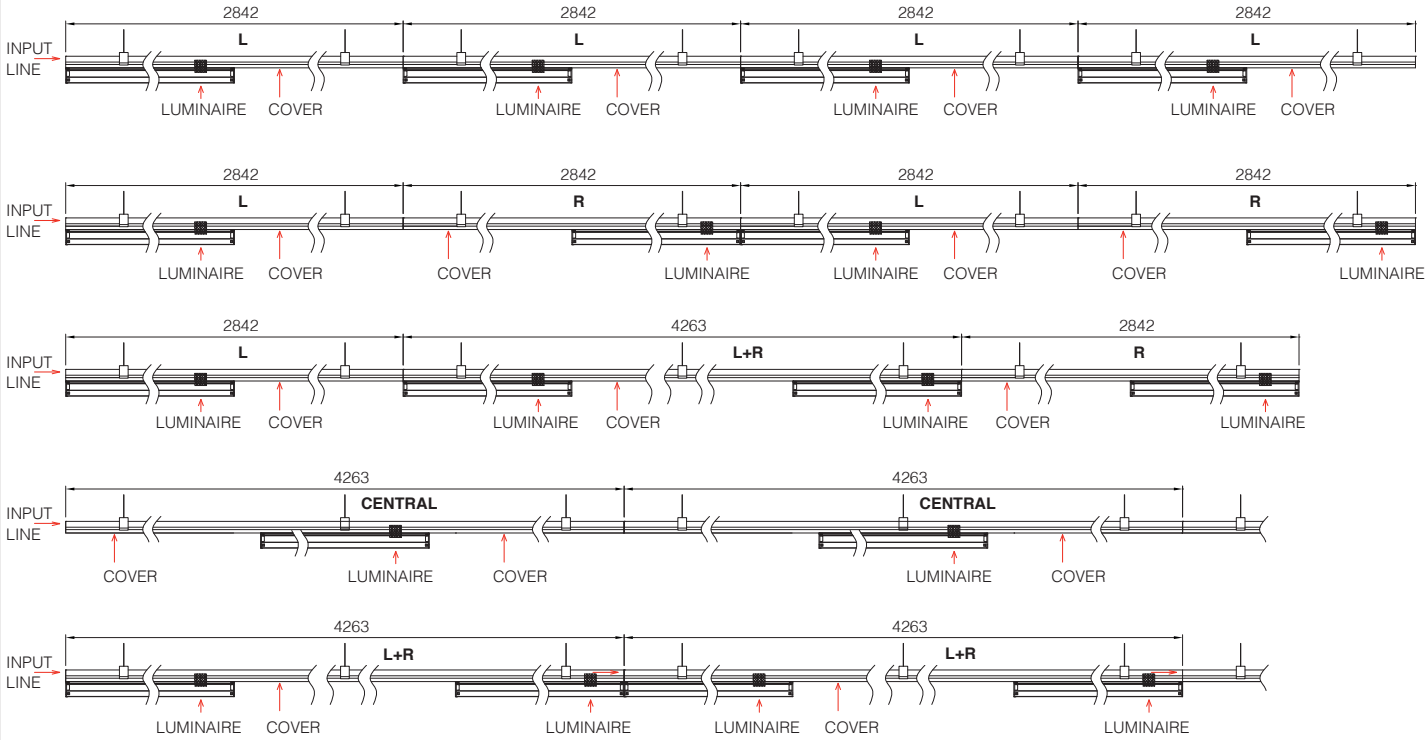

Overview of the possible combinations to obtain **"ALL LIGHT" solutions** with cable tracks in the standard version (2842 mm and 4263 mm) and in the ceiling lamp version (both standard 1421 mm version and custom size version).

✔ = standard version of Techno System cable track or ceiling lamp

= custom version of Techno System cable track or ceiling lamp

Size		
	✔ standard ceiling lamp	ceiling lamp on request
Techno System	1421 mm	575 mm
		857 mm
		1139 mm
		1703 mm
		2267 mm
		3395 mm
Power track art. 6001	2842 mm	2853 mm
	4263 mm	4274 mm

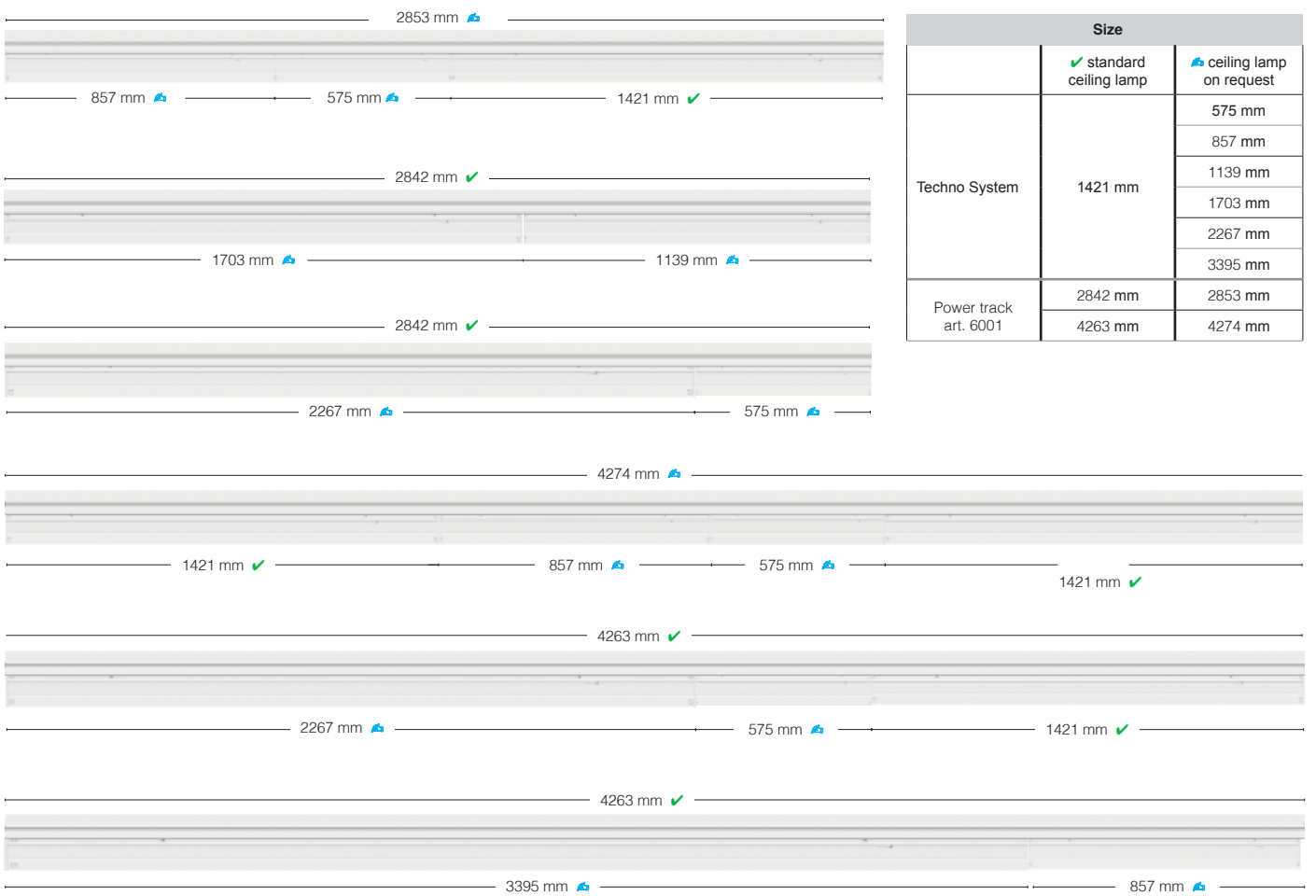



The following compositions require all the parts left exposed by the fixtures to be covered with Acc. 6005 that can be easily cut out to the desired size.
Thanks to the dedicated support box, the system can fit Fosnova spotlights from the **Focus** (up to 26W-2700lm) **and Vision 2.0** (up to 53W-5500lm).

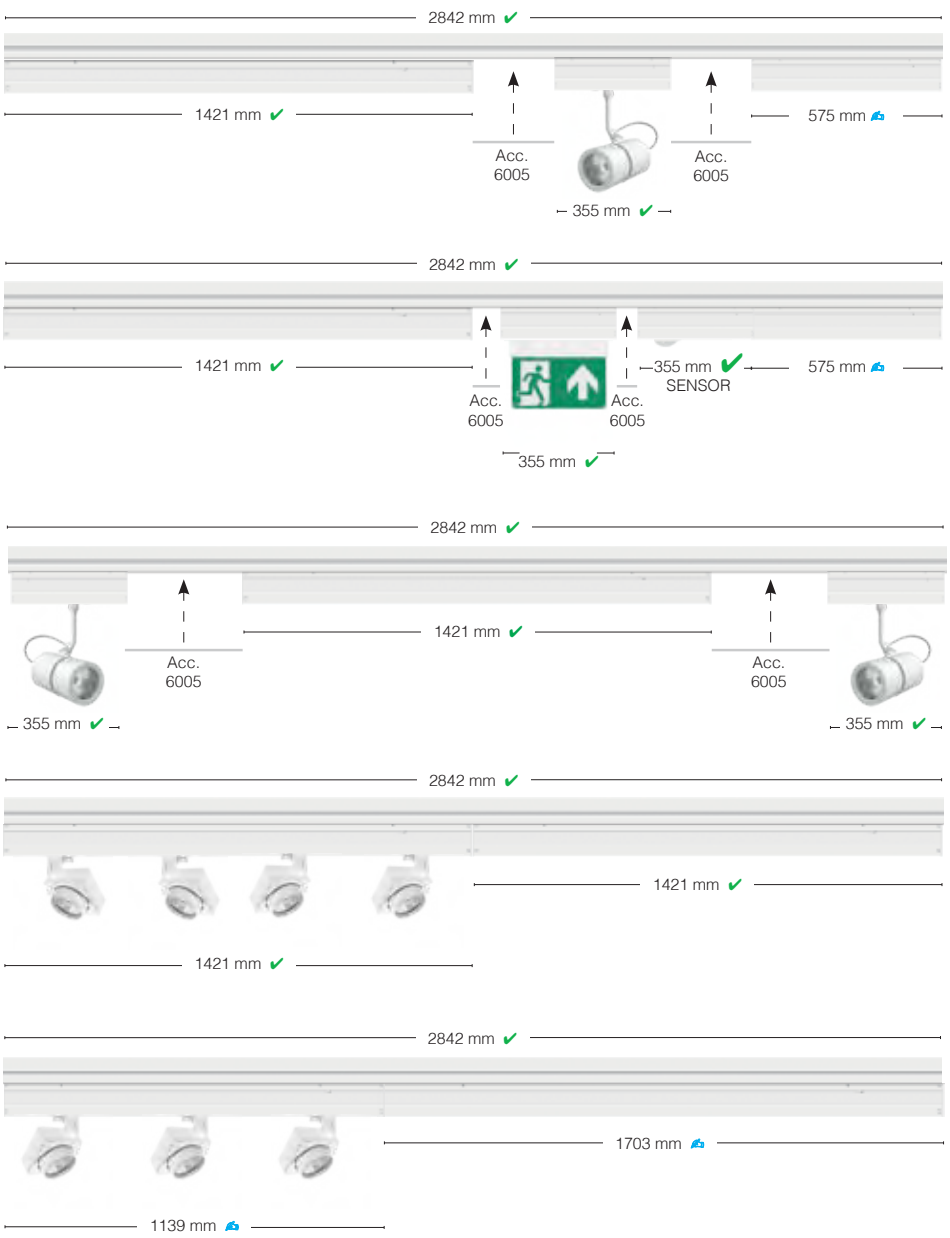

Absorbed power (W tot= LED+driver) with reference to the lengths of the ceiling lamps:

✔ standard: 1421 mm
upon request: 575 mm - 857 mm - 1139 mm - 1703 mm - 2267 mm

mm	Art.	W tot
1421 mm standard ✔	6611	29 W
		58 W
	6612	29 W
		58 W
	6613	29 W
		58 W
	6614	29 W
		58 W
	6615	29 W
		58 W
	6616	29 W
		58 W
	6606	33 W
		65 W
575 mm	6611	11 W
		23 W
	6612	11 W
		23 W
	6613	11 W
		23 W
	6614	11 W
		23 W
	6615	11 W
		23 W
	6616	11 W
		23 W
857 mm	6611	17 W
		35 W
	6612	17 W
		35 W
	6613	17 W
		35 W
	6614	17 W
		35 W
	6615	17 W
		35 W
	6616	17 W
		35 W
1139 mm	6611	23 W
		46 W
	6612	23 W
		46 W
	6613	23 W
		46 W
	6614	23 W
		46 W
	6615	23 W
		46 W
	6616	23 W
		46 W
1703 mm	6611	35 W
		70 W
	6612	35 W
		70 W
	6613	35 W
		70 W
	6614	35 W
		70 W
	6615	35 W
		70 W
	6616	35 W
		70 W
2267 mm	6611	46 W
		92 W
	6612	46 W
		92 W
	6613	46 W
		92 W
	6614	46 W
		92 W
	6615	46 W
		92 W
	6616	46 W
		92 W
3395 mm	6611	69 W
		138 W
	6612	69 W
		138 W
	6613	69 W
		138 W
	6614	69 W
		138 W
	6615	69 W
		138 W
	6616	69 W
		138 W


DELICATESSEN
xtra deals

GENERAL CHARACTERISTICS

Highlighting the freshness, colours and appearance of the foods on display is fundamental to improve the shopping experience and increase the customer's purchase intention. The **LED** sources especially designed for the **FOOD** sector are the best solution to effectively illuminate the foods on display, such as: **MEAT, FISH, FRUIT, VEGETABLES, CHEESE, BREAD AND PASTRY.**

The range of products presented for the FOOD retailing sector ensures incredible results for any type of food product. Bright, lively and brilliant colours are guaranteed by LED lights combined with high colour renderings and dedicated colour spectrums.
This result is also achieved with high performance optics to further improve energy-efficiency and reduce consumption. LEDs are manufactured to have a low impact on the environment and ensure the correct energy classification of lighting fixtures.

LED technology offers over 50,000 hours of practically maintenance-free operation; furthermore LED sources are well suited to ensure food safety, because they do not emit infrared and ultraviolet radiations that have negative and degenerative effects on the food, accelerating the decay of the organoleptic properties of the product.

CATEGORY		FEATURES
	**Meat and meat products**	Enhancing the red colour of meat adds a fresher look to the products.
	**Bread and bakery**	Warm light enhances the gold hue of bakery products.
	**Cheese and dairy products**	White light is also suitable for fresh cheese and attracts buyers.
	**Fruit and vegetables**	Bright white light enhances the colour of fresh vegetables, while warm colours make fruit look more attractive.
	**Fish and shellfish**	Cold white light reflecting on the ice is perfect for fresh fish, adding to it the appearance of fish just out of the water.

Bins are colour delimitations of the LED source. New generation products like **FOOD LED** have a colour group area and an innovative position on the virtual white curve (BBL). Slightly higher costs mean increased lighting quality, more saleable wares and greater visual comfort.

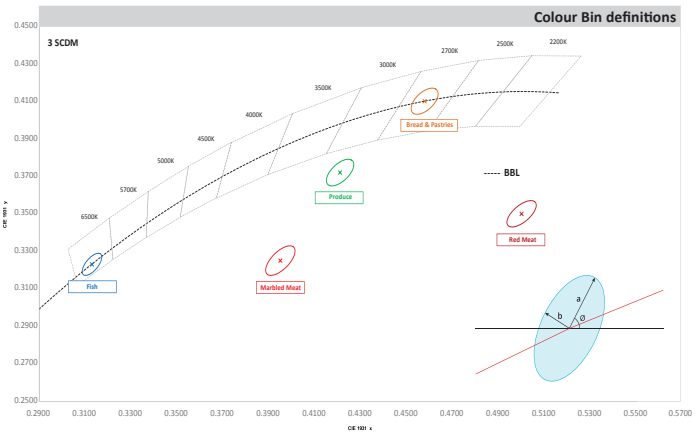

PRODUCT	COLOUR SPACE	CENTER POINT [1] (cx, cy)	MAJOR AXIS, a	MINOR AXIS, b	ELLIPSE ROTATION ANGLE, θ
Produce	Single 3-step MacAdam ellipse	(0.4210, 0.3720)	0.00834	0.00408	53.20°
Red Meat	Single 3-step MacAdam ellipse	(0.5000, 0.3500)	0.00862	0.00397	49.30°
Marbled Meat	Single 3-step MacAdam ellipse	(0.3950, 0.3250)	0.00939	0.00402	53.70°
Fish	Single 3-step MacAdam ellipse	(0.3130, 0.3230)	0.00669	0.00285	58.60°
Bread & Pastries	Single 3-step MacAdam ellipse	(0.4578, 0.4101)	0.00810	0.00420	53.70°

Graphic representation of BINNING: choice of LEDs to use in relation to their colour temperature.

UPON REQUEST

Versions with special LEDs for the **FOOD** industry (*Red Meat, Marbled Meat, Fish, Bread &, Pastries and Produce*).



MEAT
subcode -00000036



BREAD - CHEESE
subcode -00000034



FRUIT - VEGETABLE
subcode -00000035



FISH
subcode -00000037

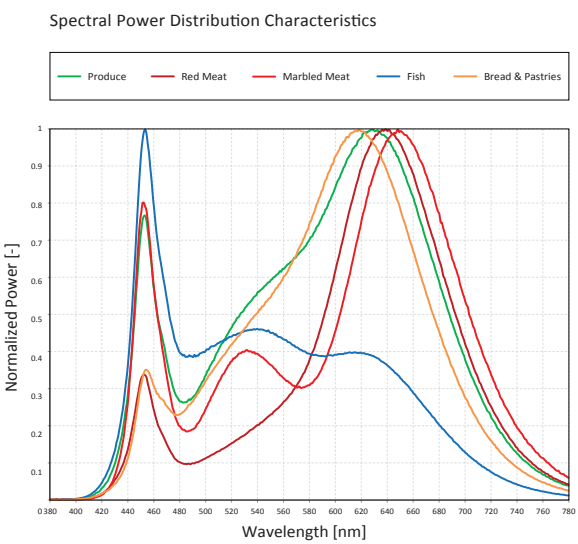

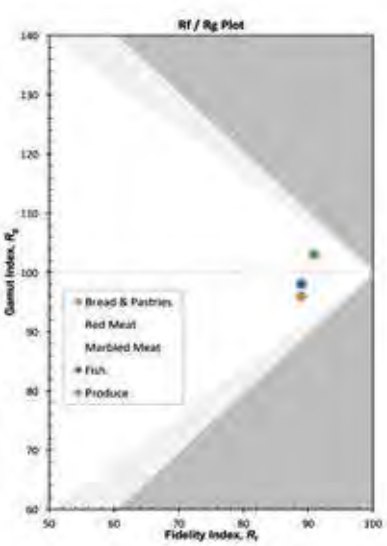

Measure

Fidelity Index - Rf: analogous to CIE Ra (CRI). Characterizes the average color shift of the 99 CES to characterize the overall level of similarity between the test source and reference illuminant. Values range from 0 to 100.
Gamut Index - Rg: compares the area enclosed by the average chromaticity coordinates in each of 16 hue bins to characterize the average saturation level of the test source compared to the reference illuminant. A neutral score is 100, with values greater than 100 indicating an increase in saturation and values less than 100 indicating a decrease in saturation. The range in values grows as fidelity decreases.
Rf and Rg form a complimentary two-measure system, which can be plotted to visually illustrate the tradeoff between fidelity and saturation. The blue points represent real sources, with the shaded areas approximating combinations that are not possible for sources on the blackbody locus (light gray) or not classified as white light (dark gray).



GENERAL CHARACTERISTICS

Fixture housing: galvanized steel previously stove-enamelled with UV-stabilised white polyester resin; rounded edges to prevent cutting; polycarbonate end caps.

Standard supply: nylon fastening pawl.

LED module: support in natural anodized extruded aluminium. Micro-fluted diffuser in methacrylate.

Upon request: 3000K versions, DIMM 1-10V and DALI.

LED: power factor ≥0.95.
Luminous flux maintenance 80%: 80.000h (L80B20).
Luminous flux maintenance 90%: 50.000h (L90B10).
Photobiological safety class: exempt group.



The LED tubes can be rotated to adjust light and therefore optimise the performance of optic accessories.

RAPID SYSTEM ACCESSORIES

IP40IK08

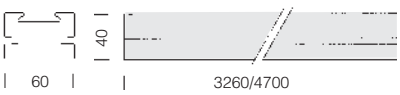

Provision for cable management



For application on existing art. 6000 power tracks with the presence of through-cables, we recommend using acc. 6030 as a cable holder or cable clip.

6000 Rapid system - track			
		S	
length	colour	weight	code
3260	white	3.25	132900-00
4700	white	4.70	132923-00
Designed to be quickly attached to the Rapid System series luminaires.			

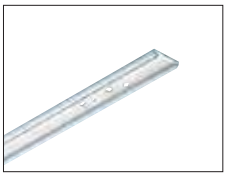

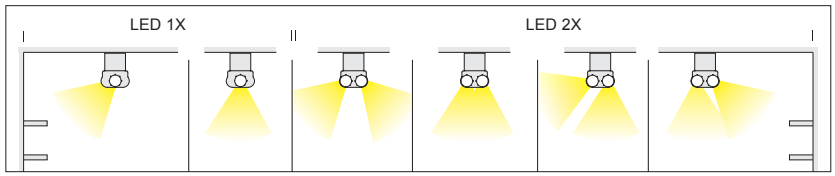

acc. 6405 upper cover	
1x/2x - 628mm	237603-46
1x - 1186mm	237617-00
1x - 1486mm	237613-00
2x - 1186mm	237624-00
2x - 1486mm	237625-00
White steel. For ceiling mounting.	

6402 + 6412

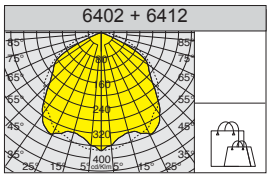





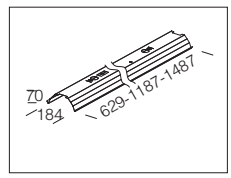

acc. 6412 wide-beam	
L=629	237729-00
L=1187	237730-00
L=1487	237731-00
Polished matt gloss aluminium 99.85, anodized 2µ.	

6402 + 6413

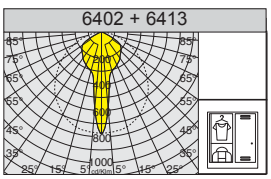





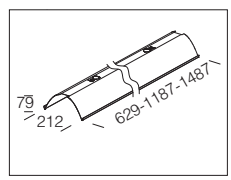

acc. 6413 narrow-beam one/lamp	
L=629	237732-00
L=1187	237733-00
L=1487	237736-00
Polished high-gloss aluminium 99.85, anodised 2µ.	

6502 + 6414

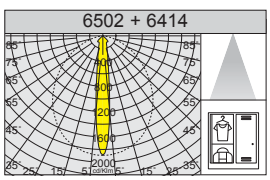

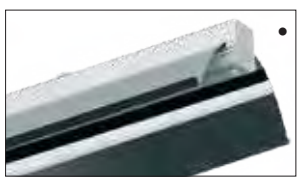



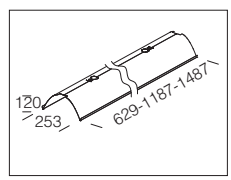

acc. 6414 narrow-beam two-lamp	
L=629	237766-00
L=1187	237764-00
L=1487	237765-00
Polished high-gloss aluminium 99.85, anodised 2µ.	

6402 + 6411

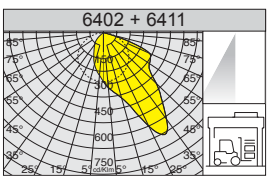





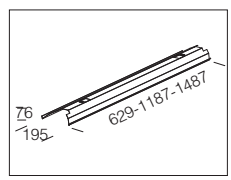

acc. 6411 asymetric reflector	
L=629	237623-00
L=1187	237619-00
L=1487	237622-00
Polished high-gloss aluminium 99.85, anodised 2µ.	

• = application examples

IP40IK07

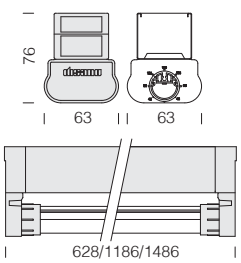



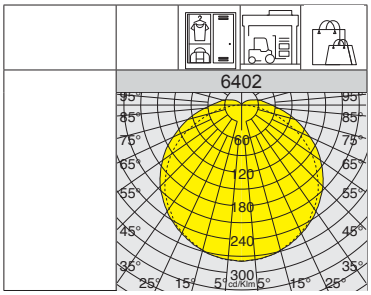

L80 B20 80.000h

L90 B10 50.000h

RG0

U.V.

EM S.A.

SUSPENSION

6402 Rapid System - 1x

		CLD			CLD E				LUMEN OUTPUT (tq= 25 °C)
LED	colour	weight	L	code	weight	L	code	W tot	K - ølm - CRI
LED 1x	white	1.00	628	237521-00				**14**	4000K - 1975lm - CRI>80
		1.10	1186	237522-00	1.80	1186	237522-07	**28**	4000K - 3951lm - CRI>80
		1.40	1486	237523-00	2.00	1486	237523-07	**34**	4000K - 4942lm - CRI>80

IP40IK07

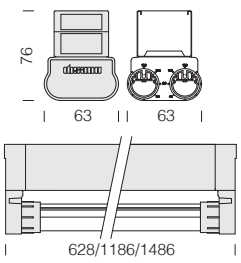



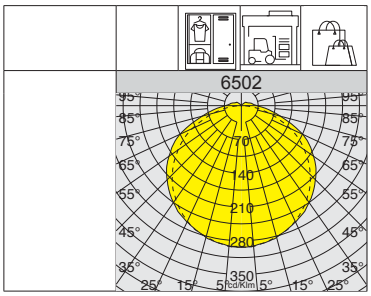

L80 B20 80.000h

L90 B10 50.000h

RG0

U.V.

EM S.A.

6502 Rapid System - 2x

		CLD			CLD E				LUMEN OUTPUT (tq= 25 °C)
LED	colour	weight	L	code	weight	L	code	W tot	K - ølm - CRI
LED 2x	white	1.00	628	237541-00				**28**	4000K - 3846lm - CRI>80
		1.10	1186	237542-00	1.80	1186	237542-07	**56**	4000K - 7363lm - CRI>80
		1.40	1486	237543-00	2.00	1486	237543-07	**68**	4000K - 9617lm - CRI>80

ACCESSORY FOR SUSPENSION MOUNTING

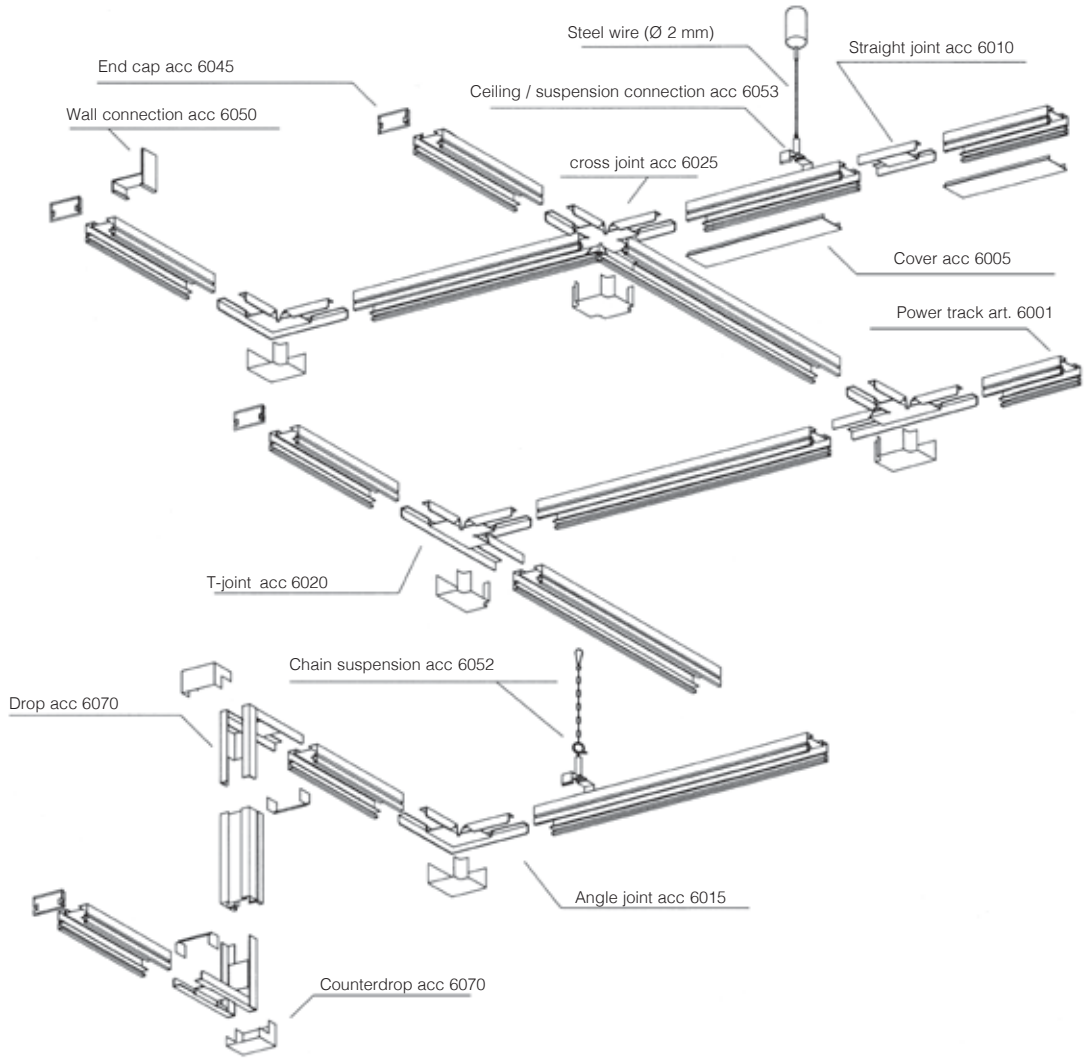

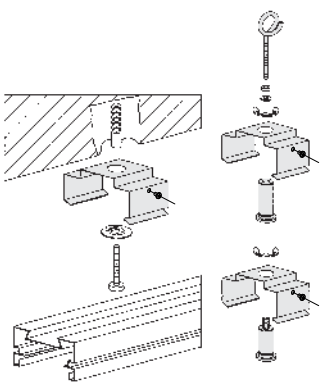

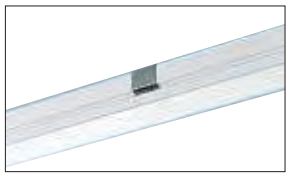

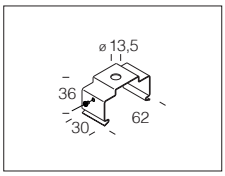

acc. 6051 ceiling / suspension connection

stainless steel	132927-00

In steel. For direct ceiling mounting or suspension with rods. At least 2 pcs. per track.

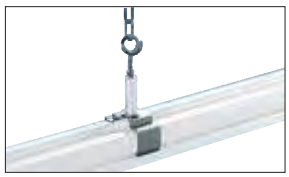

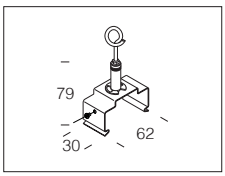

acc. 6052 chain suspension

stainless steel	132928-00

In steel. For chain suspension. With track connection acc 6051. At least 2 pcs. per track.



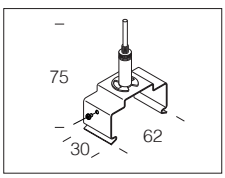

acc. 6053 wire suspension

stainless steel	132929-00

In steel. For suspension with wire. With millimetric adjustment. Complete with acc 6051. Max load: 30 kg.

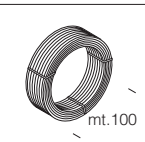

acc. 6512 wire

steel	132930-00

Steel wire. To be used when installation requires a longer wire than the one supplied with acc. 6510.

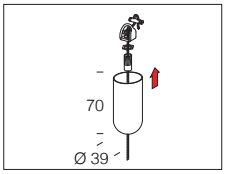

acc. 6510 suspension

white	993914-00

Suspension supplied with Ø 2 mm steel wire, 1.5 m long. Max load: 30 kg. To suspend acc 6053.

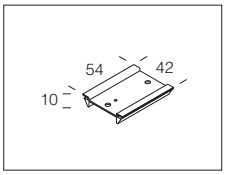

acc. 6030 support-wire clip

white	132906-00

Support, for snap-on fastening on track art. 6000. To be used as wire clip.

MECHANICAL ACCESSORIES AND JOINTS





acc. 6011 safety coupling

white	132907-00

Made of galvanized steel. We recommend using this coupling accessory when mounting the lamp near the joint of track 6001-6002-6003-6021-6022-6023 to obtain greater mechanical safety.

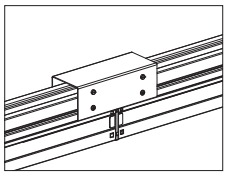





acc. 6050 wall bracket

galvanized	132911-00

Zinc-plated steel bracket. For wall mounting of track art. 6001-6002-6003-6021-6022-6023. 2 per pack.

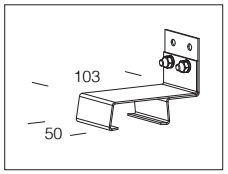



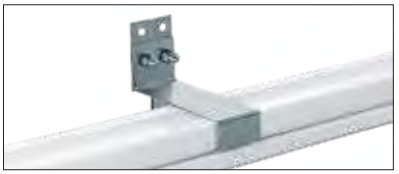

acc. 6010 straight joint

	132902-00

Made of galvanized steel. For alignment of 2 tracks art. 6001-6002-6003-6021-6022-6023. To be used in combination with acc. 6621.

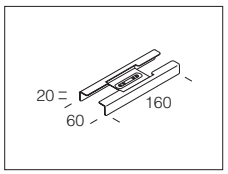

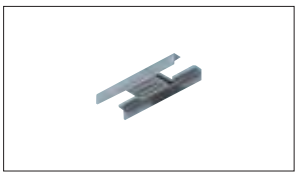

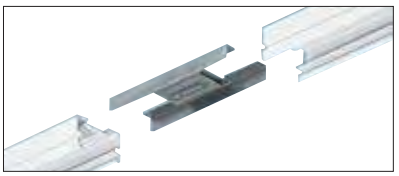

acc. 6015 angle joint

white	132903-00

Made of galvanized steel with a white thermoplastic material cover. For "L"- jointing of 2 tracks art. 6001-6002-6003-6021-6022-6023. To be used in combination with acc. 6621.

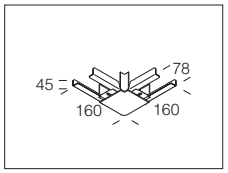

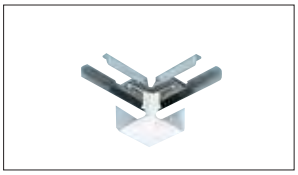

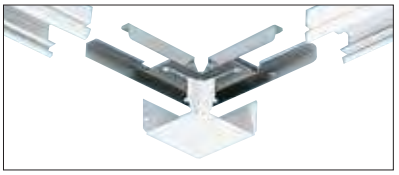

acc. 6020 T joint

white	132904-00

Made of galvanized steel with a white thermoplastic material cover. For jointing of 3 tracks art. 6001-6002-6003-6021-6022-6023. To be used in combination with acc. 6622.

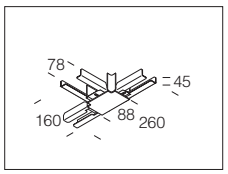

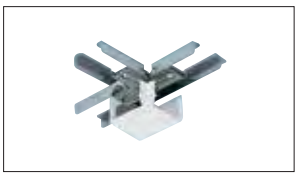

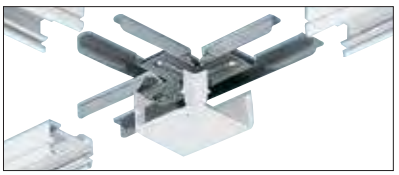

acc. 6025 cross joint

white	132905-00

Made of galvanized steel with a white thermoplastic material cover. For the jointing of 2/3/4 tracks art. 6001-6002-6003-6021-6022-6023. To be used in combination with acc. 6621.

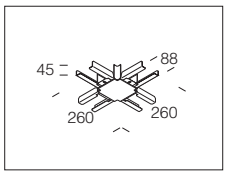

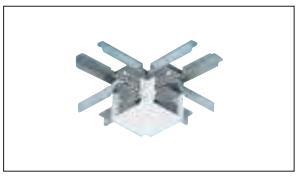

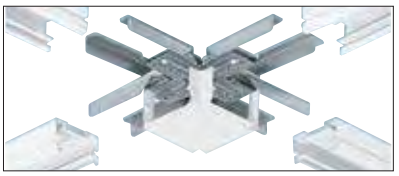

acc. 6005 cover

white	132901-00

V0 self-extinguishing PVC. To cover track art. 6001-6002-6003-6021-6022-6023.

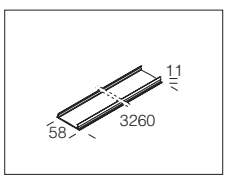

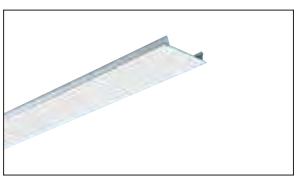



acc. 6045 end cap

white	132909-00

Made of white thermoplastic material. Used to close the end section of track art. 6001-6002-6003-6021-6022-6023.

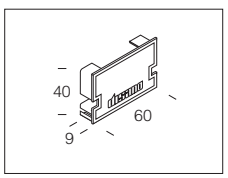



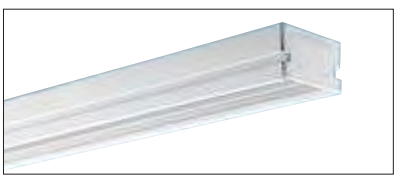


53
54
55

GENERAL CHARACTERISTICS

Housing/Frame: in die-cast aluminium with cooling fins integrated into the cover and designed with a very small surface exposed to wind.

Diffuser: in tempered glass, 4 mm thick, resistant to thermal shocks and impacts (UNI-EN 12150-1: 2001).

Coating: the fully automated powder-coating cycle involves a polyester-based, salt-spray corrosion-resistant and UV-stabilised paint.

Standard supply: the fixture is equipped with waterproof connector for quick installation with **no need to open the fixture;** external screws and bolts in stainless steel. temperature control inside the device with automatic resetting.

SURGE

Electronic safety device to protect the LED module and the related ballast compliant with EN 61547. It works in two modes:
- differential mode: surge between power cables and between the phase and neutral.
- common mode: surge between power, L/N and ground cables or between the fixture's body if it is of class II and installed on a metal pole.

Upon request: for **Class II** fixtures, protection up to 10KV.

OTHER CHARACTERISTICS

Simple and linear aesthetics combines with a sophisticated technology to offer exceptional technical performance: **Astro Q MICRO** was designed to take the best from all the potential of the new high-performance LED lights.



Two attachment points: they are supplied with two steel cables (L= 25cm) having clamping ring for suspension mounting the fixture from two points of attachment.



EM S.A.

Emergency wiring -07: the EM version is integrated as standard in the nylon box up to a maximum of 150W.

OTHER INFORMATION

UGR <22

UGR <25

The UGR (unified glare rating) is an international unified measure developed by the CIE (Commission International de l'Eclairage) to assess the direct glare generated by a lighting system. The European standard regulating the lighting of indoor work places (**UNI-EN 12464-1**) recommends a specific UGR value for different applications ranging between **10 and 30**; **the lower the UGR value, the lower the glare**. The exact value of this index differs by project type because it depends on the position of the luminaires, room characteristics (dimensions, reflections) and on the point of observation of viewers.

POWER SWITCH

POWER SWITCH standard version: in a single body frame, you have a fully equipped luminaire designed to meet any need; with integrated switch you can select the fixture's total wattage, maintaining aesthetic continuity and differentiating the amount of light emitted.

LOW FLICKER

Product with a very low flicker; uniform light for greater eye protection.

UPON REQUEST

it is possible to order **Astro Q MICRO** with lens having photometric distributions that allow considerable design flexibility. Available with different SYMMETRIC, ASYMMETRIC beam angles, these fixtures are ideal for any lighting applications.

Possibility of centralized lighting point control or via **external** presence/lighting sensors (see chapter *Lighting management systems and recommendations*).

Ideal version for spaces with a high concentration of particular volatile chemicals around the luminaires (see chemical compatibility table in chapter *legend and Info*).

-0050 EM-EC

Version **CLD EC** wiring with **subcode -0050:** permanently mounted fixture, operating in AC/DC mode, with centralized emergency device, not incorporated into the fixture.

Luminous flux maintenance Power factor ≥0.95		Wattage (tot.)	Allowed ambient temperature (min.°C ÷ max.°C)
90%	100.000h (L90B10) *(art. 2930-2931-2932-2933-2934)*	60W	Ta = -40°C ÷ +60°C
		90W	Ta = -40°C ÷ +55°C
		120W	Ta = -40°C ÷ +50°C
		150W	Ta = -40°C ÷ +50°C
90%	50.000h (L90B10) *(art. 2935)*	90W	Ta = -40°C ÷ +60°C
		110W	Ta = -40°C ÷ +55°C
80%	100.000h (L80B10) *(art. 2935)*	130W	Ta = -40°C ÷ +50°C

The table below shows the values for standard versions. For further information (expected life, temperatures) and/or for special versions, please contact our customer service.



ACCESSORIES

acc. 30 protection guard

995691-00

Black plastic-coated steel rod protection guard. Screw mounting.

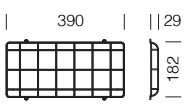

acc. 37 busbar bracket

995706-00

Steel bracket for direct attachment to the busbar.

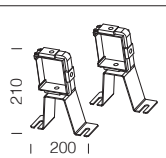

acc. 39 ceiling bracket

995713-00

Steel bracket for direct attachment to the ceiling.

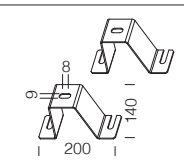

acc. 66
±90/180° adjustable wall bracket

RAL 7021	995692-00

To be installed on the driver; coated steel bracket with graduated scale to allow ±90/180° rotation of the fixture.

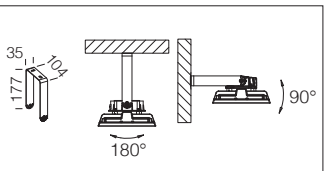



it is possible to order **Astro Q MICRO** with lens having photometric distributions that allow considerable design flexibility. Available with different SYMMETRIC, ASYMMETRIC beam angles, these fixtures are ideal for any lighting applications.

SYMMETRIC BEAM

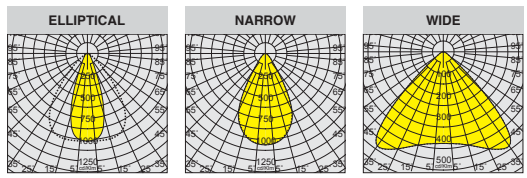

ASYMMETRIC BEAM

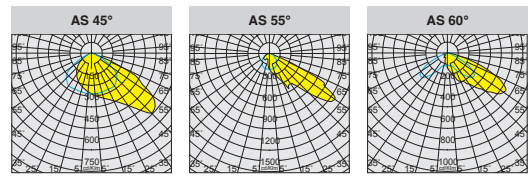

L90 B10 100.000h

RG0 Ethr

max C° min

U.V.

DIMM DIG

-0050 EM-EC

LOW FLICKER

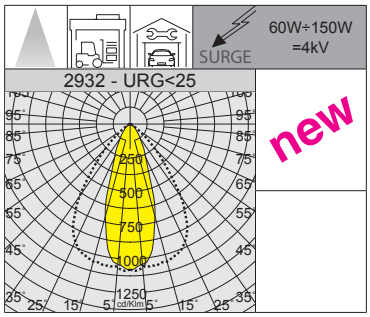

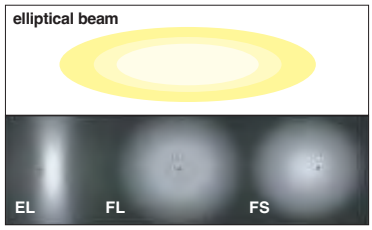

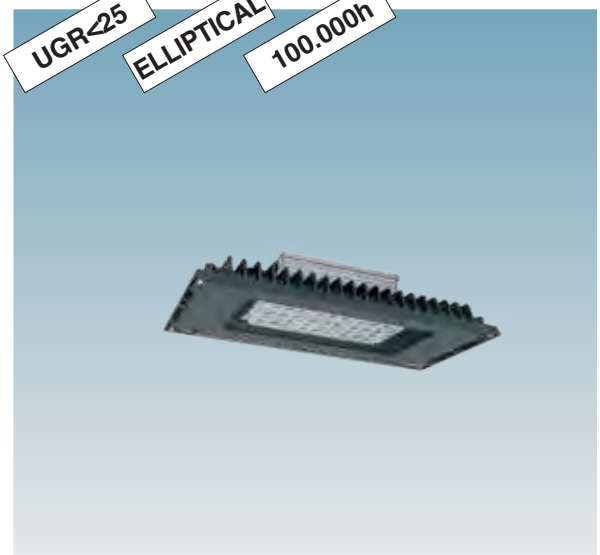

IP66IK08

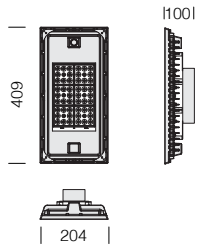

Lenses: in PMMA, highly resistant to temperature and UV radiation.

LED: power factor ≥0.95.
Luminous flux maintenance 90%: 100.000h (L90B10).

2932 Astro Q2 MICRO - elliptical beam - UGR<25

		CLD		CLD D-D (DALI)		LUMEN OUTPUT (tq= 25 °C)
LED	colour	weight	code	code	W tot	K - ølm - CRI
LED	RAL 7021	3.20	390040-00	390040-0041	**60**	4000K - **10605lm** - CRI 80
			390041-00	390041-0041	**90**	4000K - **15488lm** - CRI 80
			390042-00	390042-0041	**120**	4000K - **19583lm** - CRI 80
			390043-00	390043-0041	**150**	4000K - **23783lm** - CRI 80

Upon request: Astro Q MICRO with emergency wiring with centralized power supply **(sub-code -0050)** ideal for **reducing maintenance and installation costs**.

IP66IK08

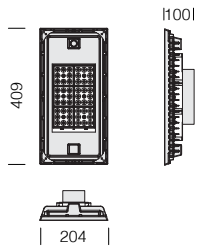

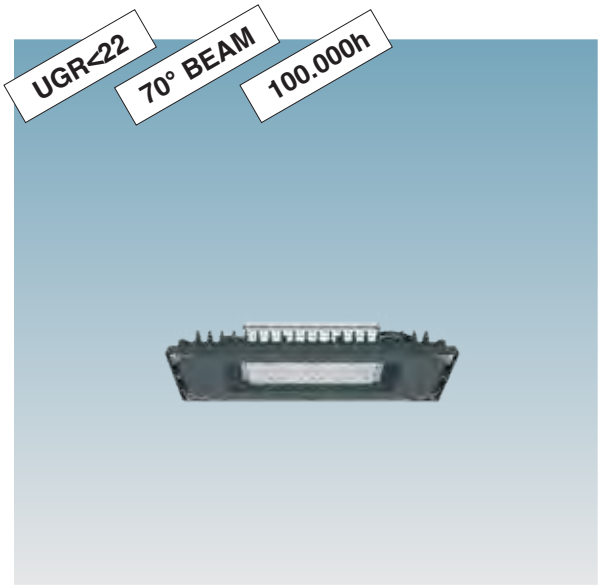

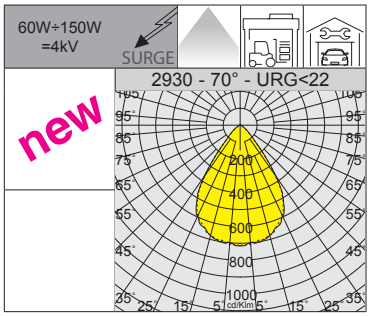

Lenses: in PMMA, highly resistant to temperature and UV radiation.

LED: power factor ≥0.95. Luminous flux maintenance 90%: 100.000h (L90B10).

2930 Astro Q MICRO - 70° - UGR<22

		CLD		CLD D-D (DALI)		LUMEN OUTPUT (tq= 25 °C)
LED	colour	weight	code	code	W tot	K - ølm - CRI
LED	RAL 7021	3.20	390050-00	390050-0041	**60**	4000K - **10710lm** - CRI 80
			390051-00	390051-0041	**90**	4000K - **15645lm** - CRI 80
			390052-00	390052-0041	**120**	4000K - **19793lm** - CRI 80
			390053-00	390053-0041	**150**	4000K - **23993lm** - CRI 80

Upon request: Astro Q MICRO with emergency wiring with centralized power supply **(sub-code -0050)** ideal for **reducing maintenance and installation costs**.

IP66IK08

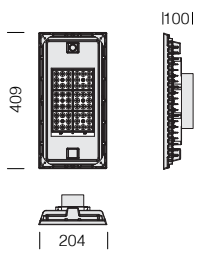



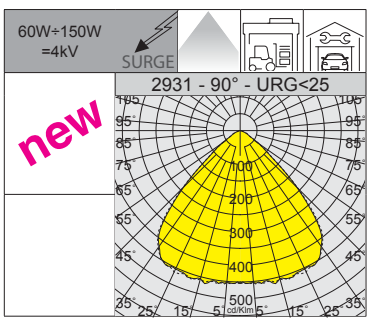

Lenses: in PMMA, highly resistant to temperature and UV radiation.

LED: power factor ≥0.95. Luminous flux maintenance 90%: 100.000h (L90B10).

2931 Astro Q1 MICRO - 90° - UGR<25

		CLD		CLD D-D (DALI)		LUMEN OUTPUT (tq= 25 °C)
LED	colour	weight	code	code	W tot	K - ølm - CRI
LED	RAL 7021	3.20	390060-00	390060-0041	**60**	4000K - **10815lm** - CRI 80
			390061-00	390061-0041	**90**	4000K - **15855lm** - CRI 80
			390062-00	390062-0041	**120**	4000K - **20003lm** - CRI 80
			390063-00	390063-0041	**150**	4000K - **24255lm** - CRI 80

Upon request: Astro Q MICRO with emergency wiring with centralized power supply **(sub-code -0050)** ideal for **reducing maintenance and installation costs**.



L80 B10 100.000h

L90 B10 50.000h

RG0 Ethr

max C° min

U.V.

DIMM DIG

-0050 EM-EC

LOW FLICKER

POWER SWITCH

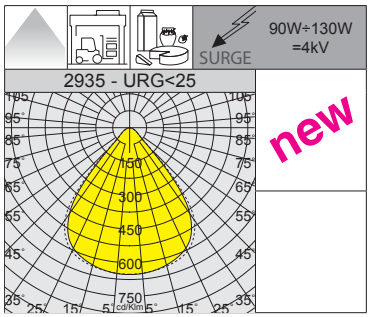

Version with optics in special polycarbonate material, **ideal for the food industry** with special processing methods (*contact the customer service to check compatibility between materials and food products*).

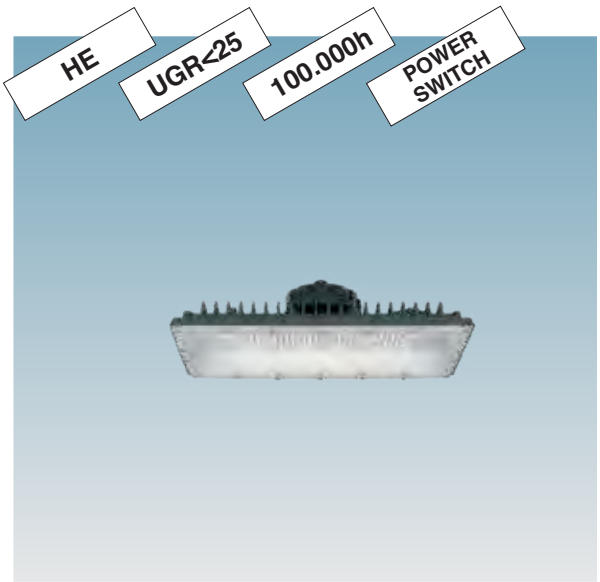

IP66IK08

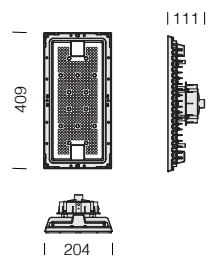

Diffuser: in clear polycarbonate, LEDs with protective lenses.

LED: power factor ≥0.95.
Luminous flux maintenance 80%: 100.000h (L80B10).
Luminous flux maintenance 90%: 50.000h (L90B10).

2935 Astro Q3 MICRO HE - HIGH EFFICIENCY - POWER SWITCH - UGR<25					
		CLD D-D (DALI)			LUMEN OUTPUT (tq= 25 °C)
LED	colour	weight	code	W tot	K - ølm - CRI
LED	RAL 7021	2.90	390095-00	90	4000K - **18690lm** - CRI 80
				110	4000K - **22575lm** - CRI 80
				130	4000K - **26250lm** - CRI 80
Standard luminaire configuration with power ratings of 130W.					

2935 Astro Q3 MICRO HE - DALI - HIGH EFFICIENCY - UGR<25					
		CLD D-D (DALI)			LUMEN OUTPUT (tq= 25 °C)
LED	colour	weight	code	W tot	K - ølm - CRI
LED	RAL 7021	2.90	390095-0041	130	4000K - **26250lm** - CRI 80

Upon request: Astro Q MICRO with emergency wiring with centralized power supply **(sub-code -0050)** ideal for **reducing maintenance and installation costs**.

IP66IK08

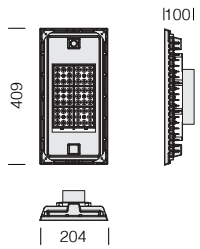

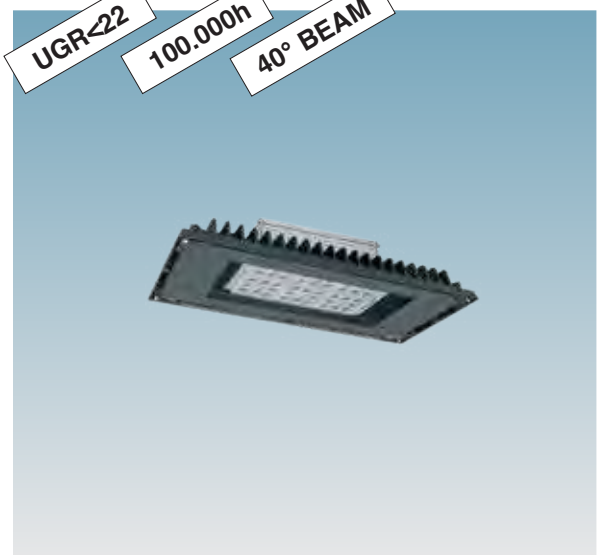

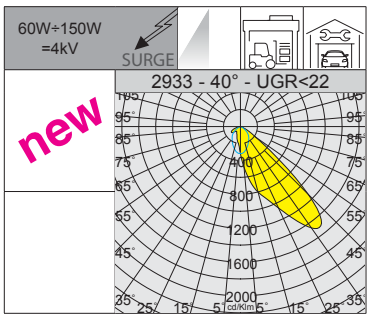

Lenses: in PMMA, highly resistant to temperature and UV radiation.

LED: power factor ≥0.95. Luminous flux maintenance 90%: 100.000h (L90B10).

2933 Astro Q4 MICRO - asymmetric 40° - UGR<22

		CLD		CLD D-D (DALI)		LUMEN OUTPUT (tq= 25 °C)
LED	colour	weight	code	code	W tot	K - ølm - CRI
LED	RAL 7021	3.20	390070-00	390070-0041	**60**	4000K - **10350lm** - CRI 80
			390071-00	390071-0041	**90**	4000K - **14650lm** - CRI 80
			390072-00	390072-0041	**120**	4000K - **19550lm** - CRI 80
			390073-00	390073-0041	**150**	4000K - **23250lm** - CRI 80

Upon request: Astro Q MICRO with emergency wiring with centralized power supply **(sub-code -0050)** ideal for **reducing maintenance and installation costs**.

IP66IK08

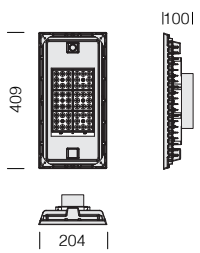

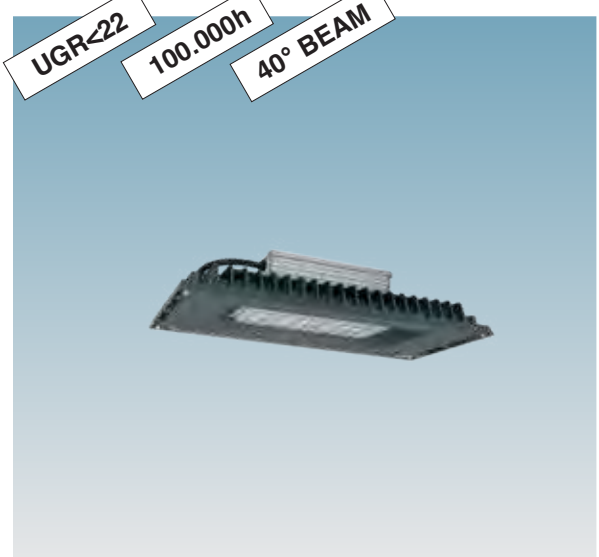

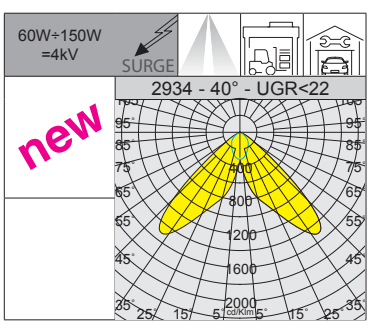

Lenses: in PMMA, highly resistant to temperature and UV radiation.

LED: power factor ≥0.95. Luminous flux maintenance 90%: 100.000h (L90B10).

2934 Astro Q5 MICRO - bi-asymmetric 40° - UGR<22

		CLD		CLD D-D (DALI)		LUMEN OUTPUT (tq= 25 °C)
LED	colour	weight	code	code	W tot	K - ølm - CRI
LED	RAL 7021	3.20	390080-00	390080-0041	**60**	4000K - **10350lm** - CRI 80
			390081-00	390081-0041	**90**	4000K - **14650lm** - CRI 80
			390082-00	390082-0041	**120**	4000K - **19550lm** - CRI 80
			390083-00	390083-0041	**150**	4000K - **23250lm** - CRI 80

Upon request: Astro Q MICRO with emergency wiring with centralized power supply **(sub-code -0050)** ideal for **reducing maintenance and installation costs**.



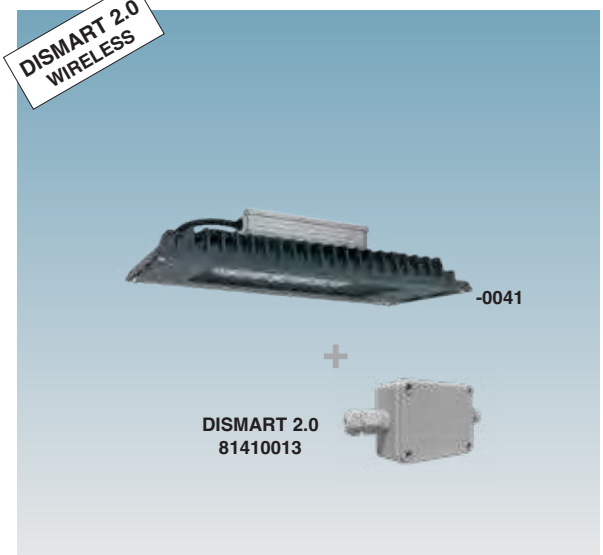

Astro Q MICRO with DISMART 2.0

To set up a **DISMART 2.0** system, you will need to order the following products:
1) DIMM DALI/DALI2 luminaire with **subcode -0041,** dwhich will be associated to the **DISMART 2.0** interface in IP65 box with code **81410013**
2) Gateway module with code **81410011** that will generate the Wi-Fi local network
3) DALI2 sensor interface or N.O. buttons in IP65 box with code **81410014**
4) Free App for mobile devices for complete system management and parameter configuration

DISMART 2.0 - A wireless lighting management system designed for installers and end users, while also supporting designers thanks to its easy integration into lighting installations and compliance with minimum environment criteria (CAMs) for public spaces.

The system is controlled through a simple, user-friendly app and requires no qualified personnel for setup, optimising energy savings and enhancing visual comfort.

It applies mainly to the following sectors: **INDUSTRIAL, LOGISTICS, INDOOR SPORTS.**

CONNECTED AND READY FOR USE IN 3 SIMPLE STEPS



1 **DOWNLOAD:**
download the free version of the iOS/Andorid app

2 **SET UP:**
connect to the gateway of your mobile phone/tablet, then add lamps/sensors/buttons (via QR code)

3 **MANAGE:**
you can create groups and set up control for the lights in each room.

EXAMPLE OF USE

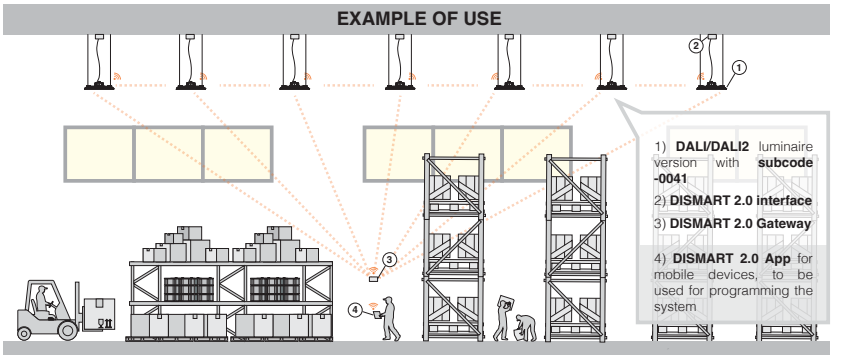

DISMART DISMART 2.0 – Radiofrequency mesh network communication

Presence sensor - ON/OFF

Upon request with sub-code -19: Astro Q micro with easy-to-use, safe and convenient **stand-alone** presence sensor; available in the 0/10V version (with sub-code -1219).

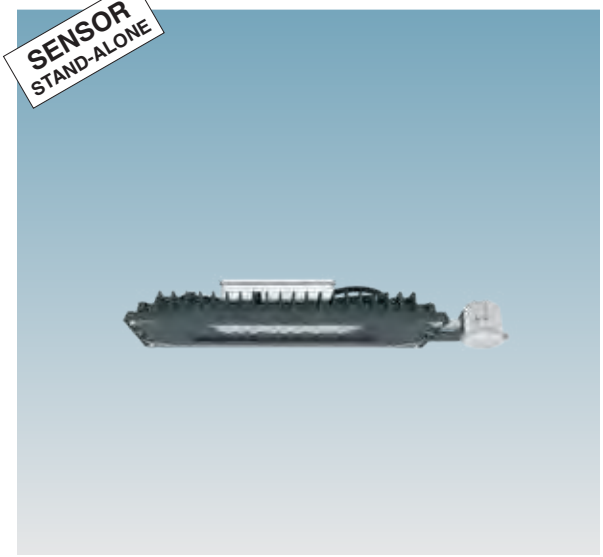

TECHNICAL SPECIFICATIONS	
Power source	220-240 Vac - 50/60Hz
High frequency	5.8GHz±75MHz, ISM wave band, <0.5mW
Detection angle	ceiling: 360° - wall: 150°
Detection area	8 max (choice)
Detection motion speed	0.5~3m/s
Installing height	ceiling: 3-15 m max.
Power consumption	≤0.5W (standby), <1W (operation)
IP degree	IP65
Technology	Microwave
Operating temperature (sensor)	-35 ... +70 °C
Hold time (choice)	5s / 30s / 90s / 3min / 20min / 30min
Ambient light (choice)	5lux / 15lux / 30lux / 50lux /100lux / 150lux / Disable

Remote control (cod. **81420019**) to be purchased separately to change parameters after installation, without opening the fixture



External motion sensor with twilight function (radar sensor with Microwave technology)

SCAN AREA: can be reduced by selecting the relevant combination on the remote control to set sensor data for each application.

HOLD TIME: refers to the amount of time the lamp stays on at 100% of the light level after no motion is detected.

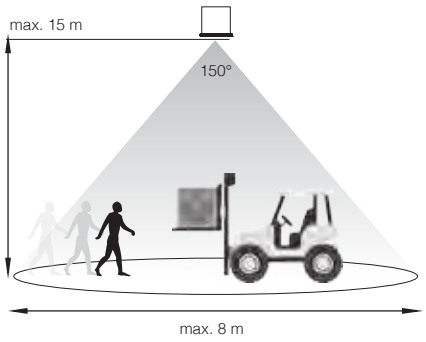

Presence and light sensor - DIMM DALI

Upon request with sub-code -0061: Astro Q micro DALI version with easy-to-use, safe and convenient automatic presence and light sensor.



TECHNICAL SPECIFICATIONS		
Rated supply voltage	220-240 Vac - 50/60Hz	
Power consumption	2 W	
Output, stand-by	0,5 W	
Operating temperature (sensor)	0 ... +60 °C	
IP degree	IP65	
Time delay (regolabile)	min: 30sec - max: 60min	
Technology	PIR	
Max. installation height	* 16m	
Light detection angle	13 °	
Motion detection angle	high	low
	72°	60°
Momentary-action switch input for on/off switching and dimming		

All functions can be set by request or with the (optional cod. **81420111**) remote control

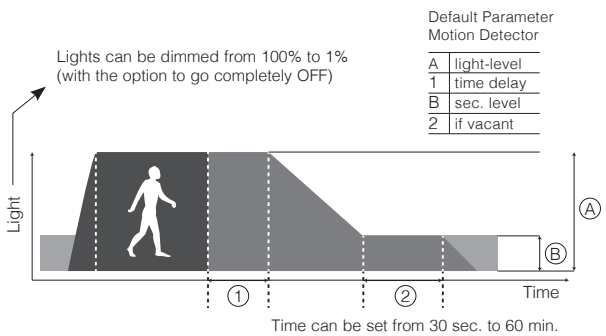

Default Parameter Motion Detector

A	light-level
1	time delay
B	sec. level
2	if vacant

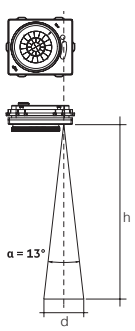

h	d
8 m	1.8 m
10 m	2.3 m
12 m	2.7 m
14 m	3.2 m
16 m	3.7 m
18 m*	4.2 m

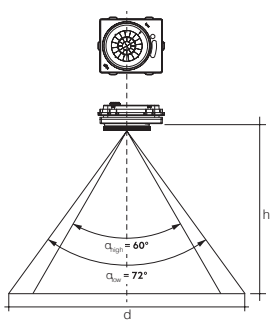

h	Zoom	d
8 m	low	12.0 m
9 m	low	13.5 m
10 m	low	15.0 m
11 m	low	16.5 m
12 m	low	18.0 m
12 m	high	14.0 m
13 m	high	15.2 m
14 m	high	16.4 m
15 m	high	17.6 m
16 m	high	18.8 m
17 m	high	19.8 m
18 m*	high	21.0 m

* **Upon request with sub-code -0062:** version available for 10m max recommended height installation (please contact our customer service when ordering/purchasing the fixture).



ACCESSORIES

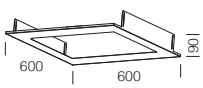

acc. 44 frame for recessed mounting

995701-00

Made of steel sheet; to be used for direct recessed installation of Astro Q MINI.

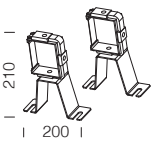

acc. 37 busbar bracket

995706-00

Steel bracket for direct attachment to the busbar.

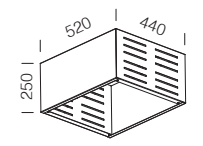

acc. 45 frame ceiling fixture

995704-00

Made of steel sheet; to be used for direct ceiling installation of Astro Q MINI.

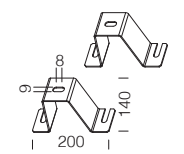

acc. 39 ceiling bracket

995713-00

Steel bracket for direct attachment to the ceiling.

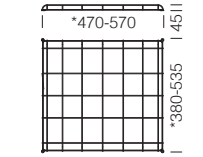

acc. 36 protection guard

*Astro Q MINI	995696-00
Astro Q	995705-00

Black plastic-coated steel rod protection guard. Screw mounting.

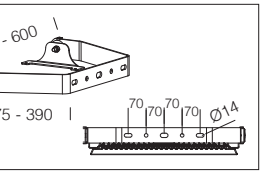

acc. 38 wall bracket

*Astro Q MINI	995695-00
Astro Q	995707-00

RAL 7021 coated steel bracket with graduated scale to allow ±90° rotation of the fixture, to be used for attachment to the wall of Astro Q.

GENERAL CHARACTERISTICS

Housing/Frame: in die-cast aluminium with cooling fins integrated into the cover and designed with a very small surface exposed to wind.

Diffuser: art. 2900-2901-2902 with tempered glass, 4 mm thick, resistant to thermal shocks and impacts (UNI-EN 12150-1: 2001).

Coating: the fully automated powder-coating cycle involves a polyester-based, salt-spray corrosion-resistant and UV-stabilised paint.

Standard supply: the fixture is equipped with waterproof connector for quick installation with **no need to open the fixture;** external screws and bolts in stainless steel. temperature control inside the device with automatic resetting.

SURGE

Electronic safety device to protect the LED module and the related ballast compliant with EN 61547. It works in two modes:
- differential mode: surge between power cables and between the phase and neutral.
- common mode: surge between power, L/N and ground cables or between the fixture's body if it is of class II and installed on a metal pole.

Upon request: for **Class II** fixtures, protection up to 10KV.

LOW FLICKER

Product with a very low flicker; uniform light for greater eye protection.

OTHER CHARACTERISTICS



Simple and linear aesthetics combines with a sophisticated technology to offer exceptional technical performance: **Astro Q MINI - Astro Q** was designed to take the best from all the potential of the new high-performance LED lights.



Two attachment points: they are supplied with two steel cables (L= 25cm) having clamping ring for suspension mounting the fixture from two points of attachment.

Products compliant with ball impact resistance test standard DIN 18032-3: 2018

OTHER INFORMATION

UGR <22

UGR <25

The UGR (unified glare rating) is an international unified measure developed by the CIE (Commission International de l'Eclairage) to assess the direct glare generated by a lighting system. The European standard regulating the lighting of indoor work places (**UNI-EN 12464-1**) recommends a specific UGR value for different applications ranging between **10 and 30**; **the lower the UGR value, the lower the glare**. The exact value of this index differs by project type because it depends on the position of the luminaires, room characteristics (dimensions, reflections) and on the point of observation of viewers.

DIMM DIG

Standard version **CLD D-D (DALI)** wiring with **subcode -0041:** thanks to pre-programmed settings or a software programme, this type of wiring allows accurate light emission dimming.

EM S.A.

Emergency wiring -07: the EM version is integrated into the luminaire as standard.

Registered Design DM/100271

The International Bureau of the World Intellectual Property Organization (WIPO) hereby certifies that the particulars given below correspond to the recording made in the International Register of Industrial Designs.

UPON REQUEST

it is possible to order **Astro Q MINI - Astro Q** with lens having photometric distributions that allow considerable design flexibility. Available with different SYMMETRIC, ASYMMETRIC beam angles, these fixtures are ideal for any lighting applications.

Possibility of centralized lighting point control or via **external** presence/lighting sensors (see chapter *Lighting management systems and recommendations*).

Ideal version for spaces with a high concentration of particular volatile chemicals around the luminaires (see chemical compatibility table in chapter *legend and Info*).

-0050 EM-EC

Version **CLD EC** wiring with **subcode -0050:** permanently mounted fixture, operating in AC/DC mode, with centralized emergency device, not incorporated into the fixture.

LED 6500K

Availlabrle version with **LED 6500K** with **subcode -0083.**

Luminous flux maintenance Power factor ≥0.95		Wattage (tot.)	Allowed ambient temperature (min.°C ÷ max.°C)
90%	100.000h (L90B10) *(art. 2900-2901-2902)*	200W	Ta = -40°C ÷ +70°C
		250W	Ta = -40°C ÷ +65°C
		300W	Ta = -40°C ÷ +65°C
		350W	Ta = -40°C ÷ +60°C
90%	100.000h (L90B10) *(art. 2910-2911-2912)*	195W	Ta = -40°C ÷ +60°C
		235W	Ta = -40°C ÷ +55°C
		290W	Ta = -40°C ÷ +50°C
		340W	Ta = -40°C ÷ +50°C
90%	100.000h (L90B10) *(art. 2920-2921-2922-2924-2925-2926)*	90W	Ta = -40°C ÷ +70°C
		120W	Ta = -40°C ÷ +65°C
		150W	Ta = -40°C ÷ +60°C
		200W	Ta = -40°C ÷ +55°C

The table below shows the values for standard versions. For further information (expected life, temperatures) and/or for special versions, please contact our customer service.





it is possible to order **Astro Q MINI** with lens having photometric distributions that allow considerable design flexibility. Available with different SYMMETRIC, ASYMMETRIC beam angles, these fixtures are ideal for any lighting applications.

SYMMETRIC BEAM

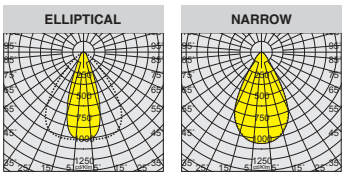

ASYMMETRIC BEAM

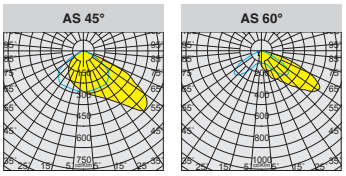

L90 B10 100.000h

RG0 Ethr

max C° min

U.V.

DIMM DIG

-0050 EM-EC

LOW FLICKER

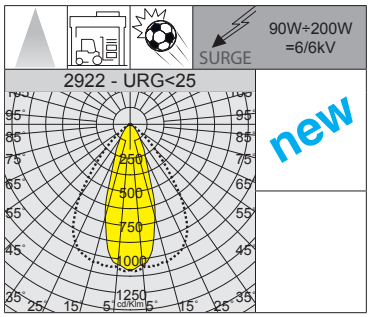

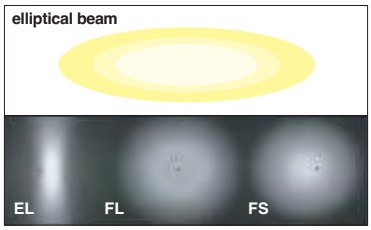



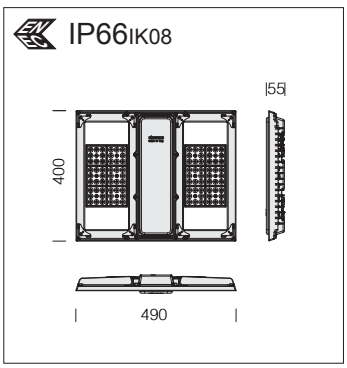

Lenses: in PMMA, highly resistant to temperature and UV radiation.

LED: power factor ≥0.95.
Luminous flux maintenance 90%: 100.000h (L90B10).

2922 Astro Q2 MINI - elliptical beam - UGR<22

		CLD		CLD D-D (DALI)		LUMEN OUTPUT (tq= 25 °C)
LED	colour	weight	code	code	W tot	K - ølm - CRI
LED	RAL 7021	5.00	380050-00	380050-0041	**90**	4000K - **16640lm** - CRI 80
			380051-00	380051-0041	**120**	4000K - **21841lm** - CRI 80
			380052-00	380052-0041	**150**	4000K - **27041lm** - CRI 80
			380053-00	380053-0041	**200**	4000K - **33281lm** - CRI 80

As standard it comes with a programmable driver that regulates the supply current (to be requested separately from our sales office) to incorporate energy efficiency into any design.

Upon request: Astro Q MINI with emergency wiring with centralized power supply **(subcode -0050)** ideal for **reducing maintenance and installation costs**; available in **6500K** LED version (**subcode -0083**).

IP66 IK08

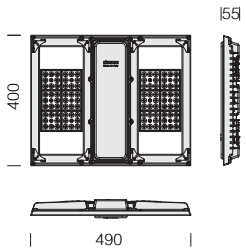



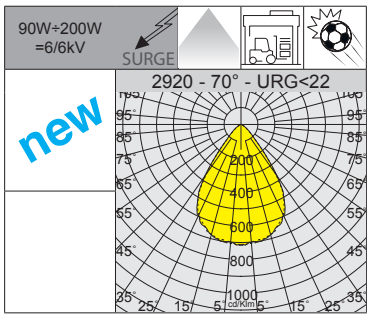

Lenses: in PMMA, highly resistant to temperature and UV radiation.

LED: power factor ≥0.95. Luminous flux maintenance 90%: 100.000h (L90B10).

Upon request: (subcode -0083)	
LED	6500K - CRI 80

2920 Astro Q MINI - 70° - UGR<22

		CLD		CLD D-D (DALI)		LUMEN OUTPUT (tq= 25 °C)
LED	colour	weight	code	code	W tot	K - ølm - CRI
LED	RAL 7021	5.00	380030-00	380030-0041	**90**	4000K - **16632lm** - CRI 80
			380031-00	380031-0041	**120**	4000K - **21830lm** - CRI 80
			380032-00	380032-0041	**150**	4000K - **27027lm** - CRI 80
			380033-00	380033-0041	**200**	4000K - **33264lm** - CRI 80

As standard it comes with a programmable driver that regulates the supply current (to be requested separately from our sales office) to incorporate energy efficiency into any design.

Upon request: Astro Q MINI with emergency wiring with centralized power supply **(subcode -0050)** ideal for **reducing maintenance and installation costs**; available in **6500K** LED version (**subcode -0083**).

IP66 IK08

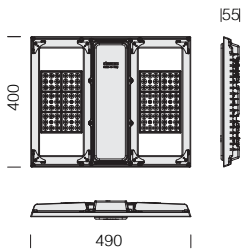



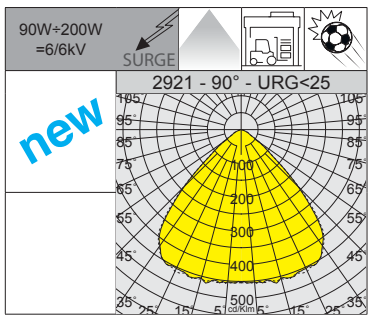

Lenses: in PMMA, highly resistant to temperature and UV radiation.

LED: power factor ≥0.95. Luminous flux maintenance 90%: 100.000h (L90B10).

Upon request: (subcode -0083)	
LED	6500K - CRI 80

2921 Astro Q1 MINI - 90° - UGR<25

		CLD		CLD D-D (DALI)		LUMEN OUTPUT (tq= 25 °C)
LED	colour	weight	code	code	W tot	K - ølm - CRI
LED	RAL 7021	5.00	380040-00	380040-0041	**90**	4000K - **16800lm** - CRI 80
			380041-00	380041-0041	**120**	4000K - **22050lm** - CRI 80
			380042-00	380042-0041	**150**	4000K - **27300lm** - CRI 80
			380043-00	380043-0041	**200**	4000K - **33600lm** - CRI 80

As standard it comes with a programmable driver that regulates the supply current (to be requested separately from our sales office) to incorporate energy efficiency into any design.

Upon request: Astro Q MINI with emergency wiring with centralized power supply **(subcode -0050)** ideal for **reducing maintenance and installation costs**; available in **6500K** LED version (**subcode -0083**).



L90 B10 100.000h

RG0 Ethr

max C° min

U.V.

DIMM DIG

-0050 EM-EC

LOW FLICKER

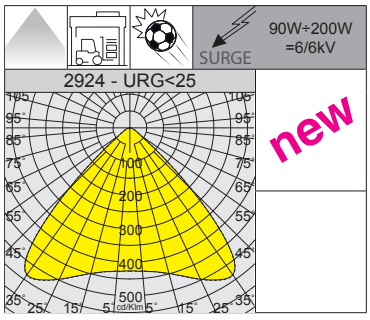

Upon request: (subcode -0083)	
LED	6500K - CRI 80



IP66IK08

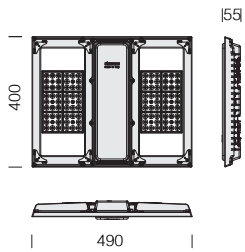

Lenses: in PMMA, highly resistant to temperature and UV radiation.

LED: power factor ≥0.95. Luminous flux maintenance 90%: 100.000h (L90B10).

2924 Astro Q3 MINI - XL wide beam - UGR<25

		CLD		CLD D-D (DALI)		LUMEN OUTPUT (tq= 25 °C)
LED	colour	weight	code	code	W tot	K - ølm - CRI
LED	RAL 7021	5.00	390100-00	390100-0041	**90**	4000K - **16320lm** - CRI 80
			390101-00	390101-0041	**120**	4000K - **21260lm** - CRI 80
			390102-00	390102-0041	**150**	4000K - **27320lm** - CRI 80
			390103-00	390103-0041	**200**	4000K - **34070lm** - CRI 80

As standard it comes with a programmable driver that regulates the supply current (to be requested separately from our sales office) to incorporate energy efficiency into any design.

Upon request: Astro Q MINI with emergency wiring with centralized power supply **(subcode -0050)** ideal for **reducing maintenance and installation costs**; available in **6500K** LED version (**subcode -0083**).

IP66 IK08

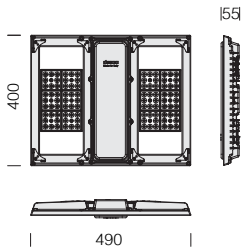



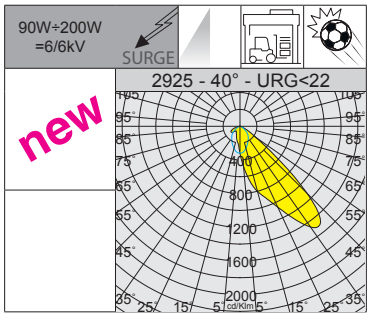

Lenses: in PMMA, highly resistant to temperature and UV radiation.

LED: power factor ≥0.95. Luminous flux maintenance 90%: 100.000h (L90B10).

Upon request: (subcode -0083)	
LED	6500K - CRI 80

2925 Astro Q4 MINI - asymmetric 40° - UGR<22

		CLD		CLD D-D (DALI)		LUMEN OUTPUT (tq= 25 °C)
LED	colour	weight	code	code	W tot	K - ølm - CRI
LED	RAL 7021	5.00	390110-00	390110-0041	**90**	4000K - **15850lm** - CRI 80
			390111-00	390111-0041	**120**	4000K - **20650lm** - CRI 80
			390112-00	390112-0041	**150**	4000K - **26530lm** - CRI 80
			390113-00	390113-0041	**200**	4000K - **33150lm** - CRI 80

As standard it comes with a programmable driver that regulates the supply current (to be requested separately from our sales office) to incorporate energy efficiency into any design.

Upon request: Astro Q MINI with emergency wiring with centralized power supply **(subcode -0050)** ideal for **reducing maintenance and installation costs**; available in **6500K** LED version (**subcode -0083**).

IP66 IK08

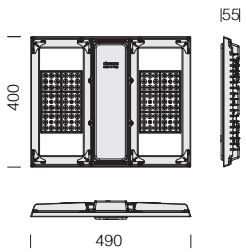



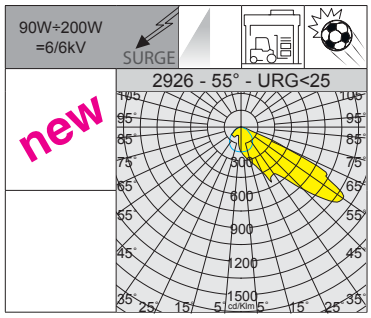

Lenses: in PMMA, highly resistant to temperature and UV radiation.

LED: power factor ≥0.95. Luminous flux maintenance 90%: 100.000h (L90B10).

Upon request: (subcode -0083)	
LED	6500K - CRI 80

2926 Astro Q5 MINI - asymmetric 55° - UGR<25

		CLD		CLD D-D (DALI)		LUMEN OUTPUT (tq= 25 °C)
LED	colour	weight	code	code	W tot	K - ølm - CRI
LED	RAL 7021	5.00	390120-00	390120-0041	**90**	4000K - **15530lm** - CRI 80
			390121-00	390121-0041	**120**	4000K - **20237lm** - CRI 80
			390122-00	390122-0041	**150**	4000K - **25950lm** - CRI 80
			390123-00	390123-0041	**200**	4000K - **32487lm** - CRI 80

As standard it comes with a programmable driver that regulates the supply current (to be requested separately from our sales office) to incorporate energy efficiency into any design.

Upon request: Astro Q MINI with emergency wiring with centralized power supply **(subcode -0050)** ideal for **reducing maintenance and installation costs**; available in **6500K** LED version (**subcode -0083**).

DISMART 2.0 WIRELESS

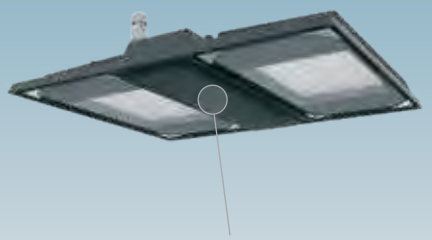

Light controller integrated inside the fixture

Astro Q MINI with DISMART 2.0

To set up a **DISMART 2.0** system, you will need to order the following products:

1) WIRELESS luminaire complete with **light controller** module with **subcode -24**

2) Gateway module with code **81410011** that will generate the Wi-Fi local network

3) DALI2 sensor interface or N.O. buttons in IP65 box with code **81410014**

4) DIMM DALI/DALI2 luminaire with **subcode -0041,** dwhich will be associated to the **DISMART 2.0** interface in IP65 box with code **81410013**

5) Free App for mobile devices for complete system management and parameter configuration

DISMART 2.0 - A wireless lighting management system designed for installers and end users, while also supporting designers thanks to its easy integration into lighting installations and compliance with minimum environment criteria (CAMs) for public spaces.

The system is controlled through a simple, user-friendly app and requires no qualified personnel for setup, optimising energy savings and enhancing visual comfort.

It applies mainly to the following sectors: **INDUSTRIAL, LOGISTICS, INDOOR SPORTS.**

CONNECTED AND READY FOR USE IN 3 SIMPLE STEPS



1 **DOWNLOAD:**
download the free version of the iOS/Andorid app

2 **SET UP:**
connect to the gateway of your mobile phone/tablet, then add lamps/sensors/buttons (via QR code)

3 **MANAGE:**
you can create groups and set up control for the lights in each room.

EXAMPLE OF USE

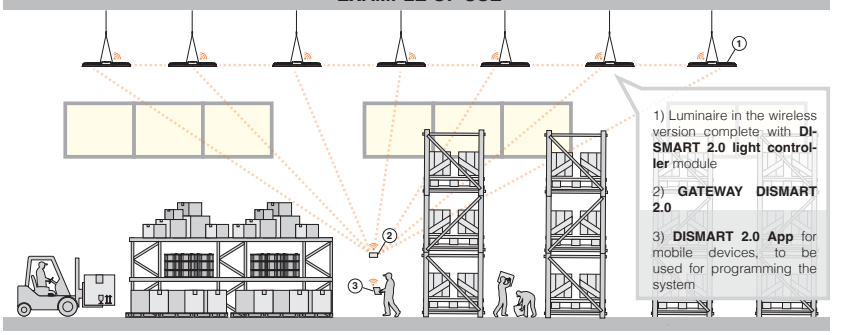

DISMART DISMART 2.0 – Radiofrequency mesh network communication

ZHAGA SOCKET



Astro Q MINI with Zagha Socket

Zhaga **Upon request with subcode -0054**: Astro Q MINI designed to accept **Zhaga Socket.**

Thanks to the **Zhaga socket**, the end user can easily install any type of controller (to be purchased separately) turning the fixture into a **SMART** fixture and therefore capable of being managed with the most common lighting control systems available on the market. This type of solution is ideal in industrial environments where constant light and motion control are required.



Main characteristics of the **Zhaga socket**:
- Standard interface for all wireless networks
- 24Vdc power, not prone to spikes/overvoltage
- Simple and fast installation of wireless controller
- Ready network: the initial wireless installation and successive update through a wireless network controller
- Quick and simple management of the wireless controller

The socket provides electrical and mechanical connection between the sensor and the fixture necessary to manage industrial lights effectively and efficiently.

Advantages:

- Easy tool-free mounting. The module is attached and secured with a bayonet clamp
- Compact dimensions for greater design flexibility
- The special (push-in) contacts reduce logistics problems arising from the need to use cables with various lengths for different lighting fixtures
- Single built-in seal that protects both the fixture and the modules, minimizing mounting times.

EXAMPLE OF REQUEST: TECHNICAL CHARACTERISTICS	
Mains voltage	220-240 Vac - 50/60Hz
Frequency	5.8GHz±75MHz
Detection angle	ceiling: 360°
Detection area	8m max. (adjustable)
Installation height	ceiling: 15 m max.
Energy consumption	≤ 0.3W (standby)
Operating temperature (sensor)	-35 ... +70 °C



Exemple with Zhaga Socket (subcode -0054) and sensor

PARAMETERS SETTINGS	
Detection area	25% / 50% /75% /100%
Stand-by time	0s /10s/ 1min / 3min / 5min / 10min / 30min / +∞
Ambient light (adjustable)	Threshold :5lux /15lux / 30lux / 50lux /100lux /150lux / Disable Priority: ON/OFF (5lux / 15lux / 30Lux / 50lux) / 150lux 100lux / 200lux 150lux / 300lux
Hold Time (adjustable)	5s / 30s /1min / 3min / 5min / 10min / 20min / 30min
Stand-by dimming level	10% / 20% / 30% / 50%

Presence and light sensor - STAND-ALONE

Upon request with subcode -1219: Astro Q comes with **stand-alone** presence and light sensor with 0-10V control

TECHNICAL CHARACTERISTICS	
Mains voltage	220-240 Vac - 50/60Hz
Frequency	5.8GHz±75MHz
Detection angle	ceiling: 360°
Detection area	8-14m max (adjustable)
Installation height	ceiling: 12 m (≤ 15 m max.)
Energy consumption	≤ 0.5W (stand-by)
Technology	Microwave
Sensor operating temperature	-20 ... +70 °C

(Optional cod. **81418618**) remote control to change parameters after installation, without opening the fixture



Sensor integrated inside the fixture


If the sensor does not detect motion, lights stay on constant for a pre-set time.


As soon as the sensor detects motion in the scan area, lights will automatically increase to 100%.


If no motion is detected after a certain amount of time, the sensor will dim back to the set level.

PARAMETERS SETTINGS WITH REMOTE CONTROL	
Technology	Remote control (optional)
Detection area	100% / 75% / 50% / 25%
Motion detection speed	0,5~1,5m/s
Hold time (adjustable)	5s / 30s / 1min/ 3min / 5min / 10min / 20min / 30min
Ambient light (adjustable)	2lux / 10lux /30lux / 50lux / 80lux / 120lux / OFF
Stand-by dimming level (adjustable)	10% / 20% / 30% / 50%

Presence and light sensors - DIMM DALI

Upon request with subcode -0061: Astro Q DALI version with easy-to-use, safe and convenient automatic presence and light sensor.

TECHNICAL SPECIFICATIONS		
Rated supply voltage	220-240 Vac - 50/60Hz	
Power consumption	2 W	
Output, stand-by	0,5 W	
Operating temperature (sensor)	0 ... +60 °C	
IP degree	IP65	
Time delay (regolabile)	min: 30sec - max: 60min	
Technology	PIR	
Max. installation height	* 16m	
Light detection angle	13 °	
Motion detection angle	high	low
	72°	60°
Momentary-action switch input for on/off switching and dimming		

All functions can be set by request or with the (optional cod. **81420111**) remote control



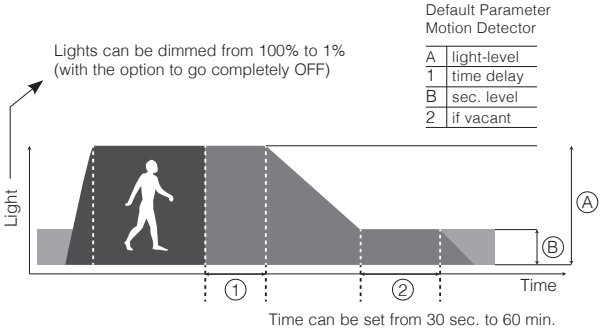

Time can be set from 30 sec. to 60 min.

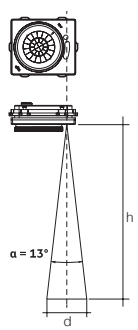

h	d
8 m	1.8 m
10 m	2.3 m
12 m	2.7 m
14 m	3.2 m
16 m	3.7 m
18 m*	4.2 m

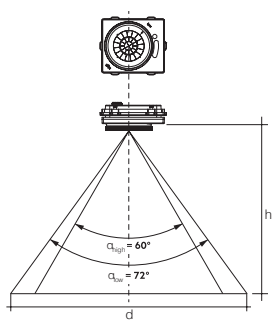

h	Zoom	d
8 m	low	12.0 m
9 m	low	13.5 m
10 m	low	15.0 m
11 m	low	16.5 m
12 m	low	18.0 m
12 m	high	14.0 m
13 m	high	15.2 m
14 m	high	16.4 m
15 m	high	17.6 m
16 m	high	18.8 m
17 m	high	19.8 m
18 m*	high	21.0 m

* **Upon request with subcode -0062:** version available for 10m max recommended height installation (please contact our customer service when ordering/purchasing the fixture).



Luminous flux maintenance Power factor ≥0.95		Wattage (tot.)	Allowed ambient temperature (min.°C ÷ max.°C)
90%	100.000h (L90B10) *(art. 2900-2901-2902)*	200W	Ta = -40°C ÷ +70°C
		250W	Ta = -40°C ÷ +65°C
		300W	Ta = -40°C ÷ +65°C
		350W	Ta = -40°C ÷ +60°C
90%	100.000h (L90B10) *(art. 2910-2911-2912)*	195W	Ta = -40°C ÷ +60°C
		235W	Ta = -40°C ÷ +55°C
		290W	Ta = -40°C ÷ +50°C
		340W	Ta = -40°C ÷ +50°C

The table below shows the values for standard versions. For further information (expected life, temperatures) and/or for special versions, please contact our customer service.

it is possible to order **Astro Q** with lens having photometric distributions that allow considerable design flexibility.

• available with different SYMMETRIC, ASYMMETRIC beam angles, these fixtures are ideal for any lighting applications.

SYMMETRIC BEAM

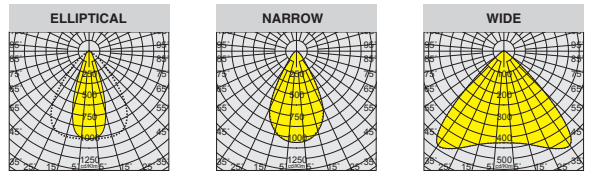

ASYMMETRIC BEAM

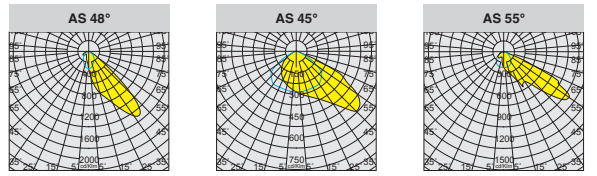

• available **counter-flow lighting** version: in the counter-flow lighting technique the light is aimed in the direction opposite to the flow of traffic. This helps observers to perceive the objects on the roadway as vividly highlighted against the background. Additionally, aiming the light mostly towards observers results in higher luminous efficacy on the roadway.

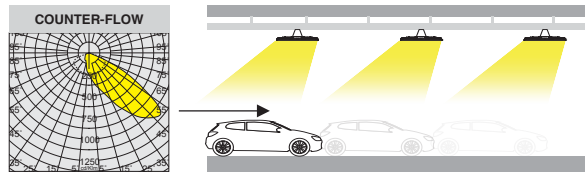

L90 B10 100.000h

RG0 Ethr

max C° min

U.V.

DIMM DIG

-0050 EM-EC

LOW FLICKER

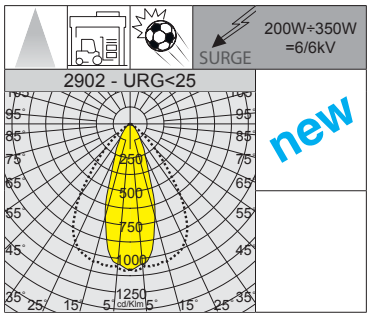

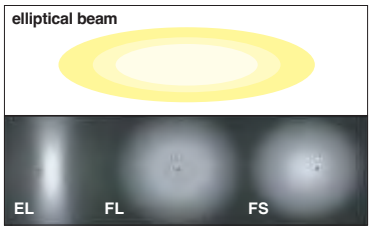



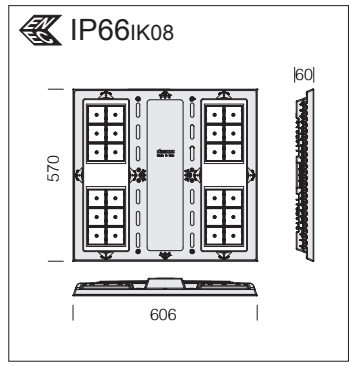

Lenses: in PMMA, highly resistant to temperature and UV radiation.

LED: power factor ≥0.95.
Luminous flux maintenance 90%: 100.000h (L90B10).

2902 Astro Q2 - elliptical beam - UGR<25

		CLD		CLD D-D (DALI)		LUMEN OUTPUT (tq= 25 °C)
LED	colour	weight	code	code	W tot	K - ølm - CRI
LED	RAL 7021	10.50	380020-00	380020-0041	**200**	4000K - **35358lm** - CRI 80
			380021-00	380021-0041	**250**	4000K - **42632lm** - CRI 80
			380022-00	380022-0041	**300**	4000K - **50951lm** - CRI 80
			380023-00	380023-0041	**350**	4000K - **57190lm** - CRI 80

As standard it comes with a programmable driver that regulates the supply current (to be requested separately from our sales office) to incorporate energy efficiency into any design.

Upon request: Astro Q with emergency wiring with centralized power supply **(subcode -0050)** ideal for **reducing maintenance and installation costs**; available in **6500K** LED version (**subcode -0083**).

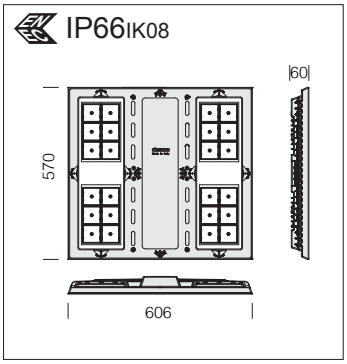



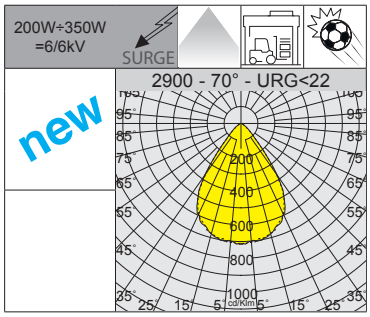

Lenses: in PMMA, highly resistant to temperature and UV radiation.

LED: power factor ≥0.95. Luminous flux maintenance 90%: 100.000h (L90B10).

Upon request: (subcode -0083)	
LED	6500K - CRI 80

2900 Astro Q - 70° - UGR<22

		CLD		CLD D-D (DALI)		LUMEN OUTPUT (tq= 25 °C)
LED	colour	weight	code	code	W tot	K - ølm - CRI
LED	RAL 7021	10.50	380000-00	380000-0041	**200**	4000K - **35343lm** - CRI 80
			380001-00	380001-0041	**250**	4000K - **42620lm** - CRI 80
			380002-00	380002-0041	**300**	4000K - **50936lm** - CRI 80
			380003-00	380003-0041	**350**	4000K - **57173lm** - CRI 80

As standard it comes with a programmable driver that regulates the supply current (to be requested separately from our sales office) to incorporate energy efficiency into any design.

Upon request: Astro Q with emergency wiring with centralized power supply **(subcode -0050)** ideal for **reducing maintenance and installation costs**; available in **6500K** LED version (**subcode -0083**).

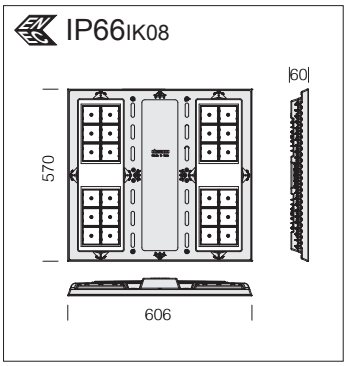

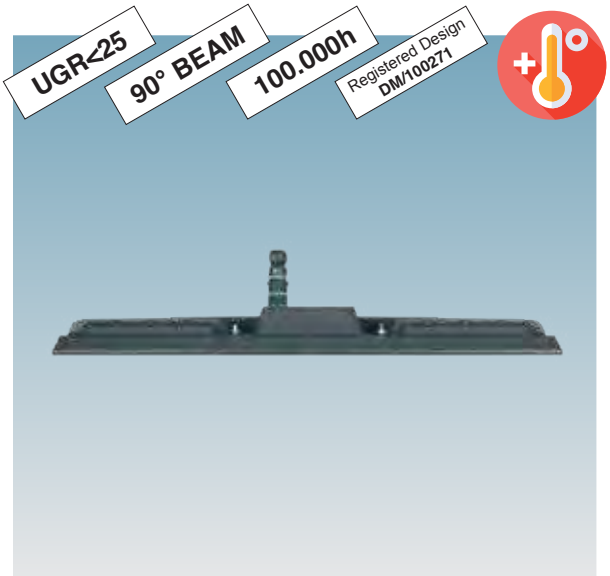

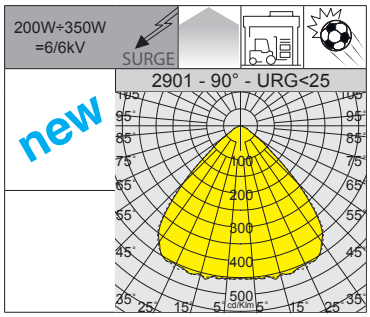

Lenses: in PMMA, highly resistant to temperature and UV radiation.

LED: power factor ≥0.95. Luminous flux maintenance 90%: 100.000h (L90B10).

Upon request: (subcode -0083)	
LED	6500K - CRI 80

2901 Astro Q1 - 90° - UGR<25

		CLD		CLD D-D (DALI)		LUMEN OUTPUT (tq= 25 °C)
LED	colour	weight	code	code	W tot	K - ølm - CRI
LED	RAL 7021	10.50	380010-00	380010-0041	**200**	4000K - **35700lm** - CRI 80
			380011-00	380011-0041	**250**	4000K - **43050lm** - CRI 80
			380012-00	380012-0041	**300**	4000K - **51450lm** - CRI 80
			380013-00	380013-0041	**350**	4000K - **57750lm** - CRI 80

As standard it comes with a programmable driver that regulates the supply current (to be requested separately from our sales office) to incorporate energy efficiency into any design.

Upon request: Astro Q with emergency wiring with centralized power supply **(subcode -0050)** ideal for **reducing maintenance and installation costs**; available in **6500K** LED version (**subcode -0083**).



L90 B10 100.000h

RGO Ethr

max C° min

U.V.

DIMM DIG

-0050 EM-EC

LOW FLICKER

4000K

6500K

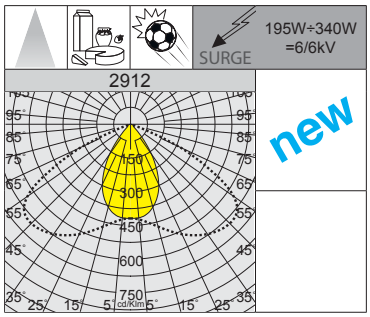

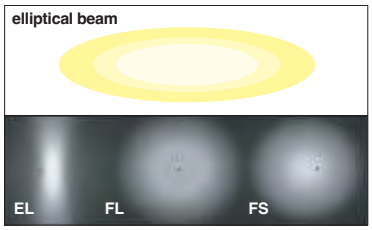



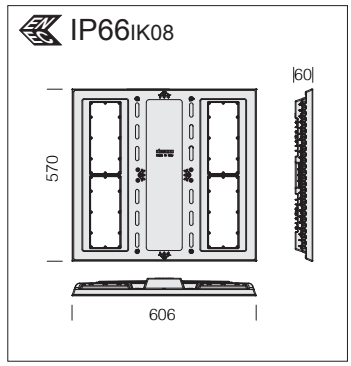

Optics: in polycarbonate, highly resistant to temperature and UV radiation.

LED: power factor ≥0.95.
Luminous flux maintenance 90%: 100.000h (L90B10).

2912 Astro Q12 - elliptical beam

		CLD		CLD D-D (DALI)		LUMEN OUTPUT (tq= 25 °C)
LED	colour	weight	code	code	W tot	K - ølm - CRI
LED	RAL 7021	10.20	390020-00	390020-0041	**195**	4000K - **34913lm** - CRI 80
			390021-00	390021-0041	**235**	4000K - **42788lm** - CRI 80
			390022-00	390022-0041	**290**	4000K - **50085lm** - CRI 80
			390023-00	390023-0041	**340**	4000K - **57015lm** - CRI 80

As standard it comes with a programmable driver that regulates the supply current (to be requested separately from our sales office) to incorporate energy efficiency into any design.

Upon request: Astro Q with emergency wiring with centralized power supply **(subcode -0050)** ideal for **reducing maintenance and installation costs**; available in **6500K** LED version (**subcode -0083**).

IP66IK08

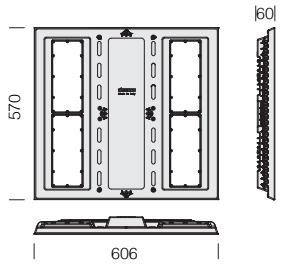



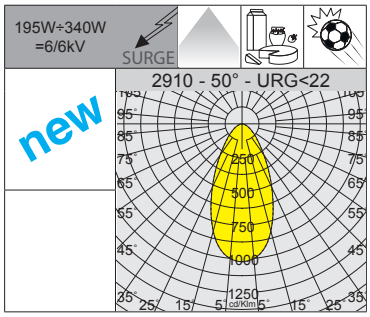

Optics: in polycarbonate, highly resistant to temperature and UV radiation.

LED: power factor ≥0.95. Luminous flux maintenance 90%: 100.000h (L90B10).

Version with optics in special polycarbonate material, **ideal for the food industry** with special processing methods (*contact the customer service to check compatibility between materials and food products*).

Upon request: (subcode -0083)	
LED	6500K - CRI 80

2910 Astro Q10 - 50° - UGR<22

		CLD		CLD D-D (DALI)		LUMEN OUTPUT (tq= 25 °C)
LED	colour	weight	code	code	W tot	K - ølm - CRI
LED	RAL 7021	10.20	* 390000-00	* 390000-0041	**195**	4000K - **32603lm** - CRI 80
			390001-00	390001-0041	**235**	4000K - **40005lm** - CRI 80
			390002-00	390002-0041	**290**	4000K - **46830lm** - CRI 80
			390003-00	390003-0041	**340**	4000K - **53340lm** - CRI 80

As standard it comes with a programmable driver that regulates the supply current (to be requested separately from our sales office) to incorporate energy efficiency into any design.

Upon request: Astro Q with emergency wiring with centralized power supply **(subcode -0050)** ideal for **reducing maintenance and installation costs**; available in **6500K** LED version (**subcode -0083**).

IP66IK08

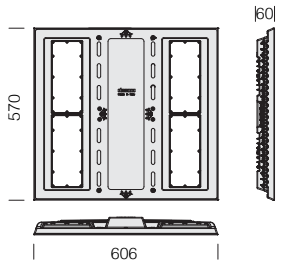

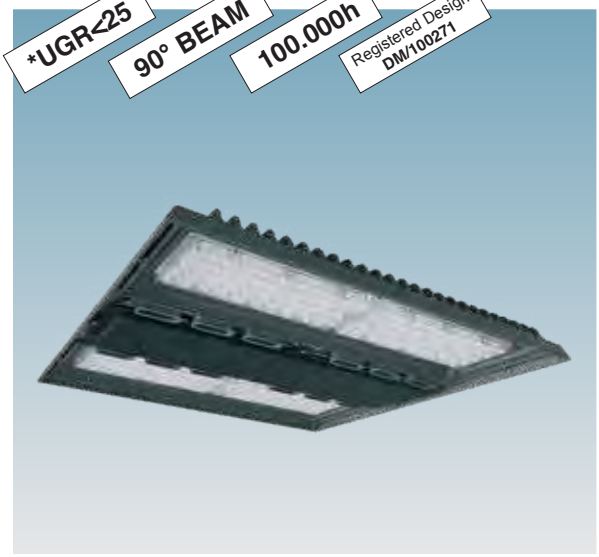

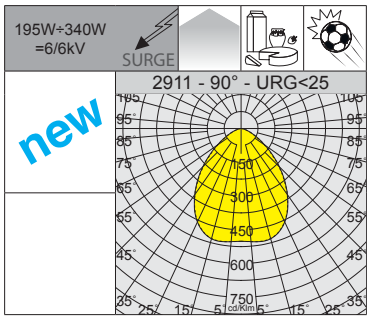

Optics: in polycarbonate, highly resistant to temperature and UV radiation.

LED: power factor ≥0.95. Luminous flux maintenance 90%: 100.000h (L90B10).

Version with optics in special polycarbonate material, **ideal for the food industry** with special processing methods (*contact the customer service to check compatibility between materials and food products*).

Upon request: (subcode -0083)	
LED	6500K - CRI 80

2911 Astro Q11 - 90° - UGR<25

		CLD		CLD D-D (DALI)		LUMEN OUTPUT (tq= 25 °C)
LED	colour	weight	code	code	W tot	K - ølm - CRI
LED	RAL 7021	10.20	* 390010-00	* 390010-0041	**195**	4000K - **33758lm** - CRI 80
			* 390011-00	* 390011-0041	**235**	4000K - **41423lm** - CRI 80
			* 390012-00	* 390012-0041	**290**	4000K - **48458lm** - CRI 80
			390013-00	390013-0041	**340**	4000K - **55440lm** - CRI 80

As standard it comes with a programmable driver that regulates the supply current (to be requested separately from our sales office) to incorporate energy efficiency into any design.

Upon request: Astro Q with emergency wiring with centralized power supply **(subcode -0050)** ideal for **reducing maintenance and installation costs**; available in **6500K** LED version (**subcode -0083**).

DISMART 2.0 WIRELESS

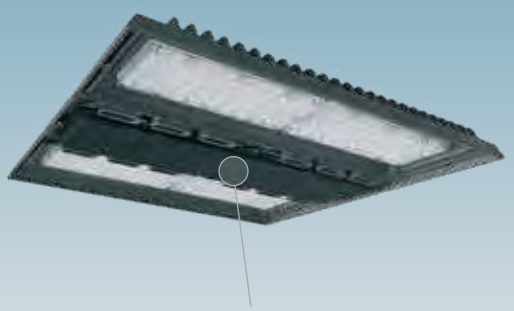

Light controller integrated inside the fixture

Astro Q with DISMART 2.0

To set up a **DISMART 2.0** system, you will need to order the following products:

1) WIRELESS luminaire complete with **light controller** module with **subcode -24**

2) Gateway module with code **81410011** that will generate the Wi-Fi local network

3) DALI2 sensor interface or N.O. buttons in IP65 box with code **81410014**

4) DIMM DALI/DALI2 luminaire with **subcode -0041,** dwhich will be associated to the **DISMART 2.0** interface in IP65 box with code **81410013**

5) Free App for mobile devices for complete system management and parameter configuration

DISMART 2.0 - A wireless lighting management system designed for installers and end users, while also supporting designers thanks to its easy integration into lighting installations and compliance with minimum environment criteria (CAMs) for public spaces.

The system is controlled through a simple, user-friendly app and requires no qualified personnel for setup, optimising energy savings and enhancing visual comfort.

It applies mainly to the following sectors: **INDUSTRIAL, LOGISTICS, INDOOR SPORTS.**

CONNECTED AND READY FOR USE IN 3 SIMPLE STEPS



1 **DOWNLOAD:** download the free version of the iOS/Andorid app

2 **SET UP:** connect to the gateway of your mobile phone/tablet, then add lamps/sensors/buttons (via QR code)

3 **MANAGE:** you can create groups and set up control for the lights in each room.

EXAMPLE OF USE

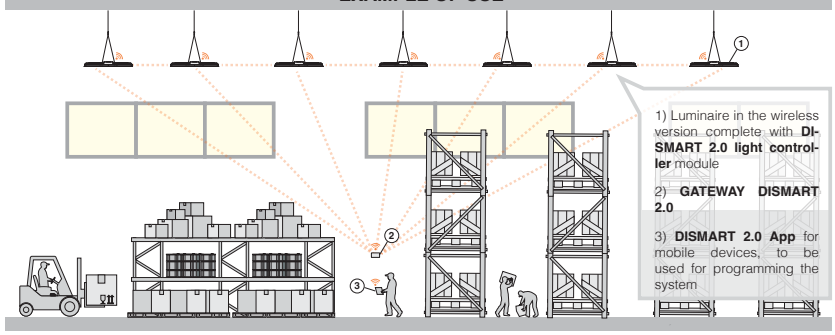

DISMART DISMART 2.0 – Radiofrequency mesh network communication

ZHAGA SOCKET



Astro Q with Zagha Socket

Zhaga **Upon request with subcode -0054**: Astro Q designed to accept **Zhaga Socket.**

Thanks to the **Zhaga socket**, the end user can easily install any type of controller (to be purchased separately) turning the fixture into a **SMART** fixture and therefore capable of being managed with the most common lighting control systems available on the market. This type of solution is ideal in industrial environments where constant light and motion control are required.

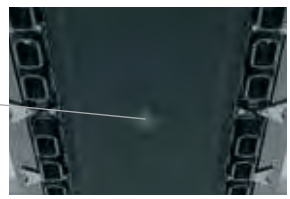

Main characteristics of the **Zhaga socket**:
- Standard interface for all wireless networks
- 24Vdc power, not prone to spikes/overvoltage
- Simple and fast installation of wireless controller
- Ready network: the initial wireless installation and successive update through a wireless network controller
- Quick and simple management of the wireless controller

The socket provides electrical and mechanical connection between the sensor and the fixture necessary to manage industrial lights effectively and efficiently.

Advantages:

- Easy tool-free mounting. The module is attached and secured with a bayonet clamp
- Compact dimensions for greater design flexibility
- The special (push-in) contacts reduce logistics problems arising from the need to use cables with various lengths for different lighting fixtures
- Single built-in seal that protects both the fixture and the modules, minimizing mounting times.

EXAMPLE OF REQUEST: TECHNICAL CHARACTERISTICS	
Mains voltage	220-240 Vac - 50/60Hz
Frequency	5.8GHz±75MHz
Detection angle	ceiling: 360°
Detection area	8m max. (adjustable)
Installation height	ceiling: 15 m max.
Energy consumption	≤ 0.3W (standby)
Operating temperature (sensor)	-35 ... +70 °C



Exemple with Zhaga Socket (subcode -0054) and sensor

PARAMETERS SETTINGS	
Detection area	25% / 50% /75% /100%
Stand-by time	0s /10s/ 1min / 3min / 5min / 10min / 30min / +∞
Ambient light (adjustable)	Threshold :5lux /15lux / 30lux / 50lux /100lux /150lux / Disable Priority: ON/OFF (5lux / 15lux / 30Lux / 50lux) / 150lux 100lux / 200lux 150lux / 300lux
Hold Time (adjustable)	5s / 30s /1min / 3min / 5min / 10min / 20min / 30min
Stand-by dimming level	10% / 20% / 30% / 50%

Presence and light sensor - STAND-ALONE

Upon request with subcode -1219: Astro Q comes with **stand-alone** presence and light sensor with 0-10V control

TECHNICAL CHARACTERISTICS	
Mains voltage	220-240 Vac - 50/60Hz
Frequency	5.8GHz±75MHz
Detection angle	ceiling: 360°
Detection area	8-14m max (adjustable)
Installation height	ceiling: 12 m (≤ 15 m max.)
Energy consumption	≤ 0.5W (stand-by)
Technology	Microwave
Sensor operating temperature	-20 ... +70 °C

(Optional cod. **81418618**) remote control to change parameters after installation, without opening the fixture



Sensor integrated inside the fixture


If the sensor does not detect motion, lights stay on constant for a pre-set time.


As soon as the sensor detects motion in the scan area, lights will automatically increase to 100%.


If no motion is detected after a certain amount of time, the sensor will dim back to the set level.

PARAMETERS SETTINGS WITH REMOTE CONTROL	
Technology	Remote control (optional)
Detection area	100% / 75% / 50% / 25%
Motion detection speed	0,5~1,5m/s
Hold time (adjustable)	5s / 30s / 1min/ 3min / 5min / 10min / 20min / 30min
Ambient light (adjustable)	2lux / 10lux /30lux / 50lux / 80lux / 120lux / OFF
Stand-by dimming level (adjustable)	10% / 20% / 30% / 50%

Presence and light sensors - DIMM DALI

Upon request with subcode -0061: Astro Q DALI version with easy-to-use, safe and convenient automatic presence and light sensor.

TECHNICAL SPECIFICATIONS		
Rated supply voltage	220-240 Vac - 50/60Hz	
Power consumption	2 W	
Output, stand-by	0,5 W	
Operating temperature (sensor)	0 ... +60 °C	
IP degree	IP65	
Time delay (regolabile)	min: 30sec - max: 60min	
Technology	PIR	
Max. installation height	* 16m	
Light detection angle	13 °	
Motion detection angle	high	low
	72°	60°
Momentary-action switch input for on/off switching and dimming		

All functions can be set by request or with the (optional cod. **81420111**) remote control



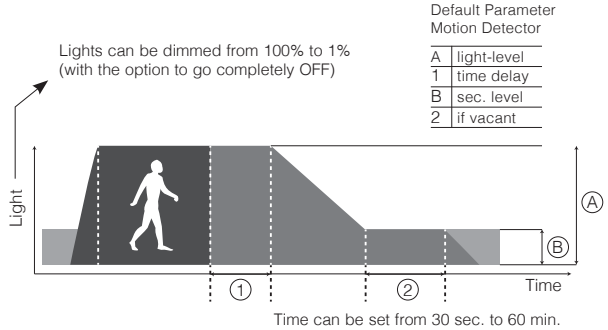

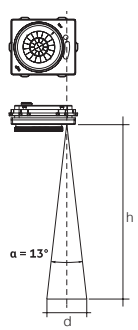

h	d
8 m	1.8 m
10 m	2.3 m
12 m	2.7 m
14 m	3.2 m
16 m	3.7 m
18 m*	4.2 m

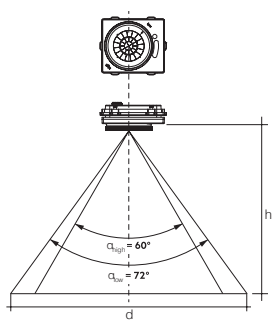

h	Zoom	d
8 m	low	12.0 m
9 m	low	13.5 m
10 m	low	15.0 m
11 m	low	16.5 m
12 m	low	18.0 m
12 m	high	14.0 m
13 m	high	15.2 m
14 m	high	16.4 m
15 m	high	17.6 m
16 m	high	18.8 m
17 m	high	19.8 m
18 m*	high	21.0 m

* **Upon request with subcode -0062:** version available for 10m max recommended height installation (please contact our customer service when ordering/purchasing the fixture).



GENERAL CHARACTERISTICS

Housing: in die-cast aluminium with cooling fins.

Optics: polycarbonate with concentric rings.

Coating: the fully automated powder-coating cycle involves a polyester-based, salt-spray corrosion-resistant and UV-stabilised paint.

Equipment: the fixture is equipped with waterproof connector for quick installation; external screws and bolts in stainless steel.

SURGE

Electronic safety device to protect the LED module and the related ballast compliant with EN 61547.
It works in two modes:
- differential mode: surge between power cables and between the phase and neutral.
- common mode: surge between power, L/N and ground cables or between the fixture's body if it is of class II and installed on a metal pole.
Upon request: for **Class II** fixtures, protection up to 10KV.

OTHER CHARACTERISTICS



One attachment point: standard versions come with suspension foldable hook (180°).

The heat dissipation system was designed and manufactured to allow LED operation at adequate temperatures and guarantee excellent performance/efficiency and long life.

LOW FLICKER

Product with a very low flicker; uniform light for greater eye protection.

Version with optics in special polycarbonate material, **ideal for the food industry** with special processing methods (*contact the customer service to check compatibility between materials and food products*).

OTHER INFORMATION



Zhaga

Zhaga Socket 0-10V predispositon as standard**:** the end user can install any type of controller (to be purchased separately) turning the fixture into a **SMART** fixture and capable of being managed with the most common lighting control systems available on the market.



POWER SWITCH

POWER SWITCH standard version: in a single body frame, you have a fully equipped luminaire designed to meet any need; with integrated switch you can select the fixture's total wattage, maintaining aesthetic continuity and differentiating the amount of light emitted.

OTHER VERSION

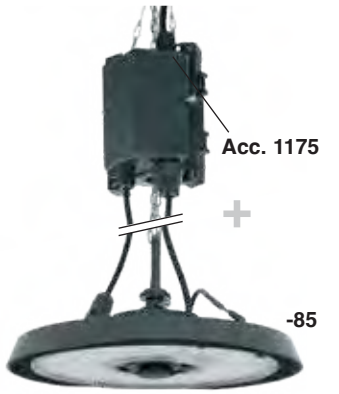

EM S.A.

Version with **EM**ergency predisposition with **sub-code -85** with a surcharge, to be always used with emergency box **acc. 1175** to be purchased separately.

acc. 1175 EMergency box	
1h	986605-00

IP65IK10

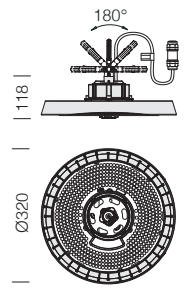

LED: power factor ≥0.95.
Luminous flux maintenance 80%: 100.000 (L80B10).
Luminous flux maintenance 90%: 50.000 (L90B10).



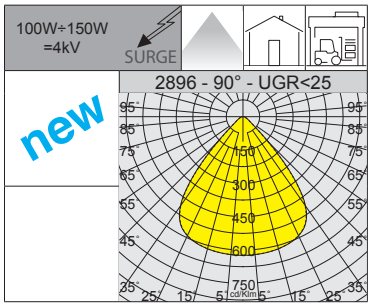

L80 B10 100.000h
L90 B10 50.000h
RG0
Ethr
+50 C° -40
U.V.
LOW FLICKER
POWER SWITCH

SUSPENSION

2896 Quasar - POWER SWITCH - 90° - UGR<25					
		CLD D (0-10V)			LUMEN OUTPUT (tq= 25 °C)
LED	colour	weight	code	W tot	K - ølm - CRI
LED	black	3.00	380092-00	**100**	4000K - **21655lm** - CRI 80
				120	4000K - **26000lm** - CRI 80
				150	4000K - **32170lm** - CRI 80
Quasar is designed to accept **Zhaga Socket 0-10V,** sensors to be purchased separately.					



Quasar with Zhaga Socket 0-10V

Zhaga **QUASAR** is designed to accept **Zhaga Socket 0-10V.**

Thanks to the **Zhaga socket**, the end user can easily install any type of controller (to be purchased separately) turning the fixture into a **SMART** fixture and therefore capable of being managed with the most common lighting control systems available on the market. This type of solution is ideal in industrial environments where constant light and motion control are required.

Main characteristics of the **Zhaga socket**:
- Standard interface for all wireless networks
- 12Vdc power, not prone to spikes/overvoltage
- Simple and fast installation of wireless controller
- Ready network: the initial wireless installation and successive update through a wireless network controller
- Quick and simple management of the wireless controller



MICROWAVE Sensor 0-10V
81412783
MICROWAVE 5.8GHz DIMM 0-10V presence and light sensor.

PARAMETERS SETTINGS				
Ambient light (threshold)	5/15/30/50/100/150lux - Disable			
Ambient light (priority)	ON	5/15/30/50lux	100lux	150lux
	OFF	150lux	200lux	300lux
Stand-by dimming level	10% / 20% / 30% / 50%			
Stand-by time	0/10s - 1/3/5/10/30min / +∞			
Hold time	5/30s - 1/3/5/10/20/30min			
Ambient temperature	-35 C° ÷ 60 C°			
Detection range (radius)	≥5 m (indoor - sensitivity 100%)			
Installing height	12 m (max 15 m)			

Remote control cod. **81412785** (to be purchased separately) that **allows changing the parameters even after installation is complete** and without the need to directly access the fixture.



MICROWAVE/CASAMBI sensor 0-10V
81412779
MICROWAVE/CASAMBI 5.8GHz 0-10V presence and light sensor.

PARAMETERS SETTINGS				
Ambient light (threshold)	5/15/30/50/100/150lux - Disable			
Ambient light (priority)	ON	5/15/30/50lux	100lux	150lux
	OFF	150lux	200lux	300lux
Stand-by dimming level	10% / 20% / 30% / 50%			
Stand-by time	0/10s - 1/3/5/10/30min / +∞			
Hold time	5/30s - 1/3/5/10/20/30min			
Ambient temperature	-35 C° ÷ 60 C°			
Detection range (radius)	≥5 m (indoor - sensitivity 100%)			
Installing height	12 m (max 15 m)			

APP With the App, available for Apple and Android smartphones, it is possible to set all operating parameters of wireless systems

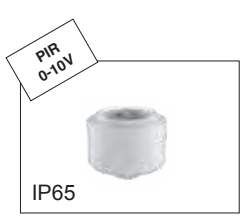

PIR Sensor 0-10V
81412782
DIMM 0-10V PIR presence and light sensor.

PARAMETERS SETTINGS				
Ambient light (threshold)	5/15/30/50/100/150lux - Disable			
Ambient light (priority)	ON	5/15/30/50lux	100lux	150lux
	OFF	150lux	200lux	300lux
Stand-by dimming level	10% / 20% / 30% / 50%			
Stand-by time	0/10s - 1/3/5/10/30min / +∞			
Hold time	5/30s - 1/3/5/10/20/30min			
Ambient temperature	-20 C° ÷ 55 C°			
Detection range (radius)	≥5 m (indoor - sensitivity 100%)			
Installing height	10 m (max 12m)			

Remote control cod. **81412785** (to be purchased separately) that **allows changing the81412785parameters even after installation is complete** and without the need to directly access the fixture.



PIR/CASAMBI Sensor 0-10V
81412319
PIR/CASAMBI DIMM 0-10V presence and light sensor.

PARAMETERS SETTINGS				
Luce ambiente (soglia)	5/15/30/50/100/150lux - Disable			
Luce ambiente (priorità)	ON	5/15/30/50lux	100lux	150lux
	OFF	150lux	200lux	300lux
Livello dimm. stand by	10% / 20% / 30% / 50%			
Periodo di stand-by	0/10s - 1/3/5/10/30min / +∞			
Hold time	5/30s - 1/3/5/10/20/30min			
Ambient temperature	-25 C° ÷ 55 C°			
Raggio rilevamento	≥5 m (indoor - sensitivity 100%)			
Installing height	10 m (max 12m)			

APP With the App, available for Apple and Android smartphones, it is possible to set all operating parameters of wireless systems



SKIRT FOR SATURNO Ø320

Saturno is the perfect alternative to get the best performance levels without wasting energy in environments where high power outputs are not needed. The reflector is built with carefully selected materials to last in time and designed to allow improved light control. In particular, the version with the opal or clear **Skirt** accessory is ideal to reduce direct glare and ensure a rating of **UGR<22**.

The **coloured** versions of the **Skirt** accessory are particularly suited to be combined with Saturno for interiors; ideal to be used as an aesthetic and decorating finishing element for the lighting systems of shopping centres or showrooms.







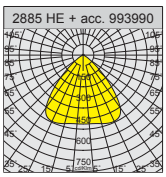

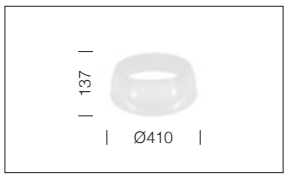

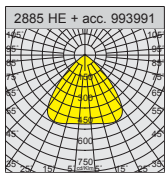



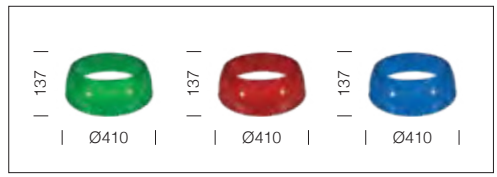

acc. 539 Skirt for Saturno Ø320	
opal	993990-00
In polycarbonate, internally grooved and anti-UV.	

acc. 539 Skirt for Saturno Ø320	
transparent	993991-00
In polycarbonate, internally grooved and anti-UV.	

acc. 539 Skirt for Saturno Ø320	
green	993992-00
red	993993-00
blue	993994-00
In polycarbonate, internally grooved and anti-UV.	

GENERAL CHARACTERISTICS

Housing: in die-cast aluminium with cooling fins integrated into the cover.

Diffuser: in clear polycarbonate, LEDs with protective lenses.

Coating: the fully automated powder-coating cycle involves a polyester-based, salt-spray corrosion-resistant and UV-stabilised paint.

Equipment: the fixture is equipped with air recirculation valve and waterproof connector for quick installation with **no need to open the fixture;** external screws and bolts in stainless steel.

SURGE Electronic safety device to protect the LED module and the related ballast compliant with EN 61547.

It works in two modes:
- differential mode: surge between power cables and between the phase and neutral.
- common mode: surge between power, L/N and ground cables or between the fixture's body if it is of class II and installed on a metal pole.

Upon request: for **Class II** fixtures, protection up to 10KV.

OTHER CHARACTERISTICS



One attachment point: standard versions come with suspension foldable hook (180°).



EM S.A. Version with **EM**ergency predisposition with **subcode -85** with a surcharge, to be always used with emergency box **acc. 1175** to be purchased separately.

acc. 1175 EMergency box	
1h	986605-00

OTHER INFORMATION



Zhaga **Zhaga Socket 0-10V** predispositon as standard**:** the end user can install any type of controller (to be purchased separately) turning the fixture into a **SMART** fixture and capable of being managed with the most common lighting control systems available on the market.

CCT POWER **CCT / POWER SWITCH** standard version: in a single body frame, you have a fully equipped luminaire designed to meet any need, including the possibility to select the desired colour temperature (3000K-4000K-5700K) in 3 power wattages, maintaining aesthetic continuity and differentiating the amount of light emitted.

Version with optics in special polycarbonate material, **ideal for the food industry** with special processing methods (*contact the customer service to check compatibility between materials and food products*).

UPON REQUEST

Possibility of centralized lighting point control or via **external** presence/lighting sensors (see chapter *Lighting management systems and recommendations*).

-0050 EM-EC Version **CLD EC** wiring with **subcode -0050:** permanently mounted fixture, operating in AC/DC mode, with centralized emergency device, not incorporated into the fixture.



ACCESSORIES



acc. 66 ±90/180° adjustable wall bracket	
RAL 7021	995692-00
To be installed on the driver; coated steel bracket with graduated scale to allow ±90/180° rotation of the fixture.	

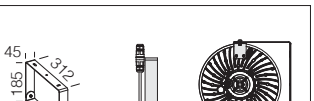

acc. 69 ±180° adjustable wall bracket	
RAL 7021	995693-00
To be installed on the housing; Coated steel bracket with graduated scale to allow ±90/180° rotation of the fixture.	

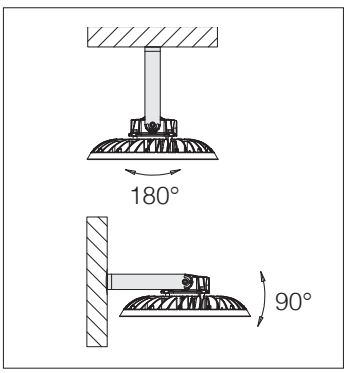

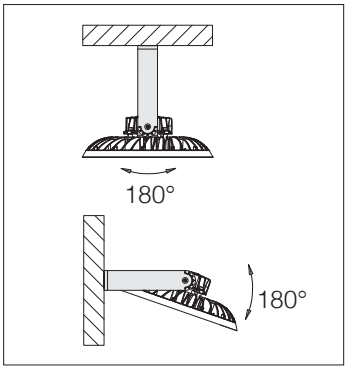



IP66IK10

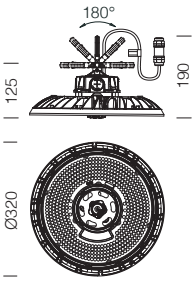



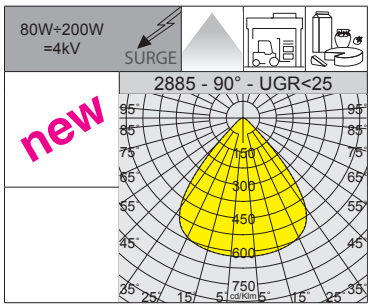

L80 B10 100.000h

L90 B10 50.000h

RGO Eff

+50 C° -40

U.V.

LOW FLICKER

POWER SWITCH

SUSPENSION

LED: power factor ≥0.95.
Luminous flux maintenance 80%: 100.000h (L80B10).
Luminous flux maintenance 90%: 50.000h (L90B10).

EM S.A. Version with **EM**ergency pre-disposition with **subcode -85** with a surcharge, to be always used with emergency box **acc. 1175** to be purchased separately.

acc. 1175 EMergency box	
1h	986605-00



SATURNO POWER SWITCH: in a single body frame, you have a fully equipped luminaire designed to meet any need; with integrated switch you can select the fixture's total wattage, maintaining aesthetic continuity and differentiating the amount of light emitted.

2885 Saturno - POWER SWITCH - 90° - UGR<25

		CLD D (0-10V)			LUMEN OUTPUT (tq= 25 °C)
LED	colour	weight	code	W tot	K - ølm - CRI
LED	RAL 7021	2.00	330785-00	80	4000K - **15343lm** - CRI 80
				100	4000K - **19010lm** - CRI 80
				120	4000K - **23011lm** - CRI 80
LED	RAL 7021	2.00	330786-00	100	4000K - **19010lm** - CRI 80
				125	4000K - **24814lm** - CRI 80
				150	4000K - **28100lm** - CRI 80
LED	RAL 7021	2.00	330787-00	110	4000K - **20255lm** - CRI 80
				150	4000K - **28100lm** - CRI 80
				200	4000K - **34470lm** - CRI 80

Standard luminaire configuration with power ratings of 100W - 150W - 200W. **Saturno** is designed to accept **Zhaga Socket 0-10V,** sensors to be purchased separately.



Satruno with Zhaga Socket 0-10V

Zhaga **SATURNO** is designed to accept **Zhaga Socket 0-10V.**

Thanks to the **Zhaga socket**, the end user can easily install any type of controller (to be purchased separately) turning the fixture into a **SMART** fixture and therefore capable of being managed with the most common lighting control systems available on the market. This type of solution is ideal in industrial environments where constant light and motion control are required.

Main characteristics of the **Zhaga socket**:
- Standard interface for all wireless networks
- 12Vdc power, not prone to spikes/overvoltage
- Simple and fast installation of wireless controller
- Ready network: the initial wireless installation and successive update through a wireless network controller
- Quick and simple management of the wireless controller



MICROWAVE Sensor 0-10V
81412783
MICROWAVE 5.8GHz DIMM 0-10V presence and light sensor.

PARAMETERS SETTINGS					
Ambient light (threshold)	5/15/30/50/100/150lux - Disable				
Ambient light (priority)	ON	5/15/30/50lux	100lux	150lux	
	OFF	150lux	200lux	300lux	
Stand-by dimming level	10% / 20% / 30% / 50%				
Stand-by time	0/10s - 1/3/5/10/30min / +∞				
Hold time	5/30s - 1/3/5/10/20/30min				
Ambient temperature	-35 C° ÷ 60 C°				
Detection range (radius)	≥5 m (indoor - sensitivity 100%)				
Installing height	12 m (max 15 m)				

Remote control cod. **81412785** (to be purchased separately) that **allows changing the parameters even after installation is complete** and without the need to directly access the fixture.



MICROWAVE/CASAMBI sensor 0-10V
81412779
MICROWAVE/CASAMBI 5.8GHz 0-10V presence and light sensor.

PARAMETERS SETTINGS					
Ambient light (threshold)	5/15/30/50/100/150lux - Disable				
Ambient light (priority)	ON	5/15/30/50lux	100lux	150lux	
	OFF	150lux	200lux	300lux	
Stand-by dimming level	10% / 20% / 30% / 50%				
Stand-by time	0/10s - 1/3/5/10/30min / +∞				
Hold time	5/30s - 1/3/5/10/20/30min				
Ambient temperature	-35 C° ÷ 60 C°				
Detection range (radius)	≥5 m (indoor - sensitivity 100%)				
Installing height	12 m (max 15 m)				

APP With the App, available for Apple and Android smartphones, it is possible to set all operating parameters of wireless systems



PIR Sensor 0-10V
81412782
DIMM 0-10V PIR presence and light sensor.

PARAMETERS SETTINGS					
Ambient light (threshold)	5/15/30/50/100/150lux - Disable				
Ambient light (priority)	ON	5/15/30/50lux	100lux	150lux	
	OFF	150lux	200lux	300lux	
Stand-by dimming level	10% / 20% / 30% / 50%				
Stand-by time	0/10s - 1/3/5/10/30min / +∞				
Hold time	5/30s - 1/3/5/10/20/30min				
Ambient temperature	-20 C° ÷ 55 C°				
Detection range (radius)	≥5 m (indoor - sensitivity 100%)				
Installing height	10 m (max 12m)				

Remote control cod. **81412785** (to be purchased separately) that **allows changing the81412785parameters even after installation is complete** and without the need to directly access the fixture.



PIR/CASAMBI Sensor 0-10V
81412319
PIR/CASAMBI DIMM 0-10V presence and light sensor.

PARAMETERS SETTINGS					
Luce ambiente (soglia)	5/15/30/50/100/150lux - Disable				
Luce ambiente (priorità)	ON	5/15/30/50lux	100lux	150lux	
	OFF	150lux	200lux	300lux	
Livello dimm. stand by	10% / 20% / 30% / 50%				
Periodo di stand-by	0/10s - 1/3/5/10/30min / +∞				
Hold time	5/30s - 1/3/5/10/20/30min				
Ambient temperature	-25 C° ÷ 55 C°				
Raggio rilevamento	≥5 m (indoor - sensitivity 100%)				
Installing height	10 m (max 12m)				

APP With the App, available for Apple and Android smartphones, it is possible to set all operating parameters of wireless systems


EBHMFMHQ4242
4144
64
104791
275
301
37
V-LIMIT ORDER 300 M/MIN

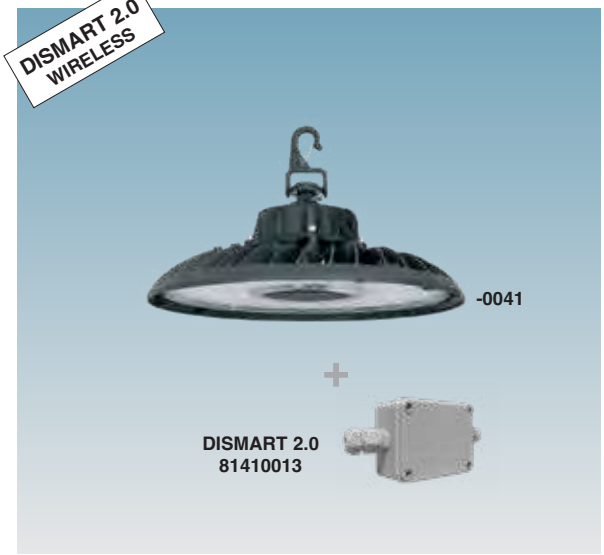

Saturno with DISMART 2.0

To set up a **DISMART 2.0** system, you will need to order the following products:
1) DIMM DALI/DALI2 luminaire with **subcode -0041,** dwhich will be associated to the **DISMART 2.0** interface in IP65 box with code **81410013**
2) Gateway module with code **81410011** that will generate the Wi-Fi local network
3) DALI2 sensor interface or N.O. buttons in IP65 box with code **81410014**
4) Free App for mobile devices for complete system management and parameter configuration

DISMART 2.0 - A wireless lighting management system designed for installers and end users, while also supporting designers thanks to its easy integration into lighting installations and compliance with minimum environment criteria (CAMs) for public spaces.

The system is controlled through a simple, user-friendly app and requires no qualified personnel for setup, optimising energy savings and enhancing visual comfort.

It applies mainly to the following sectors: **INDUSTRIAL, LOGISTICS, INDOOR SPORTS.**

CONNECTED AND READY FOR USE IN 3 SIMPLE STEPS



1 **DOWNLOAD:** download the free version of the iOS/Andorid app

2 **SET UP:** connect to the gateway of your mobile phone/tablet, then add lamps/sensors/buttons (via QR code)

3 **MANAGE:** you can create groups and set up control for the lights in each room.

EXAMPLE OF USE

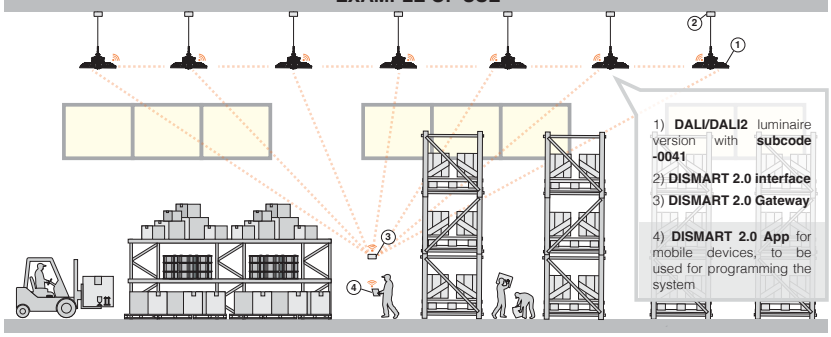

DISMART DISMART 2.0 – Radiofrequency mesh network communication

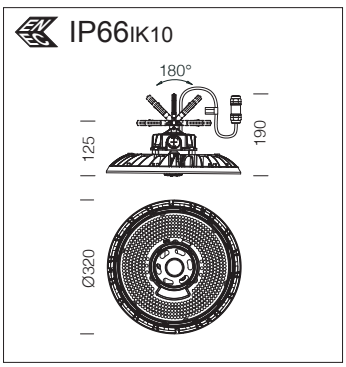

LED: power factor ≥0.95.
Luminous flux maintenance 80%: 100.000h (L80B10).
Luminous flux maintenance 90%: 50.000h (L90B10).



One attachment point: standard versions come with suspension foldable hook (180°).



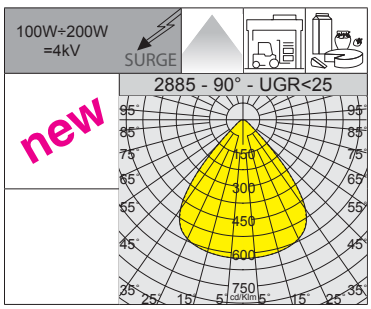

Version with optics in special polycarbonate material, **ideal for the food industry** with special processing methods (*contact the customer service to check compatibility between materials and food products*).

L80 B10 100.000h
L90 B10 50.000h
RGO Ethr
+50 C° -40
U.V.
DIMM DIG
LOW FLICKER

2885 Saturno DALI - 90° - UGR<25

		CLD D-D (DALI)			LUMEN OUTPUT (tq= 25 °C)
LED	colour	weight	code	W tot	K - ølm - CRI
LED	RAL 7021	2.00	330785-0041	**100**	4000K - **19010lm** - CRI 80
			330786-0041	**150**	4000K - **28100lm** - CRI 80
			330787-0041	**200**	4000K - **34470lm** - CRI 80


QUALITY
CHECK
POINT

IP65 IK10

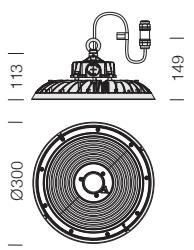



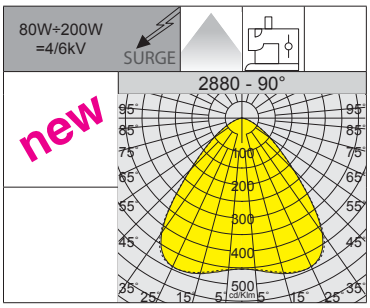

L80 B20 80.000h

L90 B10 50.000h

RG0 Ethr

+45 C° -30

U.V.

LOW FLICKER

CCT POWER

LED: power factor ≥0.95.
Luminous flux maintenance 80%: 80.000h (L80B20).
Luminous flux maintenance 90%: 50.000h (L90B10).

The CCT version is ideal for the **textile industry**. Its fast and precise colour temperature adjustment allows switching between warm, neutral, and cool light, optimising the colour rendering of fabrics at every stage of the manufacturing cycle, including quality control, colour matching, and specialised processes.

2880 Quark - CCT / POWER SWITCH - 90°

CLD				LUMEN OUTPUT (tq= 25 °C)	
LED	colour	weight	code	W tot	K - ølm - CRI
LED	RAL 7021	2.00	330935-00	**100**	3000K - **17456lm** - CRI 80
					4700K - **18375lm** - CRI 80
					6500K - **18375lm** - CRI 80
				150	3000K - **25436lm** - CRI 80
					4700K - **26775lm** - CRI 80
					6500K - **26775lm** - CRI 80
				200	3000K - **31920lm** - CRI 80
					4700K - **33600lm** - CRI 80
					6500K - **33600lm** - CRI 80



acc. 546 UGR<25 Reflector
993988-00
Pressed aluminium, anodised (3µ) and polished for higher luminous efficiency.

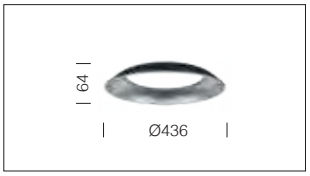

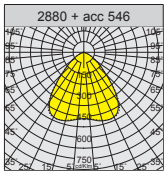

QUARK - CCT / POWER SWITCH: in a single body frame, you have a fully equipped luminaire designed to meet any need, including the possibility to select the desired colour temperature (3000K-4700K-6500K) in 3 power wattages, maintaining aesthetic continuity and differentiating the amount of light emitted.

CCT SWITCH = with this integrated switch you can select the desired light colour, 3000K-4700K-6500K.

POWER SWITCH = with this integrated switch you can select the fixture's total wattage, 100W - 150W - 200W.

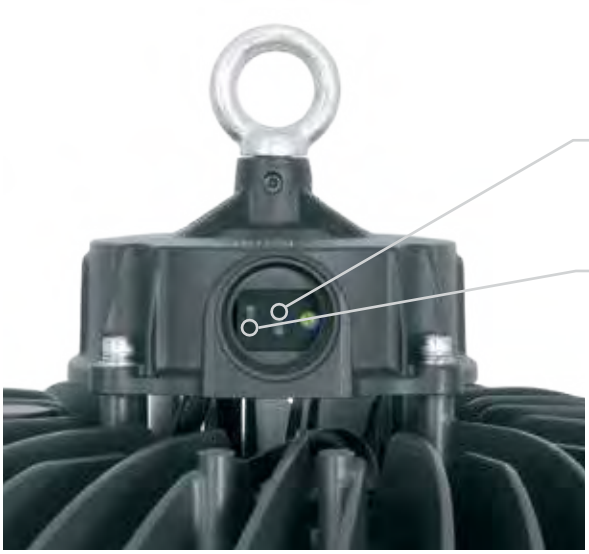

The main feature of this fixture is the new colour-changing technology. With **built-in switches** positioned on housing of the fixture, you can:

- select the type of brightness with 3 output power ranges :

Low = 100W Medium = 150W High = 200W

- select 3 different colour temperatures, adjusting to most installations:

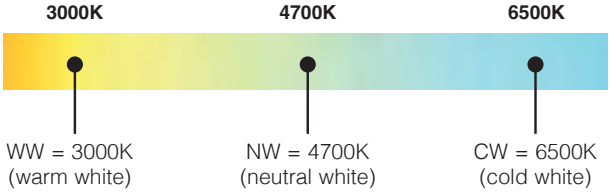

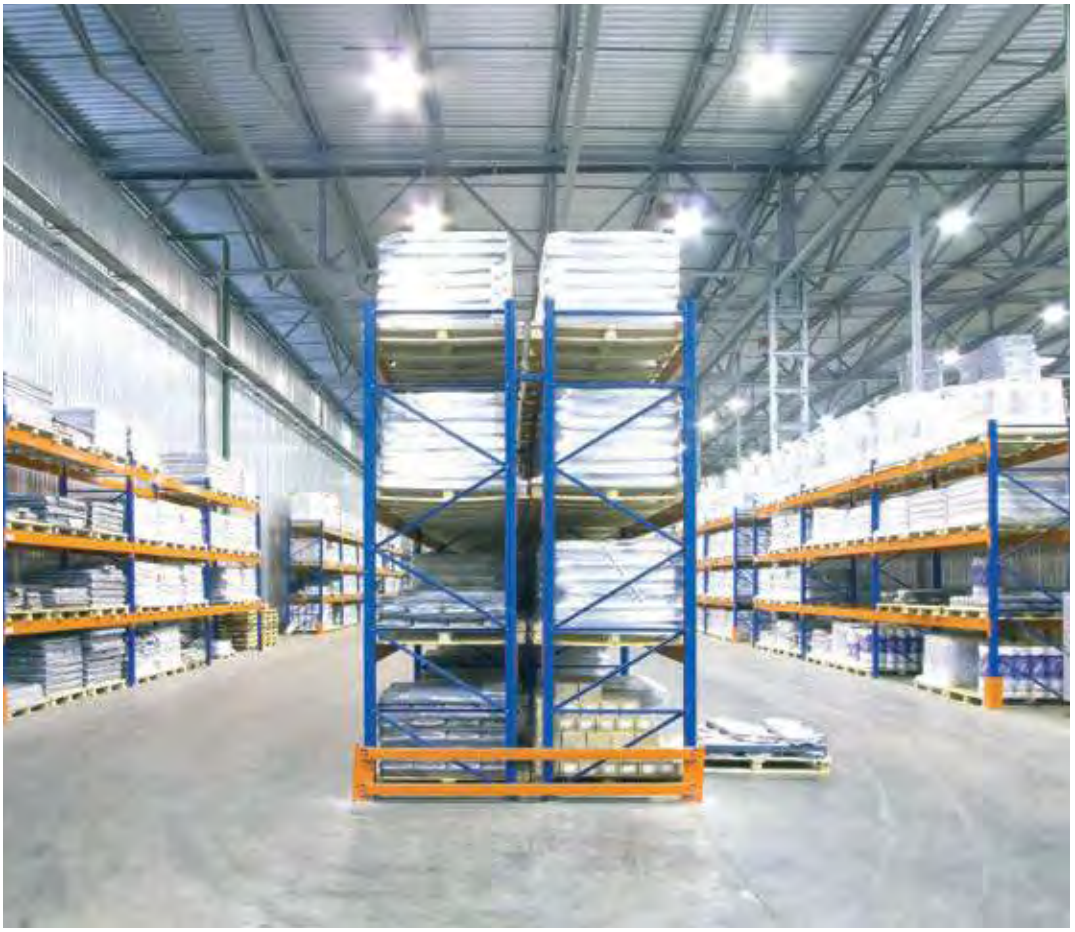

GENERAL CHARACTERISTICS

Housing: die-cast aluminium with wide cooling fins, complete with waterproof connector for quick installation.

Reflector: pressed prismatic aluminium, anodised (3µ) and polished for higher luminous efficiency.

Diffuser: 5 mm thick, thermal shock and impact resistant protective tempered glass and vandal resistant.

LED: power factor ≥0,95.
Luminous flux maintenance 80%: 90.000h (L80B10).
Luminous flux maintenance 70%: 100.000h (L70B50).

L80 B10 90.000h

L70 B50 100.000h

RG0 Ethr

+30 C° -20

U.V.

4000K

5000K

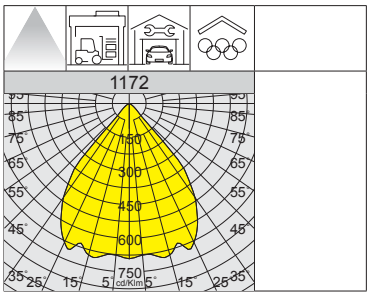



IP65 IK08

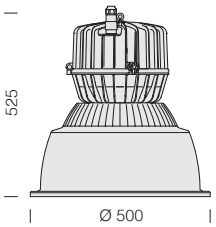

1172 Argon					
		CLD			LUMEN OUTPUT (tq= 25 °C)
LED	colour	weight	code	W tot	K - ølm - CRI
COB	grey	7.30	322652-00	115	5000K - 14200lm - CRI>70
			322653-00		4000K - 13500lm - CRI>80
Upon request: DIMM DALI and 1-10V versions.					



acc. 1122 protection guard	
0.60	321012-00
Black plastic-coated steel rod protection guard. Screw mounting.	

IP43IK08

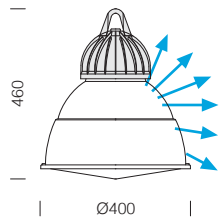



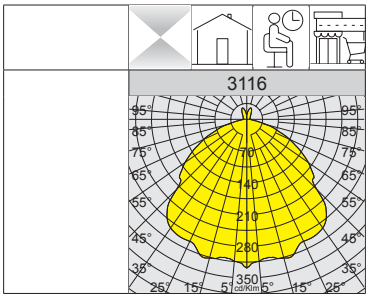

L80 B10 90.000h

L70 B50 100.000h

RG0 Ethr

U.V.

GENERAL CHARACTERISTICS

Housing: in die-cast aluminium, with wide cooling fins.

Diffuser: all in clear polycarbonate with anti-glare silking. Prismatic faceting inside for better light control.

LED: power factor ≥0,95.
Luminous flux maintenance 80%: 90.000h (L80B10).
Luminous flux maintenance 70%: 100.000h (L70B50).

3116 Ghost - prismatic diffuser

		CLD			LUMEN OUTPUT (tq= 25 °C)
LED	colour	weight	code	W tot	K - ølm - CRI
COB	grey	3.30	322928-00	**28**	4000K - 3840lm - CRI 80
			322929-00	**38**	4000K - 5230lm - CRI 80

IP43IK08

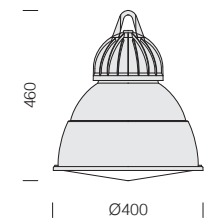



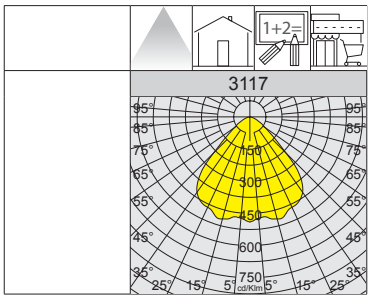

L80 B10 90.000h

L70 B50 100.000h

RG0 Ethr

U.V.

GENERAL CHARACTERISTICS

Housing: in die-cast aluminium, with wide cooling fins.

Diffuser: all in clear polycarbonate with anti-glare silking. Prismatic faceting inside for better light control. Smooth dust-proof and impact resistant finish outside, vandal-resistant and V2 self-extinguishing, UV-stabilised with a non-scratch and finger mark-proof.

LED: power factor ≥0,95.
Luminous flux maintenance 80%: 90.000h (L80B10).
Luminous flux maintenance 70%: 100.000h (L70B50).

3117 Ghost - painted diffuser

		CLD			LUMEN OUTPUT (tq= 25 °C)
LED	colour	weight	code	W tot	K - ølm - CRI
COB	grey	3.30	323128-00	**28**	4000K - 2620lm - CRI 80
			323129-00	**38**	4000K - 3750lm - CRI 80



CRIPTO

MICRO



SMALL



MEDIUM



BIG



Cripto intro p. 196
micro p. 198
small p. 200
medium p. 202
big p. 204

LITIO 2.0

SMALL



MEDIUM



MEDIUM



BIG



Litio 2.0 intro p. 210
small p. 211
medium p. 212
big p. 216

RODIO

MICRO RODIO



MINI RODIO



RODIO



RODIO



Micro Rodio p. 220
Mini Rodio p. 222
Rodio p. 226

MINI CROMO



CROMO



SATURNO



ASTRO



Mini Cromo p. 242
Cromo p. 250
Saturno p. 258
Astro p. 260

RADON







Radon intro p. 262
Radon HE - 1/2 modules p. 264
Radon HP - 1/2 modules p. 266
Radon HP - 3 modules p. 268

FORUM WITH GLASS







Forum intro p. 270
Forum - 1 module p. 272
Forum - 2 modules p. 280
Forum - 3 modules p. 288

FORUM 2.0





Forum 2.0 intro p. 294
Forum 2.0 - 2 modules p. 296
Forum 2.0 - 3 modules p. 304

SICURA



TUNNEL LED



Sicura p. 312
Tunnel LED p. 316



GENERAL CHARACTERISTICS

Housing: in die-cast aluminium with cooling fins.

Diffuser: tempered glass, 4 mm thick, resistant to thermal shock and impacts (UNI-EN 12150-1 : 2001).

Coating: the fully automated powder-coating cycle involves a polyester-based, salt-spray corrosion-resistant and UV-stabilised paint.

Standard Supply: complete with galvanised and coated bracket, and protractor scale. Aiming visor for precise aiming of the floodlight. Cripto micro and small with electrical cable (L = 1m). Cripto medium/big with double insulation switch.

OTHER CHARACTERISTICS

SURGE

Electronic safety device to protect the LED module and the related ballast compliant with EN 61547.
It works in two modes:
- differential mode: surge between power cables and between the phase and neutral.
- common mode: surge between power, L/N and ground cables or between the fixture's body if it is of class II and installed on a metal pole.

Upon request: protection up to 10KV (Cripto small,medium,big).

LOW FLICKER

Product with a very low flicker; uniform light for greater eye protection.

OTHER INFORMATION



Precision optics that allow broad design flexibility guaranteeing high levels of light quality.

RGBW DMX RDM

CRIPTO is also available in the RGBW - DMX/RDM version (see chapter *Lighting management systems - DMX solution for LED RGBW*).

UPON REQUEST

Possibility of centralized lighting point control or via **external** presence/lighting sensors (see chapter *Lighting management systems and recommendations*).

Protective coating recommended for marine environments within 5 km of the sea.

DIMM 1-10V

Version **CLD D (1/10V)** wiring with **subcode -12.**



ACCESSORIES

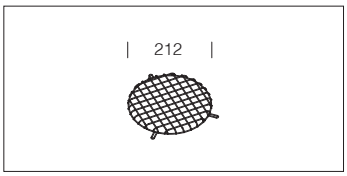

acc. 306 protection guard	
black	145515-00
Plastic-coated steel rod. For protection against impact of Cripto medium (except COB version).	

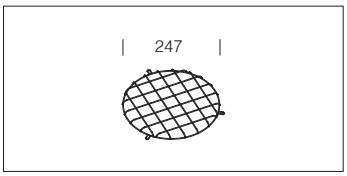

acc. 306 protection guard	
black	145516-00
Plastic-coated steel rod. For protection against impact of Cripto big with 12-25 LED (except COB version).	

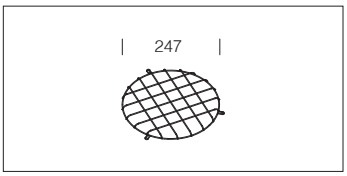

acc. 306 protection guard	
black	145517-00
Plastic-coated steel rod. For protection against impact of Cripto big with 16 LED (except COB version).	

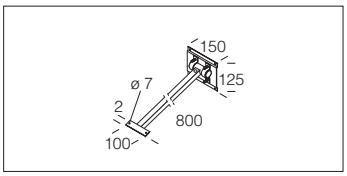

acc. 41 adjustable-angle arm	
graphite	995506-00
white	995508-00
Adjustable-angle arm galvanized steel. For Cripto micro.	

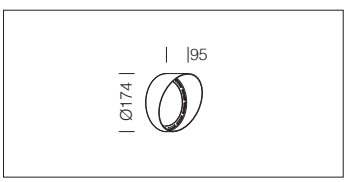

acc. 625 small conveyor	
graphite	145518-00
In aluminium. To be used for conveying the light beam in a single direction. For Cripto small.	

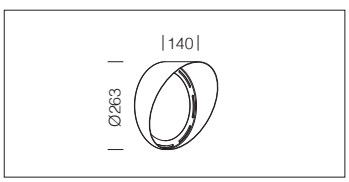

acc. 625 medium conveyor	
graphite	145519-00
In aluminium. To be used for conveying the light beam in a single direction. For Cripto medium.	

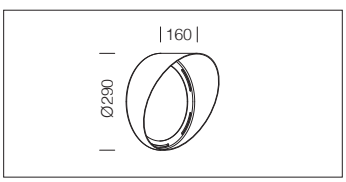

acc. 625 big conveyor	
graphite	145520-00
In aluminium. To be used for conveying the light beam in a single direction. For Cripto big.	



Upon request **Cripto big** supplied with a separate gear box for additional module of remote control system.



Built-in RADAR SENSOR (sub-code -19 at an extra price): is an automatic sensor that immediately sense the presence of people's movements and anyone walking past. When there is movement within the sensor's detection range, the light will remain ON. When no further movement is detected, the light will switch OFF after a pre-set time.

FACTORY SETTINGS	
Power supply	220-240V AC 50/60 Hz
Detection area	ceiling: 360°
Motion detection speed	0,5-1-1,5 m/s
Mounting height	ceiling: 2,5m÷3m
Energy consumption	<0,5 W (stand by)
Hold time	1 min
Ambient light	Disable

Remote control cod. **81418618** (to be purchased separately) that **allows changing the parameters even after installation is complete** and without the need to directly access the fixture.

RG0 Ethr

+40 C° -20

U.V.

LOW FLICKER

3000K

4000K

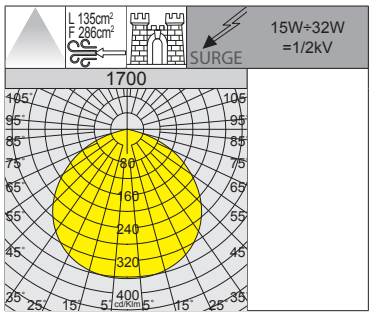



IP66IK09

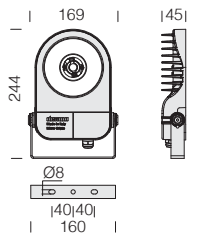

LED: power factor ≥0,92. Luminous flux maintenance:	
90%	50.000h (L90B10)
70%	100.000h (L70B50)

Reflector: in pre-anodised aluminium.

Equipment: complete with electrical cable for mains connection L=0,6m.

Upon request version with:
- **CLD D-D (DALI)** wiring with **sub-code -0041.**

***** 230V version with **built-in radar sensor**.

1700 Cripto micro - COB

		CLD			LUMEN OUTPUT (tq= 25 °C)
LED	colour	weight	code	W tot	K - ølm - CRI
COB	graphite	1.10	412960-00	**26**	4000K - 3537lm - CRI 80
	white		412963-00		
COB	graphite	1.10	412960-39	**26**	3000K - 3289lm - CRI 80
	white		412963-39		
COB	graphite	1.10	412962-00	**32**	4000K - 4393lm - CRI 80
	white		412964-00		
COB	graphite	1.10	412962-39	**32**	3000K - 4086lm - CRI 80
	white		412964-39		
230V					K - ølm 230V - CRI
COB *	graphite	1.10	412962-19	**15**	4000K - 1484lm - CRI 80
	white		412964-19		

IP66IK09

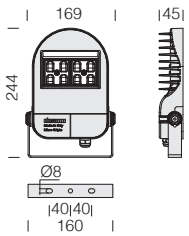

Optics: in high efficiency PMMA.

LED: power factor: ≥0,92. Luminous flux maintenance 90%: 100.000h (L90B10).

Equipment: complete with electrical cable for mains connection L=0,6m.

Upon request version with:
• **CLD D-D (DALI)** wiring with **subcode -0041.**

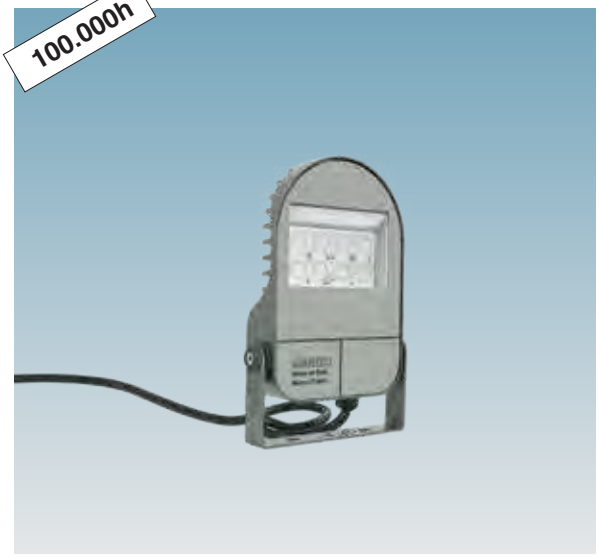

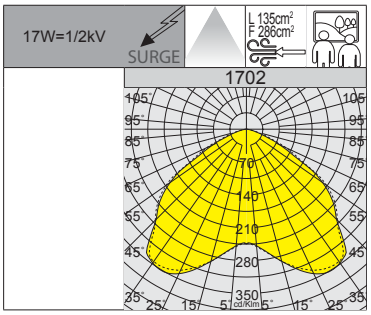

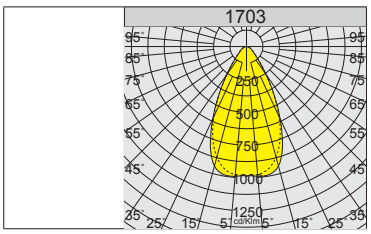

1702 Cripto micro - symmetric wide beam

		CLD			LUMEN OUTPUT (tq= 25 °C)
LED	colour	weight	code	W tot	K - ølm - CRI
LED	graphite	1.10	412975-00	**17**	4000K - 2010lm - CRI 80
	white		412976-00		
LED	graphite	1.10	412975-39	**17**	3000K - 1869lm - CRI 80
	white		412976-39		

1703 Cripto micro - symmetric narrow beam

		CLD			LUMEN OUTPUT (tq= 25 °C)
LED	colour	weight	code	W tot	K - ølm - CRI
LED	graphite	1.10	412980-00	**17**	4000K - 2049lm - CRI 80
	white		412981-00		
LED	graphite	1.10	412980-39	**17**	3000K - 1906lm - CRI 80
	white		412981-39		

IP66IK09

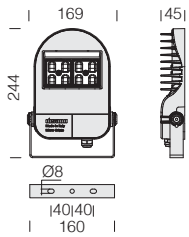

Optics: in high efficiency PMMA.

LED: power factor: ≥0,92. Luminous flux maintenance 90%: 100.000h (L90B10).

Equipment: complete with electrical cable for mains connection L=0,6m.

Upon request version with:
• **CLD D-D (DALI)** wiring with **subcode -0041.**



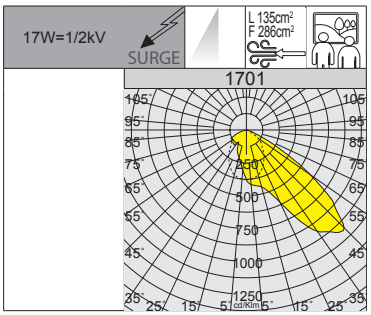

1701 Cripto micro - asymmetric

		CLD			LUMEN OUTPUT (tq= 25 °C)
LED	colour	weight	code	W tot	K - ølm - CRI
LED	graphite	1.10	412970-00	**17**	4000K - 2063lm - CRI 80
	white		412971-00		
LED	graphite	1.10	412970-39	**17**	3000K - 1919lm - CRI 80
	white		412971-39		

acc. 339 Connector (3-pole)

993854-00

To be used for mains connection of Cripto micro.

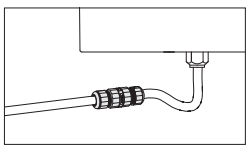

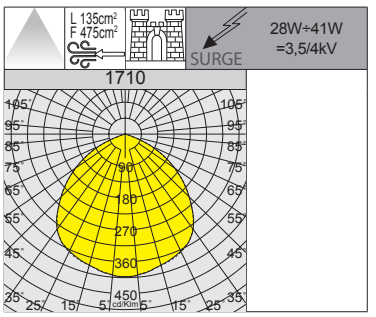



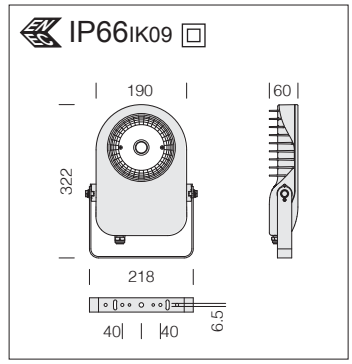

LED: power factor ≥0,92. Luminous flux maintenance:	
90%	50.000h (L90B10)
70%	100.000h (L70B50)

Reflector: in pre-anodised aluminium.

Equipment: complete with electrical cable for mains connection.

Note: when ordering, make sure you select the **AMBER LED** type best suited for your lighting design and installation needs.

1710 Cripto small AMBER - wide beam

		CLD			LUMEN OUTPUT (tq= 25 °C)
LED	colour	weight	code	W tot	K - ølm - CRI
COB AMBER	graphite	2.20	413000-73	**28**	2200K - 3264lm - **AMBER**
	grey		413001-73		
	white		413002-73		
	RAL 7021		413003-73		
COB AMBER	graphite	2.20	413050-73	**41**	2200K - 4453lm - **AMBER**
	grey		413051-73		
	white		413054-73		
	RAL 7021		413056-73		

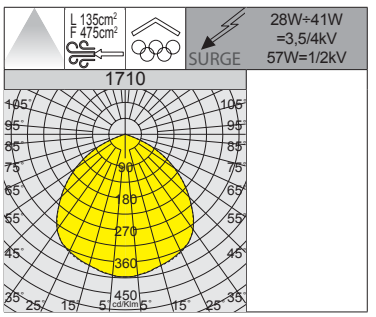



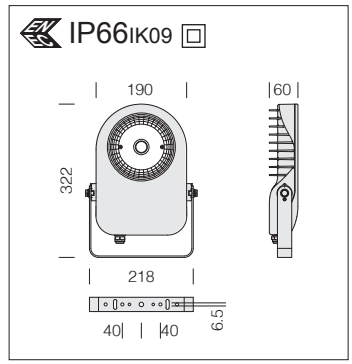

Upon request: 3000K (subcode -39)	
W tot	**LUMEN OUTPUT (tq= 25 °C)**
28	3000K - 2838lm
41	3000K - 4178lm
57	3000K - 5601lm

LED: power factor ≥0,92. Luminous flux maintenance:	
90%	50.000h (L90B10)
70%	100.000h (L70B50)

Reflector: in pre-anodised aluminium.

Equipment: complete with electrical cable for mains connection.

1710 Cripto small - wide beam

		CLD			LUMEN OUTPUT (tq= 25 °C)
LED	colour	weight	code	W tot	K - ølm - CRI
COB	graphite	2.20	413000-00	**28**	4000K - 3571lm - CRI 80
	grey		413001-00		
	white		413002-00		
	RAL 7021		413003-00		
COB	graphite	2.20	413050-00	**41**	4000K - 5257lm - CRI 80
	grey		413051-00		
	white		413054-00		
	RAL 7021		413056-00		
COB	graphite	2.20	413052-00	**57**	4000K - 7047lm - CRI 80
	grey		413053-00		
	white		413055-00		
	RAL 7021		413057-00		

IP66 IK09

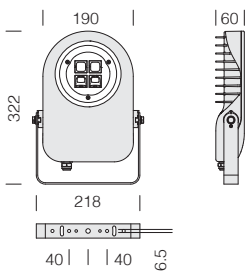



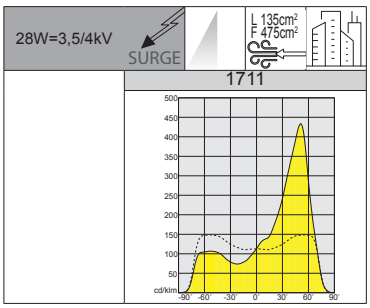

Optics: in PMMA, highly resistant to temperature and UV radiation. Flow recovery in V0 polycarbonate.

LED: power factor: ≥0,9. Luminous flux maintenance 90%: 100.000h (L90B10).

Equipment: complete with electrical cable for mains connection.

1711 Cripto small - asymmetric

		CLD			LUMEN OUTPUT (tq= 25 °C)
LED	colour	weight	code	W tot	K - ølm - CRI
LED	graphite	2.20	413010-00	**28**	4000K - 3570lm - CRI 80
	grey		413011-00		
	RAL 7021		413012-00		
LED	graphite	2.20	413010-39	**28**	3000K - 3320lm - CRI 80
	grey		413011-39		
	RAL 7021		413012-39		

IP66 IK09

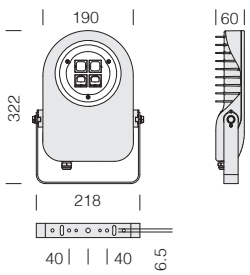



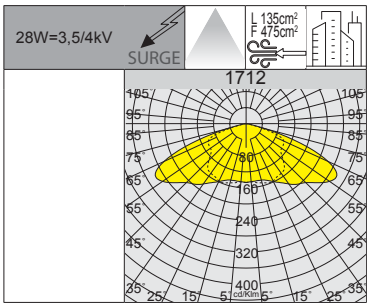

Optics: in PMMA, highly resistant to temperature and UV radiation. Flow recovery in V0 polycarbonate.

LED: power factor: ≥0,9. Luminous flux maintenance 90%: 100.000h (L90B10).

Equipment: complete with electrical cable for mains connection.

1712 Cripto small - symmetric

		CLD			LUMEN OUTPUT (tq= 25 °C)
LED	colour	weight	code	W tot	K - ølm - CRI
LED	graphite	2.20	413020-00	**28**	4000K - 3537lm - CRI 80
	grey		413021-00		
	RAL 7021		413022-00		
LED	graphite	2.20	413020-39	**28**	3000K - 3289lm - CRI 80
	grey		413021-39		
	RAL 7021		413022-39		

acc. 339 Connector

993836-00

To be used for mains connection of Cripto small.

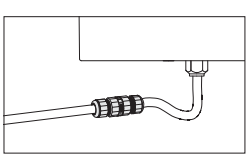



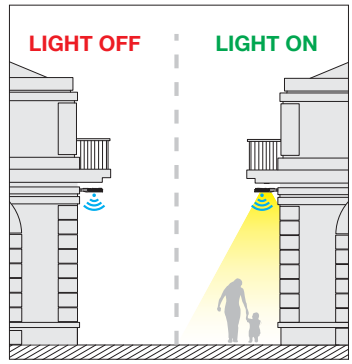

Built-in RADAR SENSOR (sub-code -19 at an extra price): is an automatic sensor that immediately sense the presence of people's movements and anyone walking past. When there is movement within the sensor's detection range, the light will remain ON. When no further movement is detected, the light will switch OFF after a pre-set time.

RG0 Ethr

+40 C° -20

U.V.

180°

LOW FLICKER

3000K

4000K

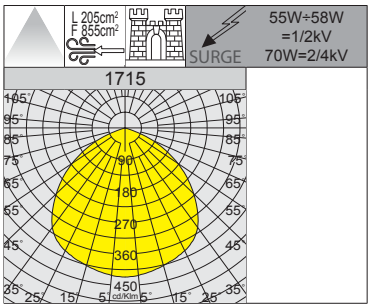



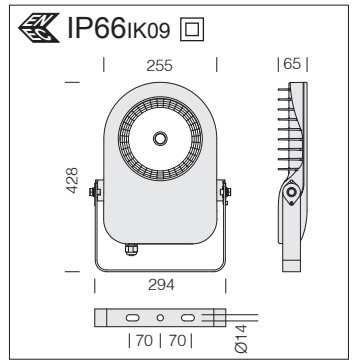

LED: power factor ≥0,92. Luminous flux maintenance:	
90%	50.000h (L90B10)
70%	100.000h (L70B50)

Reflector: in pre-anodised aluminium.

Note: when ordering, make sure you select the **AMBER LED** type best suited for your lighting design and installation needs.

1715 Cripto medium - wide beam

		CLD			LUMEN OUTPUT (tq= 25 °C)
LED	couleur	weight	code	W tot	K - ølm - CRI
COB	graphite	4.00	413062-00	**55**	4000K - 8134lm - CRI 80
	grey		413063-00		
	graphite	4.00	413062-39		3000K - 7565lm - CRI 80
	grey		413063-39		
COB AMBER	graphite	4.00	413060-73	**58**	2200K - 6149lm - **AMBER**
	grey		413061-73		
COB	graphite	4.00	413064-00	**70**	4000K - 11344lm - CRI 80
	grey		413065-00		
	graphite	4.00	413064-39		3000K - 10550lm - CRI 80
	grey		413065-39		

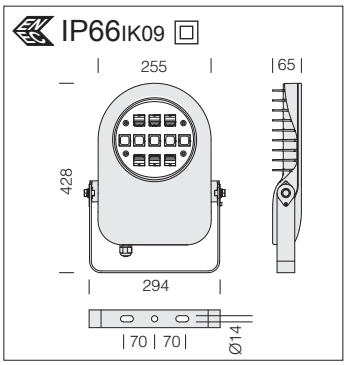

Optics: in PMMA, highly resistant to temperature and UV radiation. Flow recovery in V0 polycarbonate.

LED: power factor: ≥0,9.
Luminous flux maintenance 90%: 100.000h (L90B10).



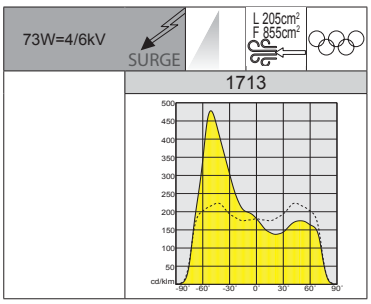

1713 Cripto medium - asymmetric

		CLD			LUMEN OUTPUT (tq= 25 °C)
LED	colour	weight	code	W tot	K - ølm - CRI
LED	graphite	4.90	413030-00	**73**	4000K - 9188lm - CRI 80
	grey		413031-00		
LED	graphite	4.90	413030-39	**73**	3000K - 8545lm - CRI 80
	grey		413031-39		

Example	Power supply	W tot	K	ølm
upon request	350mA	**46**	**4000K**	5847lm

W tot	K	ølm
46	**3000K**	5438lm

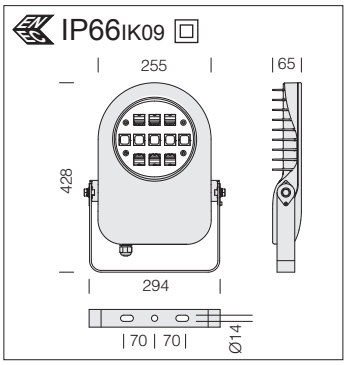

Optics: in PMMA, highly resistant to temperature and UV radiation. Flow recovery in V0 polycarbonate.

LED: Power factor: ≥0,9.
Luminous flux maintenance 90%: 100.000h (L90B10).



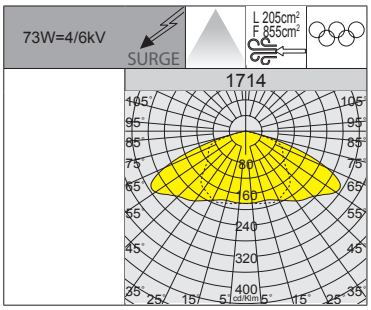

1714 Cripto medium - symmetric

		CLD			LUMEN OUTPUT (tq= 25 °C)
LED	colour	weight	code	W tot	K - ølm - CRI
LED	graphite	4.90	413040-00	**73**	4000K - 9661lm - CRI 80
	grey		413041-00		
LED	graphite	4.90	413040-39	**73**	3000K - 8985lm - CRI 80
	grey		413041-39		

Example	Power supply	W tot	K	ølm
upon request	350mA	**46**	**4000K**	6148lm

W tot	K	ølm
46	**3000K**	5718lm

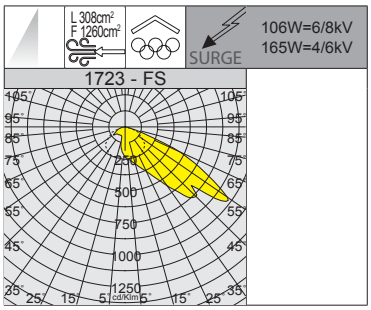



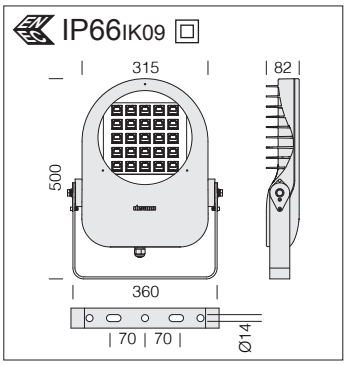

Optics: in PMMA, highly resistant to temperature and UV radiation. Flow recovery in V0 polycarbonate.

LED: power factor: ≥0,9.
Luminous flux maintenance 90%: 100.000h (L90B10).

Installation is recommended in places where the ambient temperature is:
max 40° C - outdoor
max 30° C – indoor

1723 Cripto big - asymmetric - FS

		CLD			LUMEN OUTPUT (tq= 25 °C)
LED	colour	weight	code	W tot	K - ølm - CRI
LED	graphite	7.60	413070-00	**106**	4000K - 13161lm - CRI 80
	grey		413074-00		
LED	graphite	7.60	413070-39	**106**	3000K - 12240lm - CRI 80
	grey		413074-39		
LED	graphite	8.00	413071-00	**165**	4000K - 20565lm - CRI 80
	grey		413075-00		
LED	graphite	8.00	413071-39	**165**	3000K - 19125lm - CRI 80
	grey		413075-39		

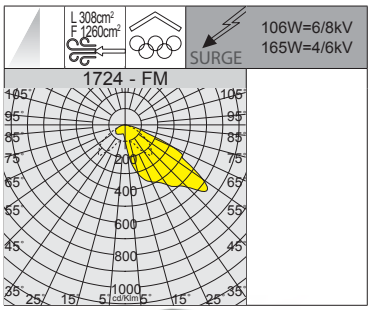





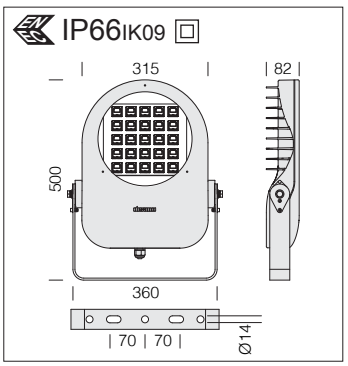

Optics: in PMMA, highly resistant to temperature and UV radiation. Flow recovery in V0 polycarbonate.

LED: power factor: ≥0,9.
Luminous flux maintenance 90%: 100.000h (L90B10).

Installation is recommended in places where the ambient temperature is:
max 40° C - outdoor
max 30° C – indoor

1724 Cripto big - asymmetric - FL

		CLD			LUMEN OUTPUT (tq= 25 °C)
LED	colour	weight	code	W tot	K - ølm - CRI
LED	graphite	7.60	413080-00	**106**	4000K - 13724lm - CRI 80
	grey		413084-00		
LED	graphite	7.60	413080-39	**106**	3000K - 12763lm - CRI 80
	grey		413084-39		
LED	graphite	8.00	413081-00	**165**	4000K - 21444lm - CRI 80
	grey		413085-00		
LED	graphite	8.00	413081-39	**165**	3000K - 19943lm - CRI 80
	grey		413085-39		

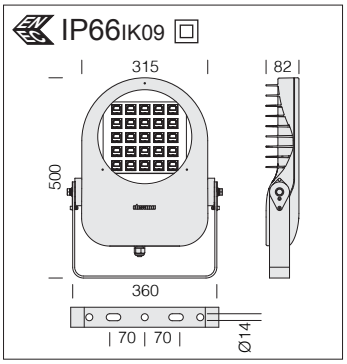



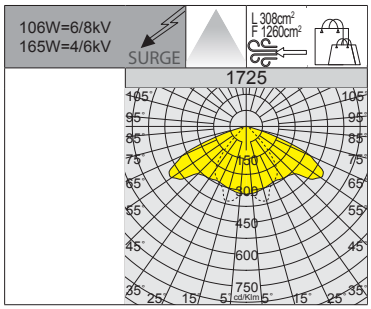



Optics: in PMMA, highly resistant to temperature and UV radiation. Flow recovery in V0 polycarbonate.

LED: power factor: ≥0,9. Luminous flux maintenance 90%: 100.000h (L90B10).

Installation is recommended in places where the ambient temperature is:
max 40° C - outdoor
max 30° C – indoor

1725 Cripto big - symmetric

		CLD			LUMEN OUTPUT (tq= 25 °C)
LED	colour	weight	code	W tot	K - ølm - CRI
LED	graphite	7.60	413090-00	**106**	4000K - 14053lm - CRI 80
	grey		413094-00		
LED	graphite	7.60	413090-39	**106**	3000K - 13069lm - CRI 80
	grey		413094-39		
LED	graphite	8.00	413091-00	**165**	4000K - 21916lm - CRI 80
	grey		413095-00		
LED	graphite	8.00	413091-39	**165**	3000K - 20382lm - CRI 80
	grey		413095-39		

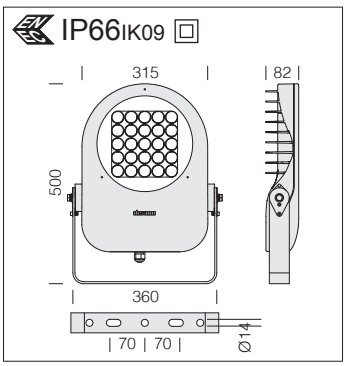



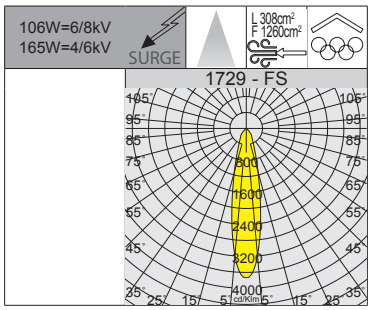



Optics: in PMMA, highly resistant to temperature and UV radiation. Flow recovery in V0 polycarbonate.

LED: power factor: ≥0,9. Luminous flux maintenance 90%: 100.000h (L90B10).

Installation is recommended in places where the ambient temperature is:
max 40° C - outdoor
max 30° C – indoor

1729 Cripto big - symmetric 20° - FS

		CLD			LUMEN OUTPUT (tq= 25 °C)
LED	colour	weight	code	W tot	K - ølm - CRI
LED	graphite	7.60	413170-00	**106**	4000K - 15177lm - CRI 80
	grey		413174-00		
LED	graphite	7.60	413170-39	**106**	3000K - 14115lm - CRI 80
	grey		413174-39		
LED	graphite	8.00	413171-00	**165**	4000K - 23803lm - CRI 80
	grey		413175-00		
LED	graphite	8.00	413171-39	**165**	3000K - 22137lm - CRI 80
	grey		413175-39		



















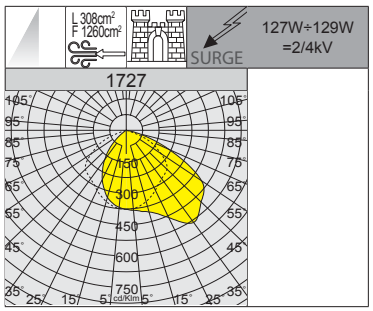



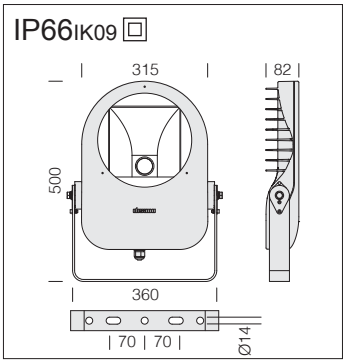

LED: power factor ≥0,92. Luminous flux maintenance:	
90%	50.000h (L90B10)
70%	100.000h (L70B50)

Reflector: asymmetric and faceted, made from aluminium 99.98.

Note: when ordering, make sure you select the **AMBER LED** type best suited for your lighting design and installation needs.

1727 Cripto big - asymmetric

		CLD			LUMEN OUTPUT (tq= 25 °C)
LED	colour	weight	code	W tot	K - ølm - CRI
COB	graphite	6.00	413150-00	**129**	4000K - 15528lm - CRI 80
	grey		413152-00		
COB	graphite	6.00	413150-39	**129**	3000K - 14063lm - CRI 80
	grey		413152-39		
COB AMBER	graphite	6.00	413150-73	**127**	2200K - 14266lm - **AMBER**
	grey		413152-73		



















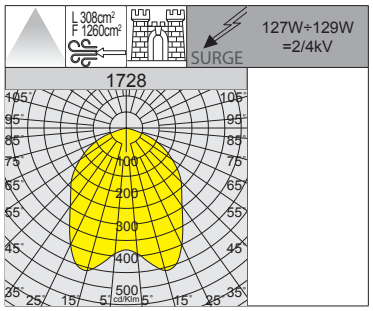



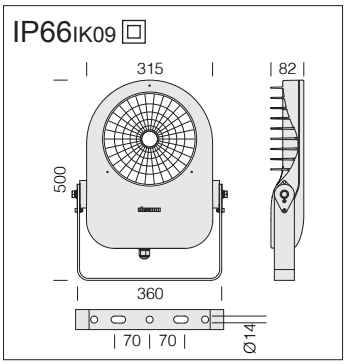

LED: power factor ≥0,92. Luminous flux maintenance:	
90%	50.000h (L90B10)
70%	100.000h (L70B50)

Reflector: in pre-anodised aluminium.

Note: when ordering, make sure you select the **AMBER LED** type best suited for your lighting design and installation needs.

1728 Cripto big - wide beam

		CLD			LUMEN OUTPUT (tq= 25 °C)
LED	colour	weight	code	W tot	K - ølm - CRI
COB	graphite	6.00	413160-00	**129**	4000K - 14984lm - CRI 80
	grey		413162-00		
COB	graphite	6.00	413160-39	**129**	3000K - 13935lm - CRI 80
	grey		413162-39		
COB AMBER	graphite	6.00	413160-73	**127**	2200K - 13767lm - **AMBER**
	grey		413162-73		

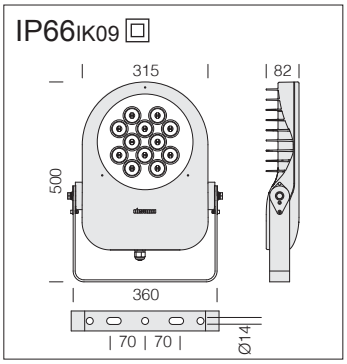

Optics: in high-performance metallic V2 polycarbonate with micro-faceted finish.

LED: power factor: ≥0,92.
Luminous flux maintenance 90%: 100.000h (L90B10).



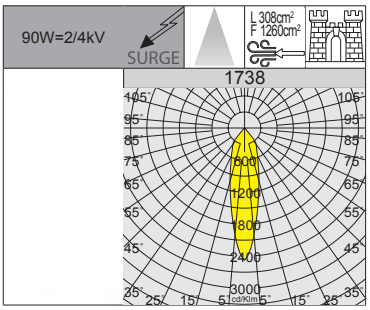



1738 Cripto big - 24°

		CLD			LUMEN OUTPUT (tq= 25 °C)
LED	colour	weight	code	W tot	K - ølm - CRI
LED	graphite	7.60	413180-00	**90**	4000K - 6511lm - CRI 80
	grey		413181-00		
LED	graphite	7.60	413180-39	**90**	3000K - 6055lm - CRI 80
	grey		413181-39		

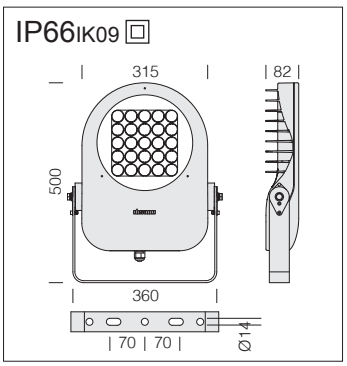

Optics: made of PMMA with high temperature resistance and UV rays.

LED: power factor: ≥0,92.
Luminous flux maintenance 90%: 100.000h (L90B10).



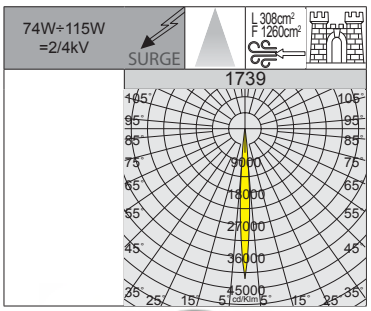



1739 Cripto big - 7°

		CLD			LUMEN OUTPUT (tq= 25 °C)
LED	colour	weight	code	W tot	K - ølm - CRI
LED	graphite	7.60	413190-00	**74**	4000K - 5872lm - CRI 80
	grey		413191-00		
LED	graphite	7.60	413190-39	**74**	3000K - 5461lm - CRI 80
	grey		413191-39		
LED	graphite	8.00	413192-00	**115**	4000K - 9176lm - CRI 80
	grey		413193-00		
LED	graphite	8.00	413192-39	**115**	3000K - 8534lm - CRI 80
	grey		413193-39		



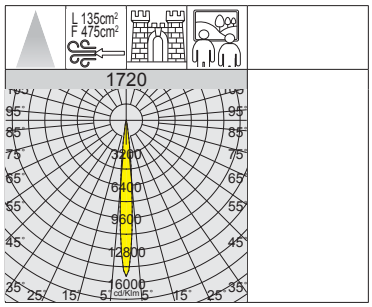



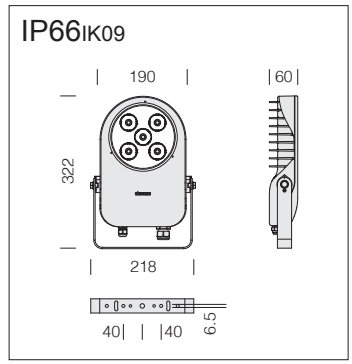

For DMX management of the luminaire, see the section about DMX controllers and accessories (*chapter Lighting management systems - DMX solution for LED RGBW).*

Upon request: version with 25° or 35° beam opening.

1720 Cripto small - LED RGBW DMX/RDM					
		CLD DMX			LUMEN OUTPUT (tq= 25 °C)
LED	colour	weight	code	W tot	K - ølm - degrees
LED RGBW	graphite	2.20	413058-00	**max. 50**	R= 376lm - G= **980lm** - B= 155lm W= 752lm (3000K) - 10°

Upon request: DMX start address 1 (1=RED 2=GREEN 3=BLUE 4=WHITE)
- Without DMX signal (loss of signal or upon start-up): functions at 100% WHITE with no light shows
- With DMX signal: stage light effects sent from the central control unit

Upon request:
1) Custom DMX addressing
2) STAND ALONE colour selection (Red, Green, Blue, White or any other colour such as Orange, Pink, Light Blue, Purple, etc.)
3) DMX PERSONALITY setting: in case of loss of DMX signal, the fixture will set itself to a random colour, which can be either the same or different from the STAND ALONE colour (to be specified upon ordering)

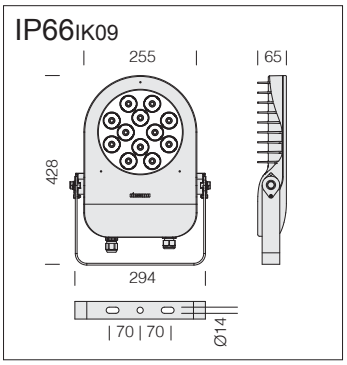

For DMX management of the luminaire, see the section about DMX controllers and accessories (*chapter Lighting management systems - DMX solution for LED RGBW).*



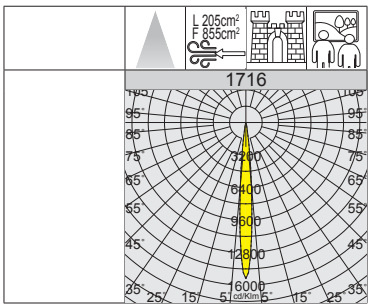

Upon request: version with 25° or 35° beam opening.

1716 Cripto medium - LED RGBW DMX/RDM

		CLD DMX			LUMEN OUTPUT (tq= 25 °C)
LED	colour	weight	code	W tot	K - ølm - degrees
LED RGBW	graphite	4.90	413068-00	**max. 50**	R= 392lm - G= 1162lm - B= 175lm W= 845lm (3000K) - 10°

Upon request: DMX start address 1 (1=RED 2=GREEN 3=BLUE 4=WHITE)
- Without DMX signal (loss of signal or upon start-up): functions at 100% WHITE with no light shows
- With DMX signal: stage light effects sent from the central control unit

Upon request:
1) Custom DMX addressing
2) STAND ALONE colour selection (Red, Green, Blue, White or any other colour such as Orange, Pink, Light Blue, Purple, etc.)
3) DMX PERSONALITY setting: in case of loss of DMX signal, the fixture will set itself to a random colour, which can be either the same or different from the STAND ALONE colour (to be specified upon ordering)

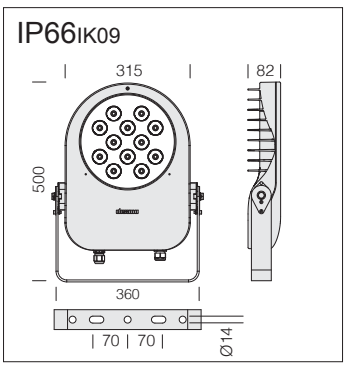

For DMX management of the luminaire, see the section about DMX controllers and accessories (*chapter Lighting management systems - DMX solution for LED RGBW).*



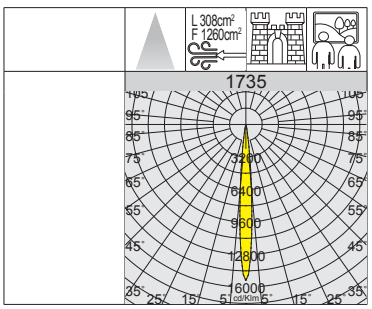

Upon request: version with 25° or 35° beam opening.

1735 Cripto big - LED RGBW DMX/RDM

		CLD DMX			LUMEN OUTPUT (tq= 25 °C)
LED	colour	weight	code	W tot	K - ølm - degrees
LED RGBW	graphite	7.70	413198-00	**max. 100**	R= 798lm - G= **2085lm** - B= 334lm W= 1625lm (3000K) - 10°

Upon request: DMX start address 1 (1=RED 2=GREEN 3=BLUE 4=WHITE)
- Without DMX signal (loss of signal or upon start-up): functions at 100% WHITE with no light shows
- With DMX signal: stage light effects sent from the central control unit

Upon request:
1) Custom DMX addressing
2) STAND ALONE colour selection (Red, Green, Blue, White or any other colour such as Orange, Pink, Light Blue, Purple, etc.)
3) DMX PERSONALITY setting: in case of loss of DMX signal, the fixture will set itself to a random colour, which can be either the same or different from the STAND ALONE colour (to be specified upon ordering)



GENERAL CHARACTERISTICS

Housing: in die-cast aluminium with cooling fins.

Optics: in PMMA, highly resistant to temperature and UV radiation.

Diffuser: 6mm thick tempered glass, resistant to thermal shocks and impacts (UNI-EN 12150-1 : 2001).

Coating: the fully automated powder-coating cycle involves a polyester-based, salt-spray corrosion-resistant and UV-stabilised paint.

Equipment: complete with galvanised and coated bracket. Silicone rubber gasket; external screws and bolts in stainless steel; air recirculation valve. Waterproof connector for quick installation with **no need to open the fixture.**

SURGE

Electronic safety device to protect the LED module and the related ballast compliant with EN 61547.
It works in two modes:
- differential mode: surge between power cables and between the phase and neutral.
- common mode: surge between power, L/N and ground cables or between the fixture's body if it is of class II and installed on a metal pole.

OTHER CHARACTERISTICS



The heat dissipation system was designed and manufactured to allow LED operation at adequate temperatures and guarantee excellent performance/efficiency and long life.



Precision optics that allow broad design flexibility guaranteeing high levels of light quality.

OTHER INFORMATION

The fixture's design is configured to minimise wind exposure surfaces:
Litio 2.0 small = L:153cm² F:544cm²
Litio 2.0 medium = L:236cm² F:1140cm²
Litio 2.0 big = L:236cm² F:1370cm²



POWER SWITCH

POWER SWITCH standard version: in a single body frame, you have a fully equipped luminaire designed to meet any need; with integrated switch you can select the fixture's total wattage, maintaining aesthetic continuity and differentiating the amount of light emitted.

CCT POWER

LITIO 2.0 MEDIUM - CCT / POWER SWITCH: in a single body frame, you have a fully equipped luminaire designed to meet any need, including the possibility to select the desired colour temperature (3000K-4000K-5000K) in 3 power wattages, maintaining aesthetic continuity and differentiating the amount of light emitted.

UPON REQUEST

It is possible to order **Litio 2.0** with lens having photometric distributions that allow considerable design flexibility. Available with different SYMMETRIC, ASYMMETRIC and STREET beam angles, these fixtures are ideal for any lighting applications.

IP66 IK10

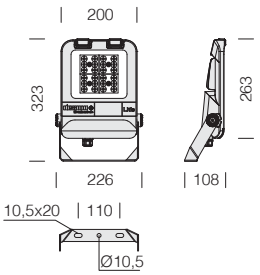

LED: power factor: ≥0,9.
Luminous flux maintenance 80%: 80.000h (L80B20).



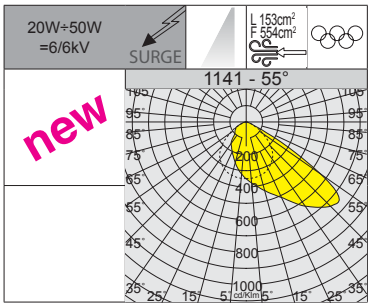

RG0 Ethr
+40 C° -40
U.V.
LOW FLICKER
POWER SWITCH
3000K
4000K
5000K

1141 Litio 2.0 small - POWER SWITCH - asymmetric

		CLD			LUMEN OUTPUT (tq= 25 °C)
LED	colour	weight	code	W tot	K - ølm - CRI - degrees
LED	RAL 7021	2.40	412000-00	20	4000K - **2964lm** - CRI 80 - 55°
				30	4000K - **4446lm** - CRI 80 - 55°
				50	4000K - **7410lm** - CRI 80 - 55°
LED	RAL 7021	2.40	412000-39	20	3000K - **2816lm** - CRI 80 - 55°
				30	3000K - **4224lm** - CRI 80 - 55°
				50	3000K - **7040lm** - CRI 80 - 55°
LED	RAL 7021	2.40	412000-0035	20	5000K - **2964lm** - CRI 80 - 55°
				30	5000K - **4446lm** - CRI 80 - 55°
				50	5000K - **7410lm** - CRI 80 - 55°

IP66 IK10

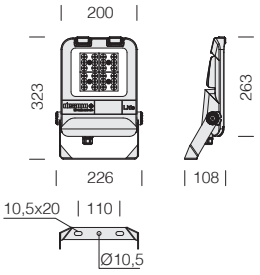

LED: power factor: ≥0,9.
Luminous flux maintenance 80%: 80.000h (L80B20).



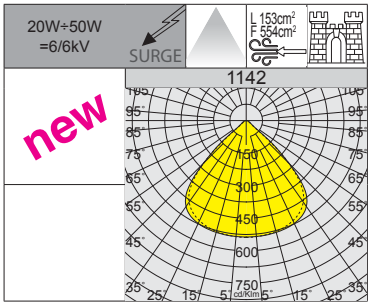

RG0 Ethr
+40 C° -40
U.V.
LOW FLICKER
POWER SWITCH
3000K
4000K
5000K

1142 Litio 2.0 small - POWER SWITCH - wide beam

		CLD			LUMEN OUTPUT (tq= 25 °C)
LED	colour	weight	code	W tot	K - ølm - CRI
LED	RAL 7021	2.40	412005-00	20	4000K - **3000lm** - CRI 80
				30	4000K - **4500lm** - CRI 80
				50	4000K - **7500lm** - CRI 80
LED	RAL 7021	2.40	412005-39	20	3000K - **2850lm** - CRI 80
				30	3000K - **4275lm** - CRI 80
				50	3000K - **7125lm** - CRI 80
LED	RAL 7021	2.40	412005-0035	20	5000K - **3000lm** - CRI 80
				30	5000K - **4500lm** - CRI 80
				50	5000K - **7500lm** - CRI 80

Upon request available **Litio 2.0 small** with other photometric distributions:

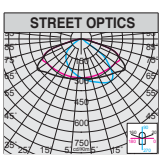

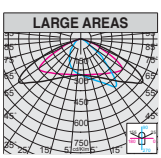

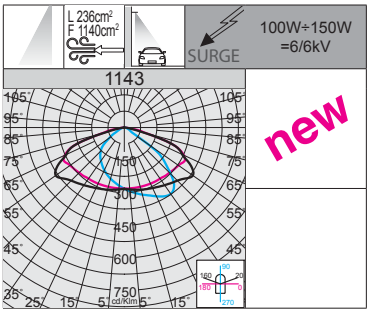



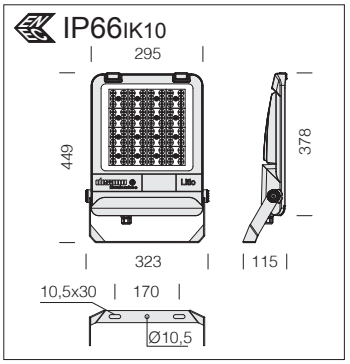

LED: power factor: ≥0,9.
Luminous flux maintenance 80%: 80.000h (L80B20).

1143 Litio 2.0 medium - POWER SWITCH - street optics

		CLD			LUMEN OUTPUT (tq= 25 °C)
LED	colour	weight	code	W tot	K - ølm - CRI
LED	RAL 7021	4.70	412010-00	**100**	4000K - **15000lm** - CRI 80
				120	4000K - **18000lm** - CRI 80
				150	4000K - **22500lm** - CRI 80
LED	RAL 7021	4.70	412010-39	**100**	3000K - **14250lm** - CRI 80
				120	3000K - **17100lm** - CRI 80
				150	3000K - **21375lm** - CRI 80
LED	RAL 7021	4.70	412010-0035	**100**	5000K - **15000lm** - CRI 80
				120	5000K - **18000lm** - CRI 80
				150	5000K - **22500lm** - CRI 80

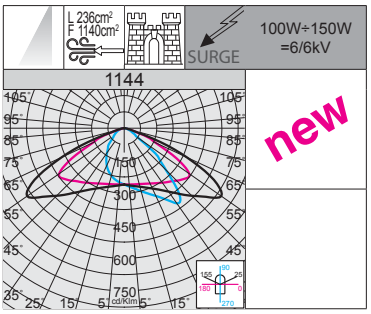



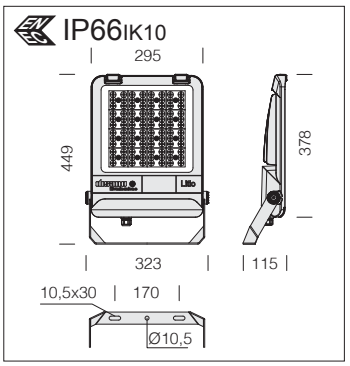

LED: power factor: ≥0,9.
Luminous flux maintenance 80%: 80.000h (L80B20).

1144 Litio 2.0 medium - POWER SWITCH - large areas

		CLD			LUMEN OUTPUT (tq= 25 °C)
LED	colour	weight	code	W tot	K - ølm - CRI
LED	RAL 7021	4.70	412015-00	**100**	4000K - **15180lm** - CRI 80
				120	4000K - **18216lm** - CRI 80
				150	4000K - **22770lm** - CRI 80
LED	RAL 7021	4.70	412015-39	**100**	3000K - **14421lm** - CRI 80
				120	3000K - **17305lm** - CRI 80
				150	3000K - **21632lm** - CRI 80
LED	RAL 7021	4.70	412015-0035	**100**	5000K - **15180lm** - CRI 80
				120	5000K - **18216lm** - CRI 80
				150	5000K - **22770lm** - CRI 80

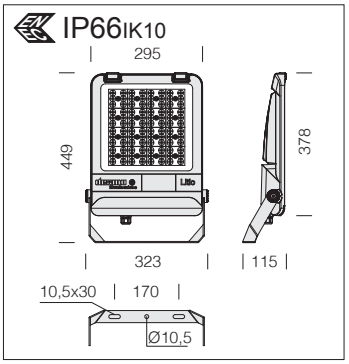

LED: power factor: ≥0,9.
Luminous flux maintenance 80%: 80.000h (L80B20).



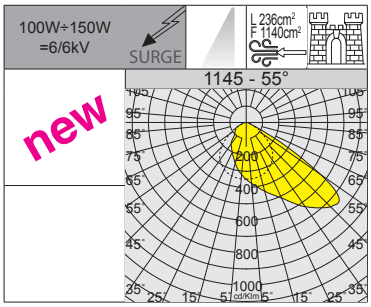

RG0 Ethr
+40 C° -40
U.V.
LOW FLICKER
POWER SWITCH
3000K
4000K
5000K

1145 Litio 2.0 medium - POWER SWITCH - asymmetric

		CLD			LUMEN OUTPUT (tq= 25 °C)
LED	colour	weight	code	W tot	K - ølm - CRI - degrees
LED	RAL 7021	4.70	412020-00	**100**	4000K - **14820lm** - CRI 80 - 55°
				120	4000K - **17784lm** - CRI 80 - 55°
				150	4000K - **22230lm** - CRI 80 - 55°
LED	RAL 7021	4.70	412020-39	**100**	3000K - **14642lm** - CRI 80 - 55°
				120	3000K - **16895lm** - CRI 80 - 55°
				150	3000K - **21119lm** - CRI 80 - 55°
LED	RAL 7021	4.70	412020-0035	**100**	5000K - **14820lm** - CRI 80 - 55°
				120	5000K - **17784lm** - CRI 80 - 55°
				150	5000K - **22230lm** - CRI 80 - 55°

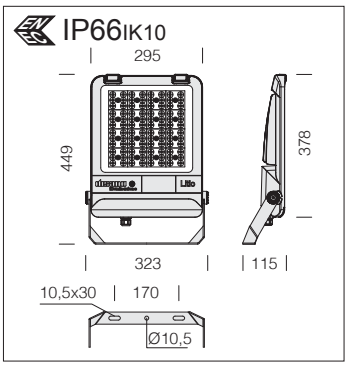

LED: power factor: ≥0,9.
Luminous flux maintenance 80%: 80.000h (L80B20).



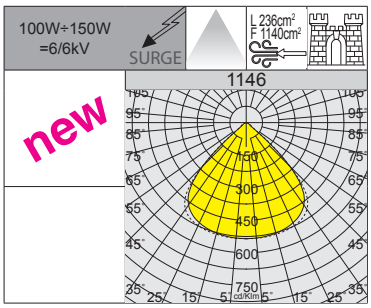

RG0 Ethr
+40 C° -40
U.V.
LOW FLICKER
POWER SWITCH
5000K
4000K
5000K

1146 Litio 2.0 medium - POWER SWITCH - wide beam

		CLD			LUMEN OUTPUT (tq= 25 °C)
LED	colour	weight	code	W tot	K - ølm - CRI
LED	RAL 7021	4.70	412025-00	**100**	4000K - **15332lm** - CRI 80
				120	4000K - **18398lm** - CRI 80
				150	4000K - **23043lm** - CRI 80
LED	RAL 7021	4.70	412025-39	**100**	3000K - **14565lm** - CRI 80
				120	3000K - **17478lm** - CRI 80
				150	3000K - **21891lm** - CRI 80
LED	RAL 7021	4.70	412025-0035	**100**	5000K - **15332lm** - CRI 80
				120	5000K - **18398lm** - CRI 80
				150	5000K - **23043lm** - CRI 80



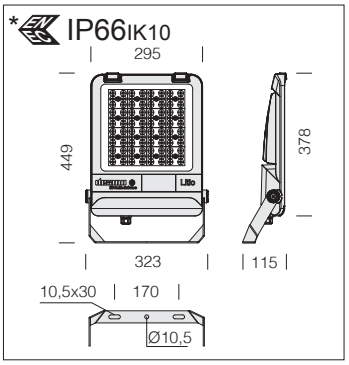

LED: power factor: ≥0,9.
Luminous flux maintenance 80%: 80.000h (L80B20).



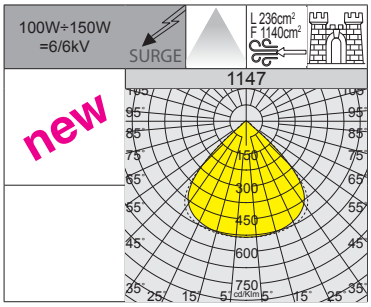

RG0 Ethr
+40 C° -40
U.V.
LOW FLICKER
CCT POWER

1147 Litio 2.0 medium - CCT/POWER SWITCH - wide beam

		CLD			LUMEN OUTPUT (tq= 25 °C)
LED	colour	weight	code	W tot	K - ølm - CRI
LED	RAL 7021	4.70	412030-00	**100**	3000K - **14565lm** - CRI 80
					4000K - **15332lm** - CRI 80
					5000K - **15332lm** - CRI 80
				120	3000K - **17478lm** - CRI 80
					4000K - **18398lm** - CRI 80
					5000K - **18398lm** - CRI 80
				150	3000K - **21891lm** - CRI 80
					4000K - **23043lm** - CRI 80
					5000K - **23043lm** - CRI 80

Upon request available **Litio 2.0 medium** with other photometric distributions:

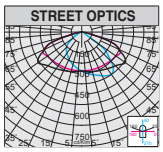

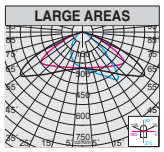

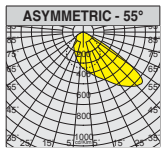



LITIO 2.0 - CCT / POWER SWITCH : in a single body frame, you have a fully equipped luminaire designed to meet any need, including the possibility to select the desired colour temperature (3000K-4000K-5000K) in 3 power wattages, maintaining aesthetic continuity and differentiating the amount of light emitted.

CCT SWITCH = with this integrated switch you can select the desired light colour, 3000K - 4000K - 5000K.

The main feature of this luminaire is the "colour-changing" technology: with the built-in selector switch positioned on the fixture's body, you can choose the desired colour temperature (3000K-4000K-5000K), adjusting its emission to most lighting installations.

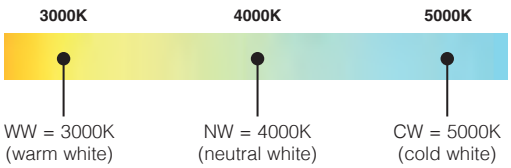

POWER SWITCH = with this integrated switch you can select the fixture's total wattage, 100W/120W/150W.



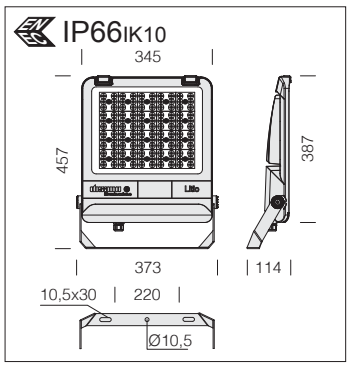

LED: power factor: ≥0,9.
Luminous flux maintenance 80%: 80.000h (L80B20).



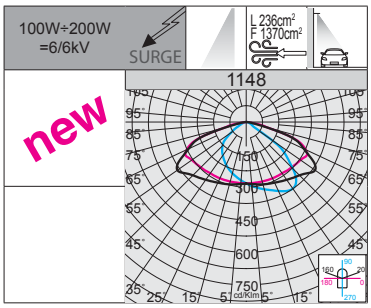

RG0 Ethr · +40 C° -40 · U.V. · LOW FLICKER · POWER SWITCH · 3000K · 4000K · 5000K

1148 Litio 2.0 big - POWER SWITCH - street optics

		CLD			LUMEN OUTPUT (tq= 25 °C)
LED	colour	weight	code	W tot	K - ølm - CRI
LED	RAL 7021	5.40	412040-00	**100**	4000K - **16500lm** - CRI 80
				150	4000K - **24750lm** - CRI 80
				200	4000K - **33000lm** - CRI 80
LED	RAL 7021	5.40	412040-39	**100**	3000K - **15675lm** - CRI 80
				150	3000K - **23512lm** - CRI 80
				200	3000K - **31390lm** - CRI 80
LED	RAL 7021	5.40	412040-0035	**100**	5000K - **16500lm** - CRI 80
				150	5000K - **24750lm** - CRI 80
				200	5000K - **33000lm** - CRI 80

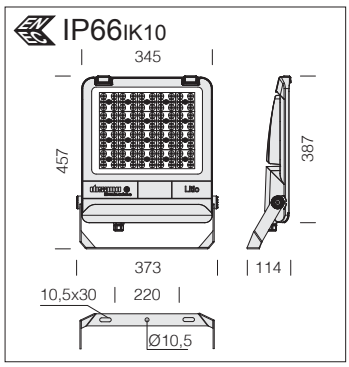

LED: power factor: ≥0,9.
Luminous flux maintenance 80%: 80.000h (L80B20).



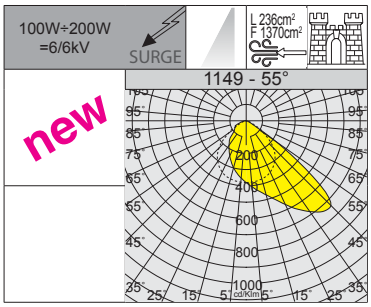

RG0 Ethr · +40 C° -40 · U.V. · LOW FLICKER · POWER SWITCH · 3000K · 4000K · 5000K

1149 Litio 2.0 big - POWER SWITCH - asymmetric

		CLD			LUMEN OUTPUT (tq= 25 °C)
LED	colour	weight	code	W tot	K - ølm - CRI - degrees
LED	RAL 7021	5.40	412045-00	**100**	4000K - **16302lm** - CRI 80 - 55°
				150	4000K - **24749lm** - CRI 80 - 55°
				200	4000K - **32604lm** - CRI 80 - 55°
LED	RAL 7021	5.40	412045-39	**100**	3000K - **15487lm** - CRI 80 - 55°
				150	3000K - **23512lm** - CRI 80 - 55°
				200	3000K - **30974lm** - CRI 80 - 55°
LED	RAL 7021	5.40	412045-0035	**100**	5000K - **16302lm** - CRI 80 - 55°
				150	5000K - **24749lm** - CRI 80 - 55°
				200	5000K - **32604lm** - CRI 80 - 55°

Upon request available **Litio 2.0 big** with other photometric distributions:

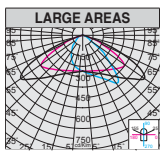

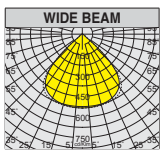



GENERAL CHARACTERISTICS

Housing: in die-cast aluminium with cooling fins.

Diffuser: 4mm thick tempered glass, resistant to thermal shocks and impacts.

Coating: the fully automated powder-coating cycle involves a polyester-based, salt-spray corrosion-resistant and UV-stabilised paint.

Equipment: complete with galvanised and coated bracket; silicone rubber gasket; external screws and bolts in stainless steel; complete with electrical cable for mains connection **Mini Rodio**, with knife switch supplied to interrupt the line during maintenance.

SURGE Electronic safety device to protect the LED module and the related ballast compliant with EN 61547.
It works in two modes:
- differential mode: surge between power cables and between the phase and neutral.
- common mode: surge between power, L/N and ground cables or between the fixture's body if it is of class II and installed on a metal pole.

On request: protection up to 10KV.

OTHER CHARACTERISTICS



The heat dissipation system was designed and manufactured to allow LED operation at adequate temperatures and guarantee excellent performance/efficiency and long life.



Precision optics that allow broad design flexibility guaranteeing high levels of light quality.

OTHER INFORMATION

LOW FLICKER Product with a very low flicker; uniform light for greater eye protection.

The fixture's design is configured to minimise wind exposure surfaces:
Micro Rodio = L:86cm² F:278cm²
Mini Rodio = L:242cm² F:807cm²
Rodio = L:300/390cm² F:1124/1420cm²
Rodio HP = L:455cm² F:1529cm²

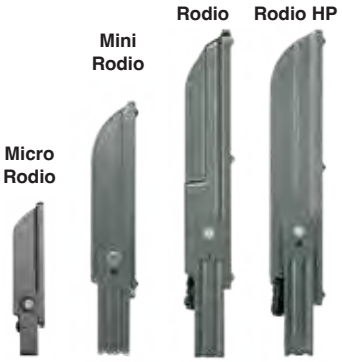



UPON REQUEST

Possibility of centralized lighting point control or via **external** presence/lighting sensors (see chapter *Lighting management systems and recommendations*).

Protective coating recommended for marine environments within 5 km of the sea.

DIMM DIG Version **CLD D-D (DALI)** wiring with **sub-code -0041:** thanks to pre-programmed settings or a software programme, this type of wiring allows accurate light emission dimming.

AMBER LED Version with **AMBER LED 2200K** with sub-code **-73**
Note: when ordering, make sure you select the **AMBER LED** type best suited for your lighting design and installation needs.



ACCESSORIES

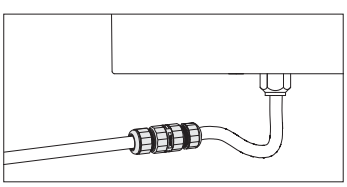

acc. 339 Connector (3-pole)
993854-00
To be used for mains connection of Micro Rodio

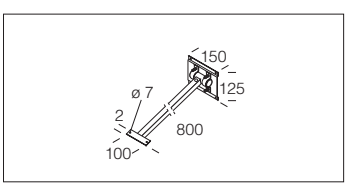

acc. 41 adjustable-angle arm	
graphite	995506-00
white	995508-00
RAL 7021	995509-00
Adjustable-angle arm galvanized steel. For Micro Rodio.	

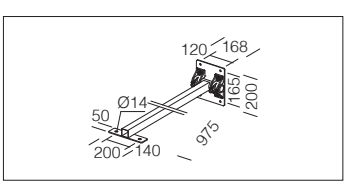

acc. 42 adjustable-angle arm	
graphite	995504-00
Adjustable-angle arm galvanized steel. For Mini Rodio.	

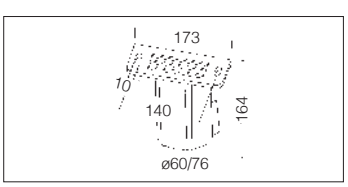

acc. 333 Ø60 pole mounting	
graphite	997915-00
acc. 334 Ø76 pole mounting	
graphite	997916-00
Made of aluminium. To be used to apply Mini Rodio on a ø 60/76 pole.	



Built-in RADAR SENSOR (sub-code -19 at an extra price): is an automatic sensor that immediately sense the presence of people's movements and anyone walking past. When there is movement within the sensor's detection range, the light will remain ON. When no further movement is detected, the light will switch OFF after a pre-set time.

FACTORY SETTINGS	
Power supply	220-240V AC 50/60 Hz
Detection area	ceiling: 360°
Motion detection speed	0,5-1-1,5 m/s
Mounting height	ceiling: 2,5m÷3m
Energy consumption	<0,5 W (stand by)
Hold time	1 min
Ambient light	Disable

Remote control cod. **81418618** (to be purchased separately) that **allows changing the parameters even after installation is complete** and without the need to directly access the fixture.

RG0 Ethr

+40 C° -20

U.V.

LOW FLICKER

3000K

4000K

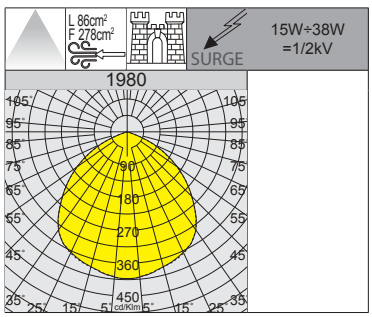



IP66IK08

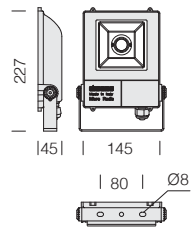

LED: power factor ≥0,92. Luminous flux maintenance:	
90%	50.000h (L90B10)
70%	100.000h (L70B50)

Reflector: in anodized 99.85 aluminium.

Equipment: complete with electrical cable for mains connection L=0,6m.

On request version with:
- **LED AMBER 2200K** with subcode **-73.**
- double insulation class with subcode **-14.**
- **CLD D-D (DALI)** wiring with **subcode -0041.**

***** 230V version with **built-in radar sensor**.

1980 Micro Rodio - COB

		CLD			LUMEN OUTPUT (tq= 25 °C)
LED	colour	weight	code	W tot	K - ølm - CRI
COB	graphite	1.10	414860-00	**29**	4000K - 2905lm - CRI 80
	white		414861-00		
	RAL 7021		414862-00		
COB	graphite	1.10	414860-39	**29**	3000K - 2702lm - CRI 80
	white		414861-39		
	RAL 7021		414862-39		
COB	graphite	1.10	414865-00	**38**	4000K - 3537lm - CRI 80
	white		414866-00		
	RAL 7021		414867-00		
COB	graphite	1.10	414865-39	**38**	3000K - 3289lm - CRI 80
	white		414866-39		
	RAL 7021		414867-39		
230V					K - ølm 230V - CRI
COB *	graphite	1.10	414863-19	**15**	4000K - 1484lm - CRI 80
	white		414864-19		
	RAL 7021		414867-19		

IP66IK08

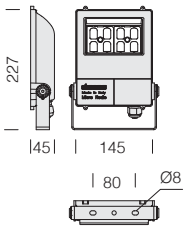



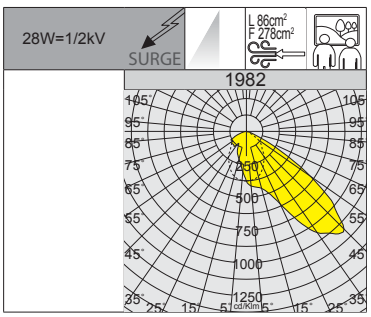

Optics: in high efficiency PMMA.

LED: power factor: ≥0,9.
Luminous flux maintenance 90%: 100.000h (L90B10).

Equipment: complete with electrical cable for mains connection L=0,6m.

On request version with:
• double insulation class with subcode **-14.**
• **CLD D-D (DALI)** wiring with **subcode -0041.**

1982 Micro Rodio - asymmetric

		CLD			LUMEN OUTPUT (tq= 25 °C)
LED	colour	weight	code	W tot	K - ølm - CRI
LED	graphite	1.10	414870-00	**28**	4000K - 3118lm - CRI 80
	white		414871-00		
	RAL 7021		414872-00		
LED	graphite	1.10	414870-39	**28**	3000K - 2900lm - CRI 80
	white		414871-39		
	RAL 7021		414872-39		

IP66IK08

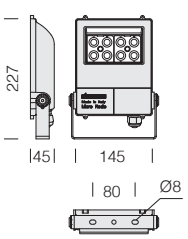



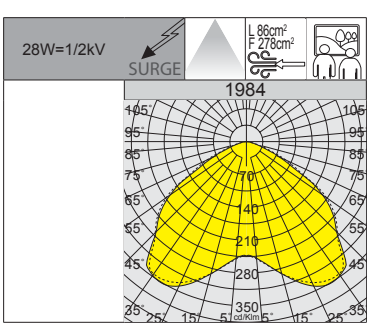

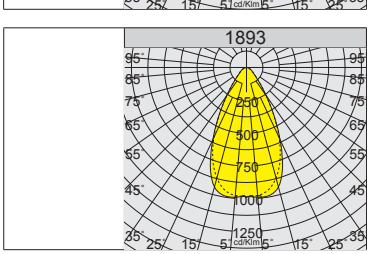

Optics: in high efficiency PMMA.

LED: power factor: ≥0,9.
Luminous flux maintenance 90%: 100.000h (L90B10).

Equipment: complete with electrical cable for mains connection L=0,6m.

On request version with:
• double insulation class with subcode **-14.**
• **CLD D-D (DALI)** wiring with **subcode -0041.**

1984 Micro Rodio - symmetric wide beam

		CLD			LUMEN OUTPUT (tq= 25 °C)
LED	colour	weight	code	W tot	K - ølm - CRI
LED	graphite	1.10	414890-00	**28**	4000K - 3056lm - CRI 80
	white		414891-00		
	RAL 7021		414892-00		
LED	graphite	1.10	414890-39	**28**	3000K - 2842lm - CRI 80
	white		414891-39		
	RAL 7021		414892-39		

1983 Micro Rodio - symmetric narrow beam

		CLD			LUMEN OUTPUT (tq= 25 °C)
LED	colour	weight	code	W tot	K - ølm - CRI
LED	graphite	1.10	414880-00	**28**	4000K - 3097lm - CRI 80
	white		414881-00		
	RAL 7021		414882-00		
LED	graphite	1.10	414880-39	**28**	4000K - 2880lm - CRI 80
	white		414881-39		
	RAL 7021		414882-39		



RG0 Ethr

+40 C° -20

U.V.

LOW FLICKER

3000K

4000K

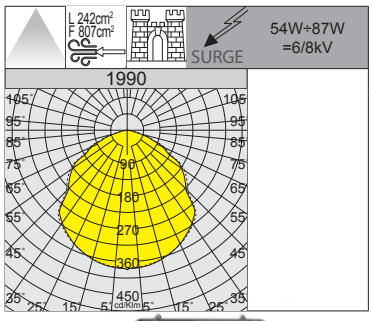



100.000h



IP66 IK08

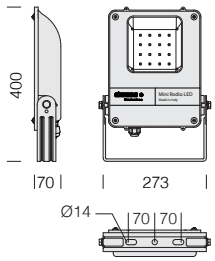

LED: power factor: ≥0,9.
Luminous flux maintenance 90%: 100.000h (L90B10).

Equipment: complete with electrical cable for mains connection L=0,6m.

1990 Mini Rodio - symmetric wide beam					
		CLD			LUMEN OUTPUT (tq= 25 °C)
LED	colour	weight	code	W tot	K - ølm - CRI
LED	graphite	3.60	414900-00	**54**	4000K - 7679lm - CRI 80
			414900-39		3000K - 7141lm - CRI 80
LED	graphite	3.60	414901-00	**73**	4000K - 9440lm - CRI 80
			414901-39		3000K - 8779lm - CRI 80

IP66 IK08

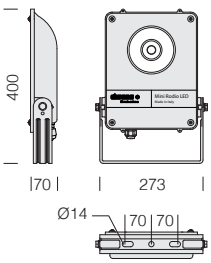

LED: power factor ≥0,92. Luminous flux maintenance:	
90%	50.000h (L90B10)
70%	100.000h (L70B50)

Reflector: in pressed 99.85 aluminium, anodically oxidized and polished.

Equipment: complete with electrical cable for mains connection L=0,6m.

Upon request: narrow beam version (sub-code **-22**).

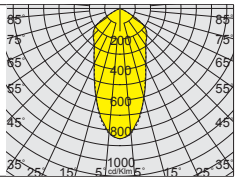

100.000h



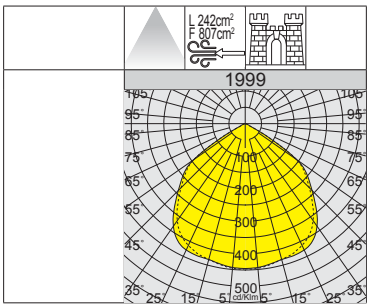



RGO Ethr

+40 C° -20

U.V.

3000K

4000K

5700K

FLOODLIGHTS

1999 Mini Rodio - COB symmetric

		CLD			LUMEN OUTPUT (tq= 25 °C)
LED	colour	weight	code	W tot	K - ølm - CRI
COB	graphite	3.00	414840-00	**39**	4000K - 6502lm - CRI 80
			414840-39		3000K - 6177lm - CRI 80
			414840-0035		5700K - 6502lm - CRI 80
COB	graphite	3.00	414841-00	**54**	4000K - 8180lm - CRI 80
			414841-39		3000K - 7771lm - CRI 80
			414841-0035		5700K - 8180lm - CRI 80
COB	graphite	3.00	414842-00	**66**	4000K - 9631lm - CRI 80
			414842-39		3000K - 8660lm - CRI 80
			414842-0035		5700K - 9631lm - CRI 80
COB	graphite	3.00	414843-00	**73**	4000K - 11751lm - CRI 80
			414843-39		3000K - 10929lm - CRI 80
			414843-0035		5700K - 11751lm - CRI 80

IP66 IK08

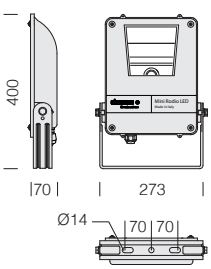

LED: power factor ≥0,92. Luminous flux maintenance:	
90%	50.000h (L90B10)
70%	100.000h (L70B50)

Reflector: in high-grade 99,99 aluminium with PVD treatment.

Equipment: complete with electrical cable for mains connection L=0,6m.

100.000h



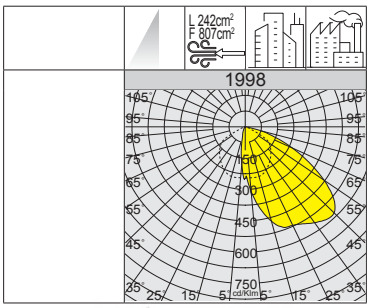



RGO Ethr

+40 C° -20

U.V.

3000K

4000K

5700K

1998 Mini Rodio - COB asymmetric

		CLD			LUMEN OUTPUT (tq= 25 °C)
LED	colour	weight	code	W tot	K - ølm - CRI
COB	graphite	3.00	414850-00	**39**	4000K - 6060lm - CRI 80
			414850-39		3000K - 5755lm - CRI 80
			414850-0035		5700K - 6060lm - CRI 80
COB	graphite	3.00	414851-00	**54**	4000K - 7601lm - CRI 80
			414851-39		3000K - 7222lm - CRI 80
			414851-0035		5700K - 7601lm - CRI 80
COB	graphite	3.00	414852-00	**66**	4000K - 8720lm - CRI 80
			414852-39		3000K - 8197lm - CRI 80
			414852-0035		5700K - 8720lm - CRI 80
COB	graphite	3.00	414853-00	**73**	4000K - 10490lm - CRI 80
			414853-39		3000K - 9765lm - CRI 80
			414853-0035		5700K - 10490lm - CRI 80















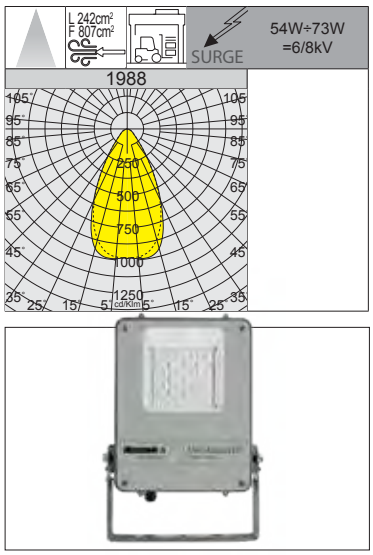





Optics: in high efficiency PMMA.

LED: power factor: ≥0,9.
Luminous flux maintenance 90%: 100.000h (L90B10).

Equipment: complete with electrical cable for mains connection L=0,6m.

1988 Mini Rodio - symmetric narrow beam

		CLD			LUMEN OUTPUT (tq= 25 °C)
LED	colour	weight	code	W tot	K - ølm - CRI
LED	graphite	3.60	414930-00	**54**	4000K - 9242lm - CRI 80
			414930-39		3000K - 8595lm - CRI 80
LED	graphite	3.60	414931-00	**73**	4000K - 11363lm - CRI 80
			414931-39		3000K - 10568lm - CRI 80

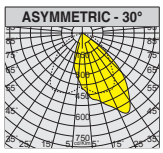

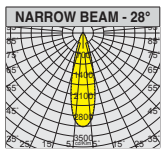

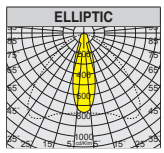

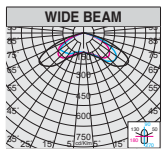

Upon request available **Mini Rodio** with other photometric distributions:















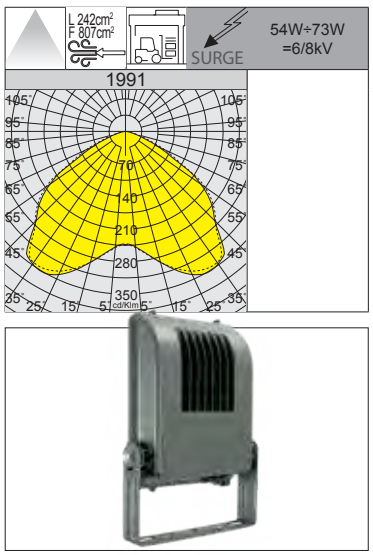



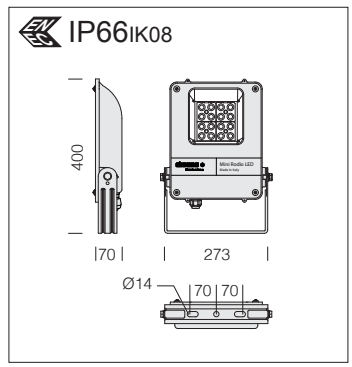

Optics: in high efficiency PMMA.

LED: power factor: ≥0,9.
Luminous flux maintenance 90%: 100.000h (L90B10).

Equipment: complete with electrical cable for mains connection L=0,6m.

1991 Mini Rodio - symmetric wide beam

		CLD			LUMEN OUTPUT (tq= 25 °C)
LED	colour	weight	code	W tot	K - ølm - CRI
LED	graphite	3.60	414940-00	**54**	4000K - 9121lm - CRI 80
			414940-39		3000K - 8483lm - CRI 80
LED	graphite	3.60	414941-00	**73**	4000K - 11213lm - CRI 80
			414941-39		3000K - 10428lm - CRI 80

IP66IK08

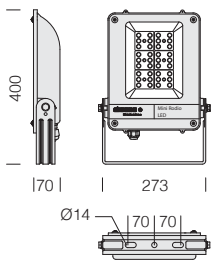

Optics: in high efficiency PMMA.

LED: power factor: ≥0,9. Luminous flux maintenance 80%: 60.000h (L80B20).

Equipment: complete with electrical cable for mains connection L=0,6m.



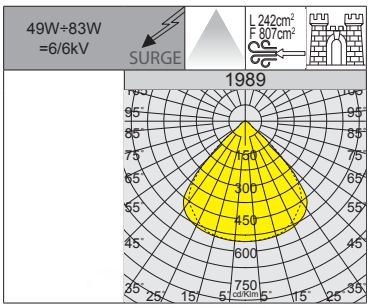





MINI RODIO POWER SWITCH: in a single body frame, you have a fully equipped luminaire designed to meet any need; with integrated switch you can select the fixture's total wattage (49W-64W-83W), maintaining aesthetic continuity and differentiating the amount of light emitted.

1989 Mini Rodio - POWER SWITCH - symmetric

		CLD			LUMEN OUTPUT (tq= 25 °C)
LED	colour	weight	code	W tot	K - ølm - CRI
LED	graphite	3.60	414915-00	**49**	4000K - 8323lm - CRI 70
				64	4000K - 10617lm - CRI 70
				83	4000K - 13493lm - CRI 70

IP66IK08

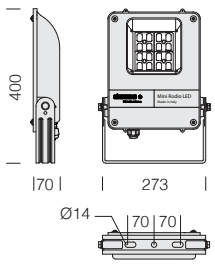

Optics: in high efficiency PMMA.

LED: power factor: ≥0,9. Luminous flux maintenance 90%: 100.000h (L90B10).

Equipment: complete with electrical cable for mains connection L=0,6m.



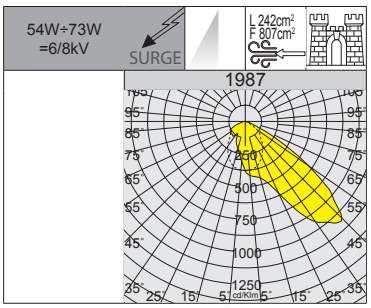



1987 Mini Rodio - asymmetric

		CLD			LUMEN OUTPUT (tq= 25 °C)
LED	colour	weight	code	W tot	K - ølm - CRI
LED	graphite	3.60	414910-00	**54**	4000K - 9302lm - CRI 80
			414910-39		3000K - 8650lm - CRI 80
LED	graphite	3.60	414911-00	**73**	4000K - 11436lm - CRI 80
			414911-39		3000K - 10635lm - CRI 80



GENERAL CHARACTERISTICS

Housing: in die-cast aluminium with cooling fins.

Diffuser: 5mm thick tempered glass, resistant to thermal shocks and impacts (UNI-EN 12150-1 : 2001).

Coating: the fully automated powder-coating cycle involves a polyester-based, salt-spray corrosion-resistant and UV-stabilised paint.

Equipment: complete with galvanised and coated bracket. Silicone rubber gasket; external screws and bolts in stainless steel; air recirculation valve. Waterproof connector for quick installation with **no need to open the fixture.**

SURGE Electronic safety device to protect the LED module and the related ballast compliant with EN 61547.
It works in two modes:
- differential mode: surge between power cables and between the phase and neutral.
- common mode: surge between power, L/N and ground cables or between the fixture's body if it is of class II and installed on a metal pole.

OTHER CHARACTERISTICS



The heat dissipation system was designed and manufactured to allow LED operation at adequate temperatures and guarantee excellent performance/efficiency and long life.



Precision optics that allow broad design flexibility guaranteeing high levels of light quality.

OTHER INFORMATION

Rodio HP: products compliant with ball impact resistance test standard DIN 18032-3: 2018.

Virtual midnight sub-code -30: to increase energy savings at night when there are fewer people and vehicles around, a lighting fixture can be programmed according to a specific profile (customizable on request). The fixture reduces its luminous flux through a self-learning process which, depending on the previous switching on and off times, will determine a hypothetical "virtual midnight". This is the average value between the time the fixture is switched on (sunset) and switched off (sunrise).

ATTENTION: *original settings and time slots for the "virtual midnight" value can be customized in up to 8 steps upon request.*

RGBW DMX RDM Rodio is also available in the RGBW - DMX/RDM version (see chapter *Lighting management systems - DMX solution for LED RGBW*).

UPON REQUEST

Possibility of centralized lighting point control or via **external** presence/lighting sensors (see chapter *Lighting management systems and recommendations*).

Protective coating recommended for marine environments within 5 km of the sea.

AMBER LED Version with **AMBER LED 2200K** with sub-code **-73:** lamps with warm amber light at a colour temperature of 2200K eliminate the risks of an excessive exposure to harmful blue LED light and allows a "softer" impact on inhabited zones, especially in historic centres.

Available special version with **AMBER colour LED** sources for wine processing and storage facilities. **Note:** when ordering, make sure you select the **AMBER LED** type best suited for your lighting design and installation needs.



Luminous flux maintenance Power factor ≥0.9		Wattage (tot.)	Allowed ambient temperature (min.°C ÷ max.°C)
90%	100.000h (L90B10) *(art. 1887-1887 HP-1888-1888 HP-1889-1890-1890 HP-1891-1891 HP-1892 -1893-1894)*	50W	Ta = -40°C ÷ +65°C
		75W	Ta = -40°C ÷ +65°C
		100W	Ta = -40°C ÷ +60°C
		110W	Ta = -40°C ÷ +50°C
		136W	Ta = -40°C ÷ +50°C
		150W	Ta = -40°C ÷ +45°C
		160W	Ta = -40°C ÷ +55°C
		180W	Ta = -40°C ÷ +45°C
		200W	Ta = -40°C ÷ +50°C
		250W	Ta = -40°C ÷ +45°C
		265W	Ta = -40°C ÷ +50°C

The table below shows the values for standard versions. For further information (expected life, temperatures) and/or for special versions, please contact our customer service.



ACCESSORIES

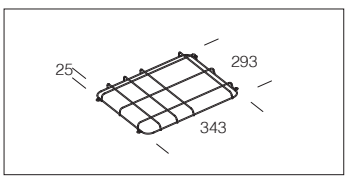

acc. 350 protection guard	
black	997902-00
Plastic-coated steel rod. For protection against impact of Rodio 12-24LED/COB.	

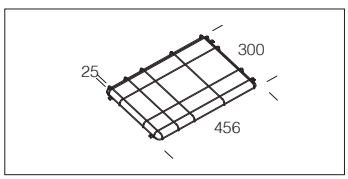

acc. 350 protection guard	
black	997925-00
Plastic-coated steel rod. For protection against impact of Rodio 36LED.	

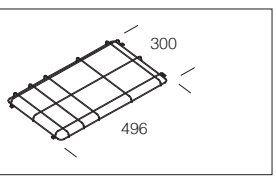

acc. 350 protection guard	
black	997928-00
Plastic-coated steel rod. For protection against impact of Rodio HP.	

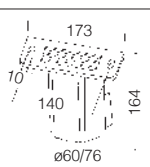

acc. 333 Ø60 pole mounting	
graphite	997915-00
acc. 334 Ø76 pole mounting	
graphite	997916-00
Made of aluminium. To be used to apply Rodio on a Ø60/76 pole.	

RG0 Ethr
+40 C° -20
U.V.
LOW FLICKER
3000K
4000K
5700K

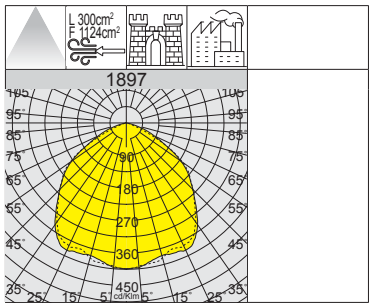



IP66 IK09

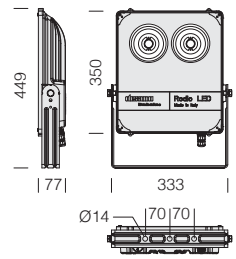

2200K - AMBER (sub-code -73)	
W tot	**LUMEN OUTPUT (tq= 25 °C)**
79	2200K - 9497lm
114	2200K - 11889lm
196	2200K - 22455lm

LED: power factor ≥0,92. Luminous flux maintenance:	
90%	50.000h (L90B10)
70%	100.000h (L70B50)

Reflector: in pressed 99.95 aluminium with PVD treatment, anodically oxidized and polished.

1897 Rodio - COB symmetric

		CLD			LUMEN OUTPUT (tq= 25 °C)
LED	colour	weight	code	W tot	K - ølm - CRI
COB	graphite	4.60	414820-00	**79**	4000K - 11984lm - CRI 80
			414820-39		3000K - 11385lm - CRI 80
			414820-0035		5700K - 11984lm - CRI 80
COB	graphite	4.60	414821-00	**103**	4000K - 15003lm - CRI 80
			414821-39		3000K - 14254lm - CRI 80
			414821-0035		5700K - 15003lm - CRI 80
COB	graphite	4.60	414822-00	**129**	4000K - 19262lm - CRI 80
			414822-39		3000K - 18107lm - CRI 80
			414822-0035		5700K - 19262lm - CRI 80
COB	graphite	5.00	414823-00	**196**	4000K - 28336lm - CRI 80
			414823-0035		5700K - 28336lm - CRI 80

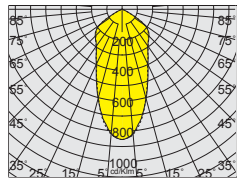

Upon request: narrow beam version (sub-code **-22**).

RG0 Ethr
+40 C° -20
U.V.
LOW FLICKER
3000K
4000K
5700K

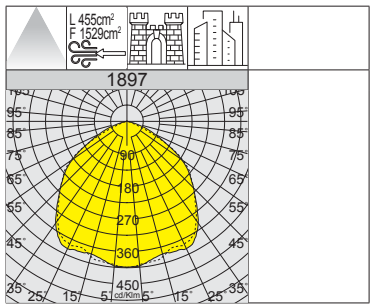



IP66 IK09

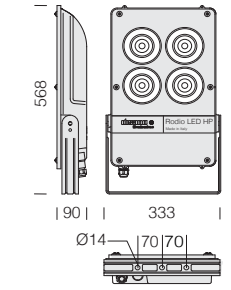

2200K - AMBER (sub-code -73)	
W tot	**LUMEN OUTPUT (tq= 25 °C)**
220	2200K - 27508lm
328	2200K - 39713lm

LED: power factor ≥0,92. Luminous flux maintenance:	
90%	50.000h (L90B10)
70%	100.000h (L70B50)

Reflector: in pressed 99.95 aluminium with PVD treatment, anodically oxidized and polished.

1897 Rodio HP - HIGH PERFORMANCE - COB symmetric

		CLD			LUMEN OUTPUT (tq= 25 °C)
LED	colour	weight	code	W tot	K - ølm - CRI
COB	graphite	7.20	414825-00	**246**	4000K - 38569lm - CRI 80
			414825-39		3000K - 35869lm - CRI 80
			414825-0035		5700K - 38569lm - CRI 80
COB	graphite	8.50	414826-00	**318**	4000K - 50114lm - CRI 80
			414826-39		3000K - 46605lm - CRI 80
			414826-0035		5700K - 50114lm - CRI 80

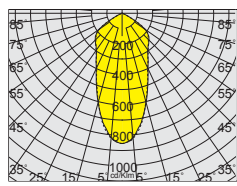

Upon request: narrow beam version (sub-code **-22**).

IP66 IK09

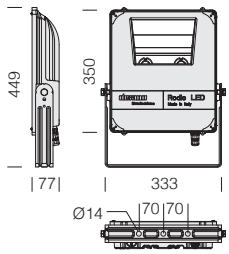

LED: power factor ≥0,92. Luminous flux maintenance:	
90%	50.000h (L90B10)
70%	100.000h (L70B50)

Reflector: in high-grade 99,95 aluminium with PVD treatment.

100.000h



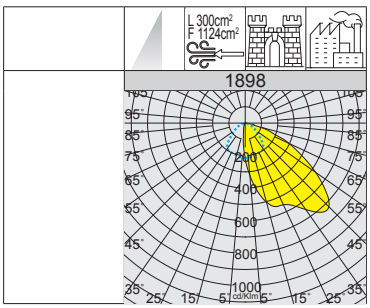

2200K - AMBER (sub-code -73)	
W tot	LUMEN OUTPUT (tq= 25 °C)
79	2200K - 8262lm
114	2200K - 10560lm
196	2200K - 20335lm

1898 Rodio - COB asymmetric

		CLD			LUMEN OUTPUT (tq= 25 °C)
LED	colour	weight	code	W tot	K - ølm - CRI
COB	graphite	4.60	414920-00	79	4000K - 10426lm - CRI 80
			414920-39		3000K - 9905lm - CRI 80
			414920-0035		5700K - 10426lm - CRI 80
COB	graphite	4.60	414921-00	103	4000K - 13326lm - CRI 80
			414921-39		3000K - 12661lm - CRI 80
			414921-0035		5700K - 13326lm - CRI 80
COB	graphite	4.60	414922-00	129	4000K - 17309lm - CRI 80
			414922-39		3000K - 16270lm - CRI 80
			414922-0035		5700K - 17309lm - CRI 80
COB	graphite	5.00	414923-00	196	4000K - 25660lm - CRI 80
			414923-0035		5700K - 25660lm - CRI 80

IP66 IK09

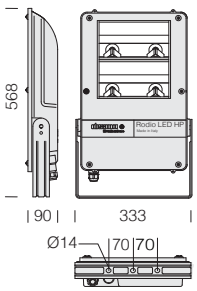

LED: power factor ≥0,92. Luminous flux maintenance:	
90%	50.000h (L90B10)
70%	100.000h (L70B50)

Reflector: in high-grade 99,95 aluminium with PVD treatment.

100.000h HP



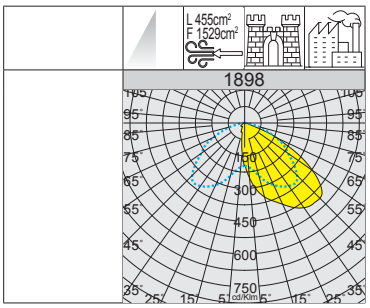

2200K - AMBER (sub-code -73)	
W tot	LUMEN OUTPUT (tq= 25 °C)
220	2200K - 26323lm
328	2200K - 39206lm

1898 Rodio HP - HIGH PERFORMANCE - COB asymmetric

		CLD			LUMEN OUTPUT (tq= 25 °C)
LED	colour	weight	code	W tot	K - ølm - CRI
COB	graphite	7.20	414925-00	246	4000K - 36908lm - CRI 80
			414925-39		3000K - 34324lm - CRI 80
			414925-0035		5700K - 36908lm - CRI 80
COB	graphite	8.50	414926-00	318	4000K - 49474lm - CRI 80
			414926-39		3000K - 46011lm - CRI 80
			414926-0035		5700K - 49474lm - CRI 80
COB	graphite	8.50	414927-00	318	4000K - 54423lm - CRI 70
			414927-0035		5700K - 54423lm - CRI 70

RG0 Ethr
+40 C° -20
U.V.
LOW FLICKER
3000K
4000K
5700K



RG0 Ethr

max C° min

U.V.

LOW FLICKER

3000K

4000K

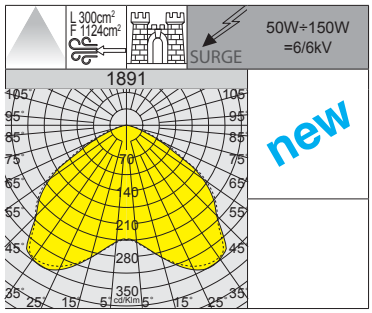

new

100.000h



IP66IK09

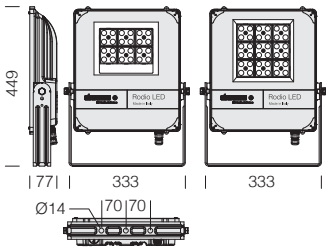

2200K - AMBER (sub-code -73)	
W tot	**LUMEN OUTPUT (tq= 25 °C)**
50	2200K - 6982lm
75	2200K - 10335lm
110	2200K - 16340lm
150	2200K - 20667m

Optics: in high efficiency PMMA.

LED: power factor: ≥0,9.
Luminous flux maintenance 90%: 100.000h (L90B10).

Upon request: special version (with *conformal coating* treatment with **subcode -38**) featuring high chemical resistance for environments with high chlorine content.

1891 Rodio - symmetric wide beam					
		CLD			**LUMEN OUTPUT (tq= 25 °C)**
LED	colour	weight	code	**W tot**	K - ølm - CRI
LED	graphite	5.00	414784-00	**50**	4000K - 7934lm - CRI 80
			414784-39		3000K - 7537lm - CRI 80
LED	graphite	5.00	414785-00	**75**	4000K - 11745lm - CRI 80
			414785-39		3000K - 11158lm - CRI 80
LED	graphite	5.00	414781-00	**110**	4000K - **18569lm** - CRI 80
			414781-39		3000K - **17640lm** - CRI 80
LED	graphite	5.00	414782-00	**150**	4000K - **23486lm** - CRI 80
			414782-39		3000K - **22311lm** - CRI 80

IP66 IK09

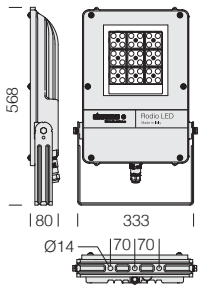

100.000h



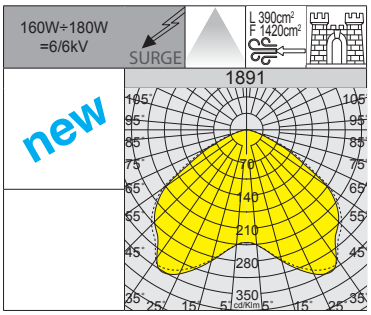

RG0 Ethr · max C° min · U.V. · LOW FLICKER · 3000K · 4000K

Optics: in high efficiency PMMA.

LED: power factor: ≥0,9.
Luminous flux maintenance 90%: 100.000h (L90B10).

2200K - AMBER (sub-code -73)	
W tot	**LUMEN OUTPUT (tq= 25 °C)**
160	2200K - 22510lm
180	2200K - 23870lm

Upon request: special version (with *conformal coating* treatment with **subcode -38**) featuring high chemical resistance for environments with high chlorine content.

1891 Rodio - symmetric wide beam

		CLD			LUMEN OUTPUT (tq= 25 °C)
LED	colour	weight	code	W tot	K - ølm - CRI
LED	graphite	6.00	414787-00	**160**	4000K - **25579lm** - CRI 80
			414787-39		3000K - **24300lm** - CRI 80
LED	graphite	6.00	414783-00	**180**	4000K - **27126lm** - CRI 80
			414783-39		3000K - **25770lm** - CRI 80

IP66 IK09

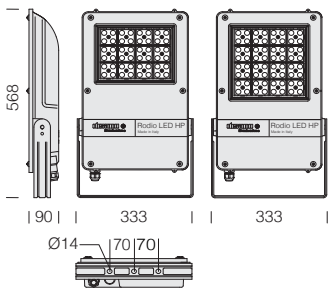

100.000h HP



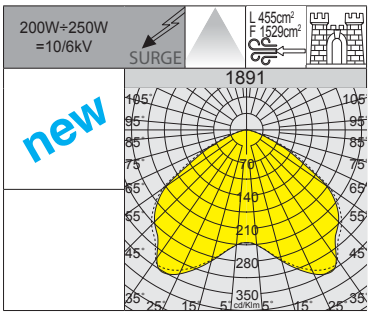

RG0 Ethr · max C° min · U.V. · · LOW FLICKER · 3000K · 4000K

Optics: in high efficiency PMMA.

LED: power factor: ≥0,9.
Luminous flux maintenance 90%: 100.000h (L90B10).

2200K - AMBER (sub-code -73)	
W tot	**LUMEN OUTPUT (tq= 25 °C)**
200	2200K - 27067lm
250	2200K - 36142lm

Upon request: special version (with *conformal coating* treatment with **subcode -38**) featuring high chemical resistance for environments with high chlorine content.

1891 Rodio HP - HIGH PERFORMANCE - symmetric wide beam

		CLD			LUMEN OUTPUT (tq= 25 °C)
LED	colour	weight	code	W tot	K - ølm - CRI
LED	graphite	8.10	414788-00	**200**	4000K - 30757lm - CRI 80
			414788-39		3000K - 28603lm - CRI 80
LED	graphite	8.60	414789-00	**250**	4000K - 41070lm - CRI 80
			414789-39		3000K - 38194lm - CRI 80

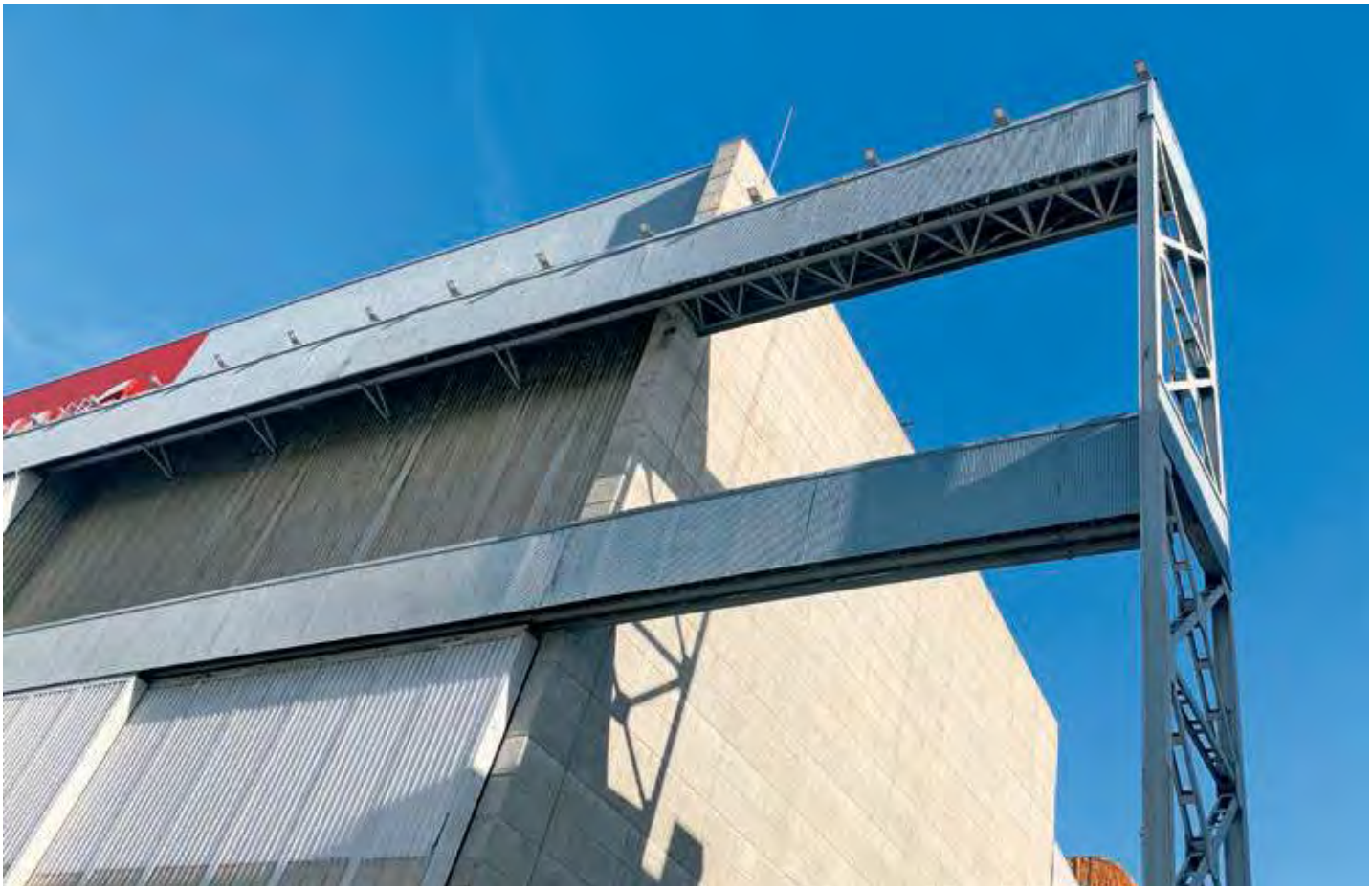

RG0 Ethr

max C° min

U.V.

LOW FLICKER

3000K

4000K

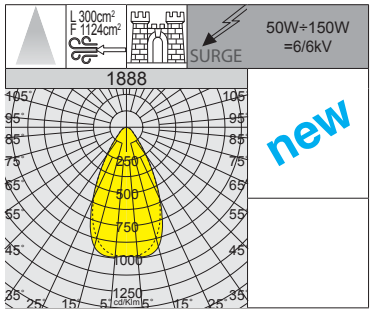

new

100.000h



IP66IK09

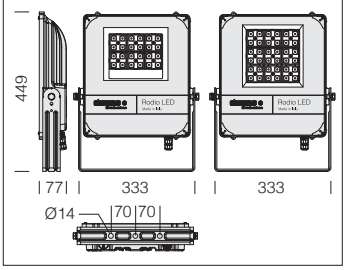

Optics: in high efficiency PMMA.

LED: power factor: ≥0,9.
Luminous flux maintenance 90%: 100.000h (L90B10).

2200K - AMBER (sub-code -73)	
W tot	**LUMEN OUTPUT (tq= 25 °C)**
50	2200K - 8462lm
75	2200K - 10473lm
110	2200K - 16556lm
150	2200K - 20943m

Upon request: special version (with *conformal coating* treatment with **subcode -38**) featuring high chemical resistance for environments with high chlorine content.

1888 Rodio - symmetric narrow beam - FS

		CLD			LUMEN OUTPUT (tq= 25 °C)
LED	colour	weight	code	W tot	K - ølm - CRI
LED	graphite	5.00	414764-00	**50**	4000K - 8039lm - CRI 80
			414764-39		3000K - 7637lm - CRI 80
LED	graphite	5.00	414765-00	**75**	4000K - 11901lm - CRI 80
			414765-39		3000K - 11306lm - CRI 80
LED	graphite	5.00	414732-00	**110**	4000K - **18813lm** - CRI 80
			414732-39		3000K - **17497lm** - CRI 80
LED	graphite	5.00	414733-00	**150**	4000K - **23799lm** - CRI 80
			414733-39		3000K - **22609lm** - CRI 80

IP66 IK09

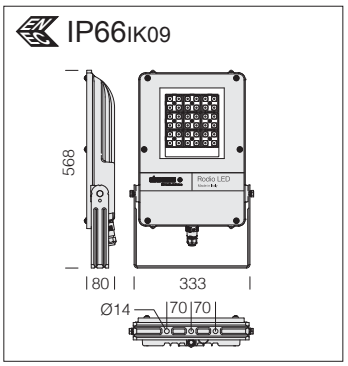



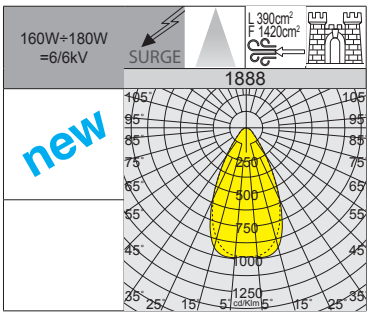

Optics: in high efficiency PMMA.

LED: power factor: ≥0,9.
Luminous flux maintenance 90%: 100.000h (L90B10).

2200K - AMBER (sub-code -73)	
W tot	**LUMEN OUTPUT (tq= 25 °C)**
160	2200K - 22352lm
180	2200K - 24189lm

Upon request: special version (with *conformal coating* treatment with **subcode -38**) featuring high chemical resistance for environments with high chlorine content.

1888 Rodio - symmetric narrow beam - FS

		CLD			LUMEN OUTPUT (tq= 25 °C)
LED	colour	weight	code	W tot	K - ølm - CRI
LED	graphite	6.00	414767-00	**160**	4000K - **25400lm** - CRI 80
			414767-39		3000K - **24130lm** - CRI 80
LED	graphite	6.00	414734-00	**180**	4000K - **27488lm** - CRI 80
			414734-39		3000K - **26113lm** - CRI 80

IP66 IK09

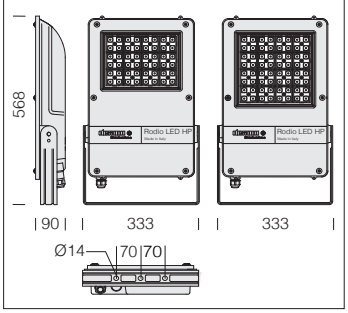



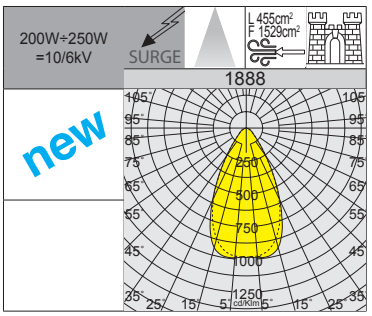

Optics: in high efficiency PMMA.

LED: power factor: ≥0,9.
Luminous flux maintenance 90%: 100.000h (L90B10).

2200K - AMBER (sub-code -73)	
W tot	**LUMEN OUTPUT (tq= 25 °C)**
200	2200K - 26450lm
250	2200K - 36794lm

Upon request: special version (with *conformal coating* treatment with **subcode -38**) featuring high chemical resistance for environments with high chlorine content.

1888 Rodio HP - HIGH PERFORMANCE - symmetric narrow beam - FS

		CLD			LUMEN OUTPUT (tq= 25 °C)
LED	colour	weight	code	W tot	K - ølm - CRI
LED	graphite	8.10	414768-00	**200**	4000K - 30056lm - CRI 80
			414768-39		3000K - 27952lm - CRI 80
LED	graphite	8.60	414769-00	**250**	4000K - 41811lm - CRI 80
			414769-39		3000K - 38884lm - CRI 80



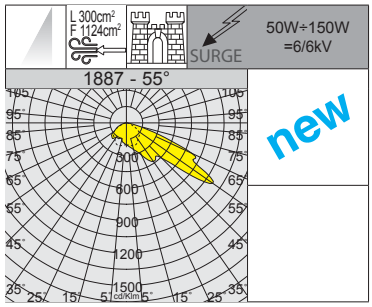

2200K - AMBER (sub-code -73)	
W tot	LUMEN OUTPUT (tq= 25 °C)
50	2200K - 7128lm - 45°
75	2200K - 10560lm - 45°
110	2200K - 16662lm - 45°
	2200K - 16594lm - 55°
150	2200K - 21076lm - 45°
	2200K - 20350lm - 55°



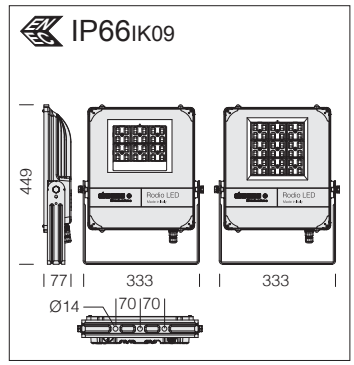

Optics: in high efficiency PMMA.

LED: power factor: ≥0,9.
Luminous flux maintenance 90%: 100.000h (L90B10).

Upon request: special version (with *conformal coating* treatment with **subcode -38**) featuring high chemical resistance for environments with high chlorine content.

1887 Rodio - asymmetric					
		CLD			LUMEN OUTPUT (tq= 25 °C)
LED	colour	weight	code	W tot	K - ølm - CRI - degrees
LED	graphite	5.00	414754-00	**50**	4000K - 8100lm - CRI 80 - 45°
			414754-39		3000K - 7695lm - CRI 80 - 45°
LED	graphite	5.00	414755-00	**75**	4000K - 12000lm - CRI 80 - 45°
			414755-39		3000K - 11400lm - CRI 80 - 45°
LED	graphite	5.00	414723-00	**110**	4000K - **18934lm** - CRI 80 - 45°
			414723-39		3000K - **17987lm** - CRI 80 - 45°
			414724-00		4000K - **18856lm** - CRI 80 - 55°
			414724-39		3000K - **17913lm** - CRI 80 - 55°
LED	graphite	5.00	414725-00	**150**	4000K - **23950lm** - CRI 80 - 45°
			414725-39		3000K - **22753lm** - CRI 80 - 45°
			414726-00		4000K - **23125lm** - CRI 80 - 55°
			414726-39		3000K - **21969lm** - CRI 80 - 55°

IP66 IK09

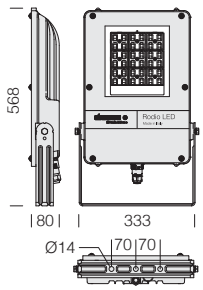

Optics: in high efficiency PMMA.

LED: power factor: ≥0,9.
Luminous flux maintenance 90%: 100.000h (L90B10).

Upon request: special version (with *conformal coating* treatment with **subcode -38**) featuring high chemical resistance for environments with high chlorine content.



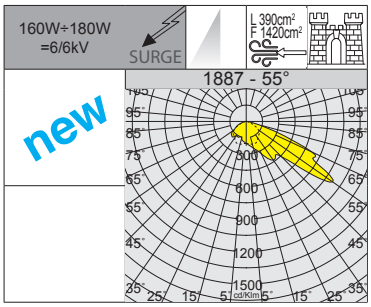

2200K - AMBER (sub-code -73)	
W tot	**LUMEN OUTPUT (tq= 25 °C)**
160	2200K - 22481lm - 45°
	2200K - 22181lm - 55°
180	2200K - 24027lm - 45°
	2200K - 23065lm - 55°

1887 Rodio - asymmetric

		CLD			LUMEN OUTPUT (tq= 25 °C)
LED	colour	weight	code	W tot	K - ølm - CRI - degrees
LED	graphite	6.00	414757-00	**160**	4000K - **25547lm** - CRI 80 - 45°
			414757-39		3000K - **24269lm** - CRI 80 - 45°
			414753-00		4000K - **25206lm** - CRI 80 - 55°
			414753-39		3000K - **23946lm** - CRI 80 - 55°
LED	graphite	6.00	414727-00	**180**	4000K - **27303lm** - CRI 80 - 45°
			414727-39		3000K - **25938lm** - CRI 80 - 45°
			414728-00		4000K - **26211lm** - CRI 80 - 55°
			414728-39		3000K - **24900lm** - CRI 80 - 55°

IP66 IK09

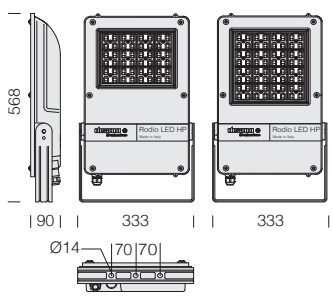

Optics: in high efficiency PMMA.

LED: power factor: ≥0,9.
Luminous flux maintenance 90%: 100.000h (L90B10).

Upon request: special version (with *conformal coating* treatment with **subcode -38**) featuring high chemical resistance for environments with high chlorine content.



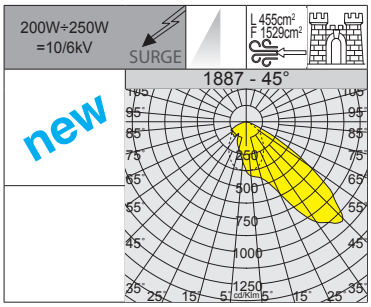

2200K - AMBER (sub-code -73)	
W tot	**LUMEN OUTPUT (tq= 25 °C)**
200	2200K - 26658lm - 45°
	2200K - 26471lm - 55°
250	2200K - 36193lm - 45°
	2200K - 35295lm - 55°

1887 Rodio HP - HIGH PERFORMANCE - asymmetric

		CLD			LUMEN OUTPUT (tq= 25 °C)
LED	colour	weight	code	W tot	K - ølm - CRI - gradi
LED	graphite	8.10	414758-00	**200**	4000K - 30294lm - CRI 80 - 45°
			414758-39		3000K - 28173lm - CRI 80 - 45°
LED	graphite	8.10	414761-00	**200**	4000K - 30081lm - CRI 80 - 55°
			414761-39		3000K - 27975lm - CRI 80 - 55°
LED	graphite	8.60	414759-00	**250**	4000K - 41129lm - CRI 80 - 45°
			414759-39		3000K - 38250lm - CRI 80 - 45°
LED	graphite	8.60	414762-00	**250**	4000K - 40107lm - CRI 80 - 55°
			414762-39		3000K - 37300lm - CRI 80 - 55°



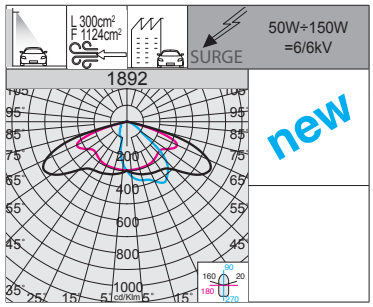

2200K - AMBER (sub-code -73)	
W tot	**LUMEN OUTPUT (tq= 25 °C)**
50	2200K - 6453lm
75	2200K - 9551lm
110	2200K - 15145lm
150	2200K - 19102lm



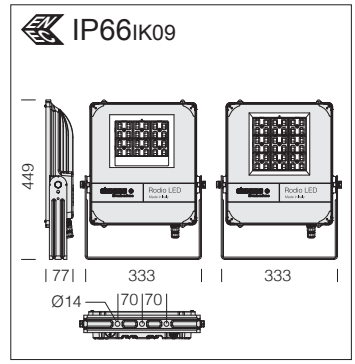

Optics: in high efficiency PMMA.

LED: power factor: ≥0,9.
Luminous flux maintenance 90%: 100.000h (L90B10).

1892 Rodio - street optics

		CLD		CLD MIDNIGHT		LUMEN OUTPUT (tq= 25 °C)
LED	colour	weight	code	code	W tot	K - ølm - CRI
LED	graphite	5.00	414774-00	414774-30	**50**	4000K - 7333lm - CRI 80
			414774-39	414774-3028		3000K - 6966lm - CRI 80
LED	graphite	5.00	414775-00	414775-30	**75**	4000K - 10854lm - CRI 80
			414775-39	414775-3028		3000K - 10311lm - CRI 80
LED	graphite	5.00	414747-00	414747-30	**110**	4000K - **17211lm** - CRI 80
			414747-39	414747-3028		3000K - **16350lm** - CRI 80
LED	graphite	5.00	414748-00	414748-30	**150**	4000K - **21707lm** - CRI 80
			414748-39	414748-3028		3000K - **20622lm** - CRI 80

VIRTUAL MIDNIGHT: the fixture reduces its luminous flux through a self-learning process which, depending on the previous switching on and off times, will determine a hypothetical "virtual midnight". This is the average value between the time the fixture is switched on (sunset) and switched off (sunrise).



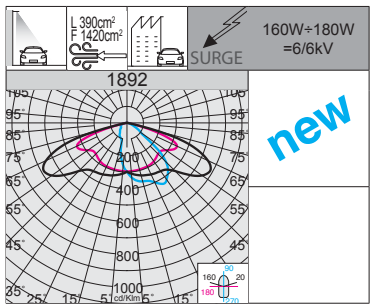

2200K - AMBER (sub-code -73)	
W tot	**LUMEN OUTPUT (tq= 25 °C)**
160	2200K - 20804lm
180	2200K - 22061lm



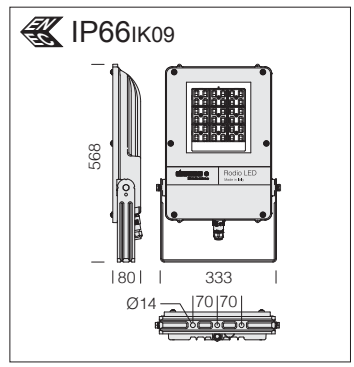

Optics: in high efficiency PMMA.

LED: power factor: ≥0,9.
Luminous flux maintenance 90%: 100.000h (L90B10).

1892 Rodio - street optics

		CLD		CLD MIDNIGHT		LUMEN OUTPUT (tq= 25 °C)
LED	colour	weight	code	code	W tot	K - ølm - CRI
LED	graphite	6.00	414777-00	414777-30	**160**	4000K - **23641lm** - CRI 80
			414777-39	414777-3028		3000K - **22459lm** - CRI 80
LED	graphite	6.00	414749-00	414749-30	**180**	4000K - **25070lm** - CRI 80
			414749-39	414749-3028		3000K - **23817lm** - CRI 80

VIRTUAL MIDNIGHT: the fixture reduces its luminous flux through a self-learning process which, depending on the previous switching on and off times, will determine a hypothetical "virtual midnight". This is the average value between the time the fixture is switched on (sunset) and switched off (sunrise).

Virtual Midnight subcode -30: fixtures are equipped with a device to reduce flux in **4 steps** based on the calculation of the virtual midnight.

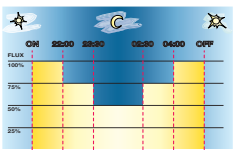

Factory settings	
Time	Flux
on ÷ 22:00	100%
22:00 ÷ 23:30	75%
23:30 ÷ 02:30	50%
02:30 ÷ 04:00	75%
04:00 ÷ off	100%

Virtual midnight in 2 steps subcode -35

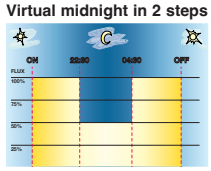

Settings upon request	
Time	Flux
on ÷ 22:30	100%
22:30 ÷ 04:30	50%
04:30 ÷ off	100%

Virtual midnight in 5 steps subcode -32

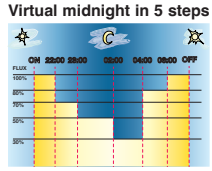

Settings upon request	
Time	Flux
on ÷ 22:00	100%
22:00 ÷ 23:00	70%
23:00 ÷ 02:00	50%
02:00 ÷ 04:00	30%
04:00 ÷ 06:00	80%
06:00 ÷ off	100%

ATTENTION: *original settings and time slots for the "virtual midnight" value can be customized in up to 5 steps upon request.*

IP66IK09

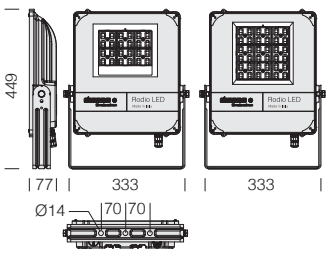



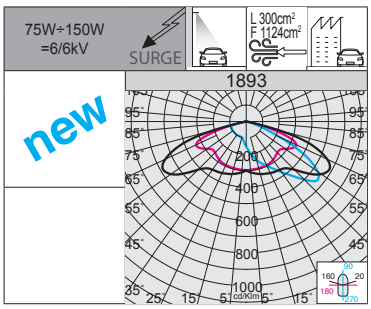

RG0 Ethr

max C° min

U.V.

LOW FLICKER

Optics: in high efficiency PMMA.

LED: power factor: ≥0,9.
Luminous flux maintenance 90%: 100.000h (L90B10).

2200K - AMBER (sub-code -73)	
W tot	**LUMEN OUTPUT (tq= 25 °C)**
75	2200K - 9551lm
110	2200K - 15145lm
150	2200K - 19102lm

VIRTUAL MIDNIGHT: the fixture reduces its luminous flux through a self-learning process which, depending on the previous switching on and off times, will determine a hypothetical "virtual midnight". This is the average value between the time the fixture is switched on (sunset) and switched off (sunrise).

1893 Rodio - street optics - large areas

		CLD		CLD MIDNIGHT		LUMEN OUTPUT (tq= 25 °C)
LED	colour	weight	code	code	W tot	K - ølm - CRI
LED	graphite	5.00	414763-00	414763-30	**75**	4000K - 10854lm - CRI 80
			414763-39	414763-3028		3000K - 10311lm - CRI 80
LED	graphite	5.00	414798-00	414798-30	**110**	4000K - **17211lm** - CRI 80
			414798-39	414798-3028		3000K - **16350lm** - CRI 80
LED	graphite	5.00	414799-00	414799-30	**150**	4000K - **21707lm** - CRI 80
			414799-39	414799-3028		3000K - **20622lm** - CRI 80

IP66IK09

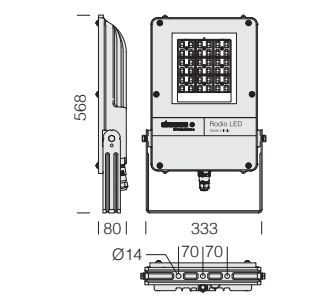



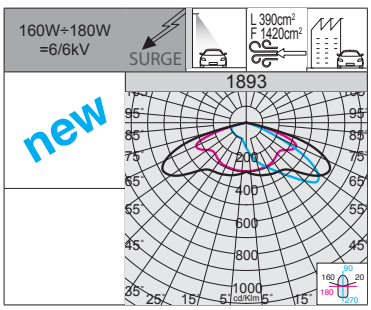

RG0 Ethr

max C° min

U.V.

LOW FLICKER

Optics: in high efficiency PMMA.

LED: power factor: ≥0,9.
Luminous flux maintenance 90%: 100.000h (L90B10).

2200K - AMBER (sub-code -73)	
W tot	**LUMEN OUTPUT (tq= 25 °C)**
160	2200K - 20804lm
180	2200K - 22061lm

VIRTUAL MIDNIGHT: the fixture reduces its luminous flux through a self-learning process which, depending on the previous switching on and off times, will determine a hypothetical "virtual midnight". This is the average value between the time the fixture is switched on (sunset) and switched off (sunrise).

1893 Rodio - street optics - large areas

		CLD		CLD MIDNIGHT		LUMEN OUTPUT (tq= 25 °C)
LED	colour	weight	code	code	W tot	K - ølm - CRI
LED	graphite	6.00	414779-00	414779-30	**160**	4000K - **23641lm** - CRI 80
			414779-39	414779-3028		3000K - **22459lm** - CRI 80
LED	graphite	6.00	414746-00	414746-30	**180**	4000K - **25070lm** - CRI 80
			414746-39	414746-3028		3000K - **23817lm** - CRI 80

Virtual Midnight subcode -30: fixtures are equipped with a device to reduce flux in **4 steps** based on the calculation of the virtual midnight.

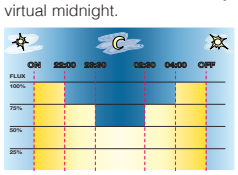

Factory settings	
Time	Flux
on ÷ 22:00	100%
22:00 ÷ 23:30	75%
23:30 ÷ 02:30	50%
02:30 ÷ 04:00	75%
04:00 ÷ off	100%

Virtual midnight in 2 steps subcode -35

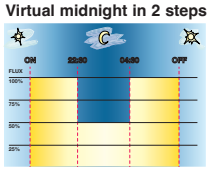

Settings upon request	
Time	Flux
on ÷ 22:30	100%
22:30 ÷ 04:30	50%
04:30 ÷ off	100%

Virtual midnight in 5 steps subcode -32

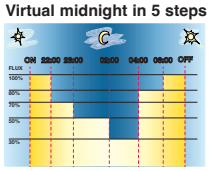

Settings upon request	
Time	Flux
on ÷ 22:00	100%
22:00 ÷ 23:00	70%
23:00 ÷ 02:00	50%
02:00 ÷ 04:00	30%
04:00 ÷ 06:00	80%
06:00 ÷ off	100%

ATTENTION: *original settings and time slots for the "virtual midnight" value can be customized in up to 5 steps upon request.*



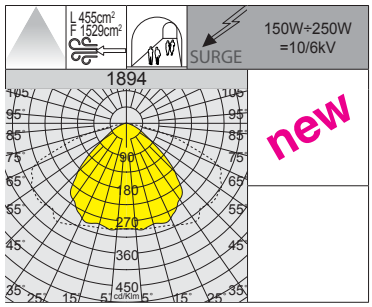



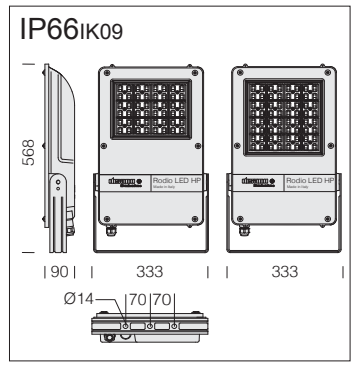

Optics: in high efficiency PMMA.

LED: power factor: ≥0,9.
Luminous flux maintenance 90%: 100.000h (L90B10).

* 2200K - AMBER (sub-code -73)	
W tot	**LUMEN OUTPUT (tq= 25 °C)**
150	2200K - 19599lm
250	2200K - 348203lm

1894 Rodio HP - HIGH PERFORMANCE - TUNNEL

		CLD		CLD MIDNIGHT		LUMEN OUTPUT (tq= 25 °C)
LED	colour	weight	code	code	W tot	K - ølm - CRI
LED	graphite	8.10	414744-00	414744-30	**150**	4000K - **22272lm** - CRI 80
			414744-39	414744-3028		3000K - **21159lm** - CRI 80
LED	graphite	8.60	414745-00	414745-30	**250**	4000K - **39569lm** - CRI 80
			414745-39	414745-3028		3000K - **37590lm** - CRI 80

VIRTUAL MIDNIGHT: the fixture reduces its luminous flux through a self-learning process which, depending on the previous switching on and off times, will determine a hypothetical "virtual midnight". This is the average value between the time the fixture is switched on (sunset) and switched off (sunrise).

Virtual Midnight subcode -30: fixtures are equipped with a device to reduce flux in **4 steps** based on the calculation of the virtual midnight.

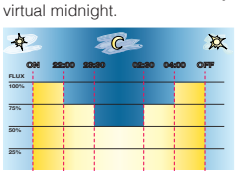

Factory settings	
Time	Flux
on ÷ 22:00	100%
22:00 ÷ 23:30	75%
23:30 ÷ 02:30	50%
02:30 ÷ 04:00	75%
04:00 ÷ off	100%

Virtual midnight in 2 steps subcode -35

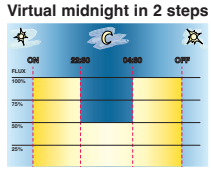

Settings upon request	
Time	Flux
on ÷ 22:30	100%
22:30 ÷ 04:30	50%
04:30 ÷ off	100%

Virtual midnight in 5 steps subcode -32

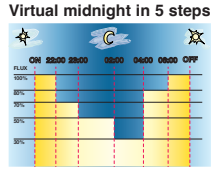

Settings upon request	
Time	Flux
on ÷ 22:00	100%
22:00 ÷ 23:00	70%
23:00 ÷ 02:00	50%
02:00 ÷ 04:00	30%
04:00 ÷ 06:00	80%
06:00 ÷ off	100%

ATTENTION: *original settings and time slots for the "virtual midnight" value can be customized in up to 5 steps upon request.*

IP66 IK09

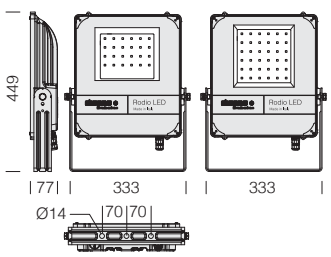

LED: power factor: ≥0,9.
Luminous flux maintenance 90%: 100.000h (L90B10).



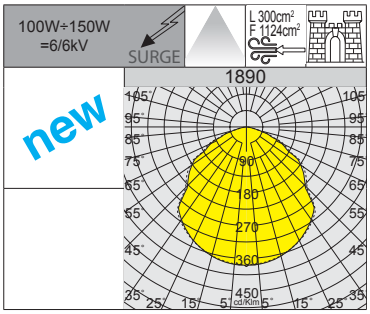

RG0 Ethr
max C° min
U.V.
LOW FLICKER
3000K
4000K

1890 Rodio - symmetric wide beam					
		CLD			LUMEN OUTPUT (tq= 25 °C)
LED	colour	weight	code	W tot	K - ølm - CRI
LED	graphite	5.00	414790-00	**100**	4000K - 15584lm - CRI 80
			414790-39		3000K - 14805lm - CRI 80
LED	graphite	5.00	414797-00	**150**	4000K - **23610lm** - CRI 80
			414797-39		3000K - **22492lm** - CRI 80

IP66 IK09

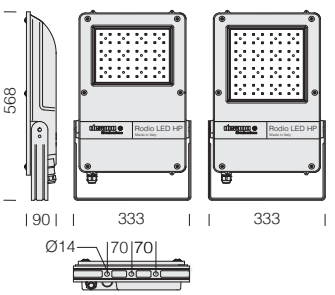

LED: power factor: ≥0,9.
Luminous flux maintenance 90%: 100.000h (L90B10).



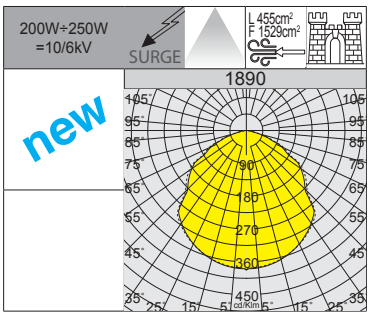

RG0 Ethr
max C° min
U.V.
LOW FLICKER
3000K
4000K

1890 Rodio HP - HIGH PERFORMANCE - symmetric wide beam					
		CLD			LUMEN OUTPUT (tq= 25 °C)
LED	colour	weight	code	W tot	K - ølm - CRI
LED	graphite	8.10	414794-00	**200**	4000K - 30769lm - CRI 80
			414794-39		3000K - 28615lm - CRI 80
LED	graphite	8.60	414795-00	**250**	4000K - 41889lm - CRI 80
			414795-39		3000K - 38957lm - CRI 80

Design examples with Rodio HP PADEL



Field dimensions:
- Length: 20.00 m
- Width: 10.00 m
- Pole height: 6,50 m

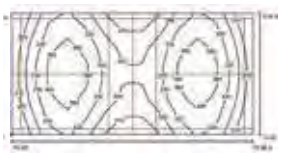



Quantity	Product	Φ [lm]	P [W]
8	art. 1889 - Rodio HP PADEL	21774.0	136.0
		Tot.: 174192.0	Tot.: 1088.0

Luminance:

Type	E_m [lx]	E_{min} [lx]	E_{max} [lx]	E_{min} / E_m	E_{min} / E_{max}	camera
horizontal	350	270	387	0.77	0.64	-

Field dimensions:
- Length: 20.00 m
- Width: 10.00 m
- Pole height: 6,50 m

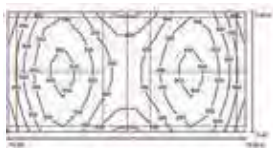



Quantity	Product	Φ [lm]	P [W]
8	art. 1889 - Rodio HP PADEL	35383.0	265.0
		Tot.: 283064.0	Tot.: 2120.0

Luminance:

Type	E_m [lx]	E_{min} [lx]	E_{max} [lx]	E_{min} / E_m	E_{min} / E_{max}	camera
horizontal	582	439	692	0.754	0.64	-

RGO Ethr

max C° min

U.V.

LOW FLICKER

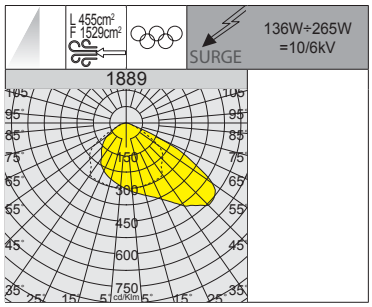



IP66IK09

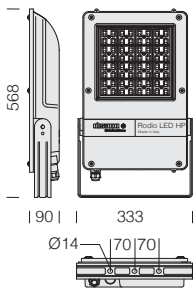

Optics: in high efficiency PMMA.

LED: power factor: ≥0,9.
Luminous flux maintenance 90%: 100.000h (L90B10).

1889 Rodio PADEL - HIGH EFFICIENCY					
		CLD			LUMEN OUTPUT (tq= 25 °C)
LED	colour	weight	code	W tot	K - ølm - CRI
LED	graphite	7.70	414793-00	**136**	4000K - 21775lm - CRI 80
		8.60	414796-00	**265**	4000K - 35383lm - CRI 80



IP66IK09

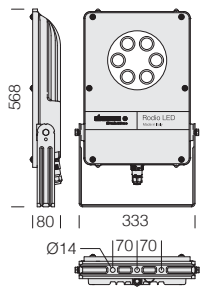

For DMX management of the luminaire, see the section about DMX controllers and accessories (*chapter Lighting management systems - DMX solution for LED RGBW).*



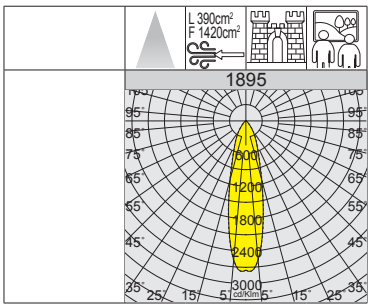

RG0 Ethr

+40 C° -20

U.V.

RGBW DMX RDM

1895 Rodio - LED RGBW DMX/RDM					
		CLD DMX			LUMEN OUTPUT (tq= 25 °C)
LED	colour	weight	code	W tot	K - ølm - degrees
LED RGBW	graphite	6.00	414830-00	**max. 50**	R= 387lm - G= 604lm - B= 137lm W= 630lm (4000K) - 26°

Upon request: DMX start address 1 (1=RED 2=GREEN 3=BLUE 4=WHITE)
- Without DMX signal (loss of signal or upon start-up): functions at 100% WHITE with no light shows
- With DMX signal: stage light effects sent from the central control unit

Upon request:
1) Custom DMX addressing
2) STAND ALONE colour selection (Red, Green, Blue, White or any other colour such as Orange, Pink, Light Blue, Purple, etc.)
3) DMX PERSONALITY setting: in case of loss of DMX signal, the fixture will set itself to a random colour, which can be either the same or different from the STAND ALONE colour (to be specified upon ordering)



GENERAL CHARACTERISTICS

Housing: in die-cast aluminium, EN-AB 47100 alloy and designed with a very small surface exposed to wind. Cooling fins integrated in the cover

Optics: high-performance, anti-yellowing PMMA secondary lenses, or polycarbonate (art. 1281/1283/1284/1285) highly resistant to temperature and UV radiation.

Diffuser: extra-clear, tempered glass, 4 mm thick, resistant to thermal shock and impacts (UNI-EN 12150-1 : 2001).

Coating: the fully automated powder-coating cycle involves a polyester-based, salt-spray corrosion-resistant and UV-stabilised paint.

Standard supply: complete with galvanised and coated bracket with graduated scale goniometer which allows for accurate pointing; external screws and bolts in stainless steel; air recirculation valve. Waterproof connector for quick installation with **no need to open the fixture.**

OTHER CHARACTERISTICS

SURGE

Electronic safety device to protect the LED module and the related ballast compliant with EN 61547. It works in two modes:
- differential mode: surge between power cables and between the phase and neutral.
- common mode: surge between power, L/N and ground cables or between the fixture's body if it is of class II and installed on a metal pole.

On request: protection up to 10KV.

LOW FLICKER

Product with a very low flicker; uniform light for greater eye protection.

The fixture's design is configured to minimise wind exposure surfaces:
Mini Cromo = L:440cm² F:1373cm²



OTHER INFORMATION



The heat dissipation system was designed and manufactured to allow LED operation at adequate temperatures and guarantee excellent performance/efficiency and long life.



Precision optics that allow broad design flexibility guaranteeing high levels of light quality.

UPON REQUEST

Possibility of centralized lighting point control or via **external** presence/lighting sensors (see chapter *Lighting management systems and recommendations*).

Availlable version with predisposiston for:
- **Zhaga Socket** order with **subcode -0054**
- **Nema Socket** order with **subcode -40**

The end user can install any type of wireless controller (to be purchased separately) turning the fixture into a **SMART** fixture and capable of being managed with the most common lighting control systems available on the market.

Protective coating recommended for marine environments within 5 km of the sea.

LED 5700K

Availlable version with LED **5700K - CRI>80** with **subcode -6035.**

LED AMBER

Version with **LED AMBER 2200K** with subcode **-73**
Note: when ordering, make sure you select the **AMBER LED** type best suited for your lighting design and installation needs.

ACCESSORIES

acc. 197 adjustable light beam pointing mount		
RAL 7021	30°-60°-65° vers.	995799-00
Adjustable light beam pointing support for asymmetric versions.		

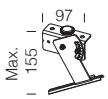

acc. 462 protection guard	
black	997937-00
Plastic-coated steel rod. For protection against impact.	

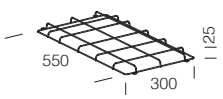

acc. 199 fixed light beam pointing mount	
RAL 7021	995793-00
Fixed light beam pointing support for symmetric versions.	

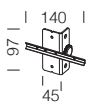

acc. 463 conveyor	
RAL 7021	997938-00
To be used for conveying the light beam in a single direction.	

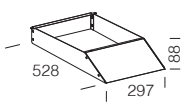

acc. 333 Ø60 pole mounting	
RAL 7021	997915-21
Made of aluminium. To be used to apply the fixture on a ø 60 pole.	

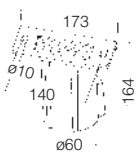

acc. 476 high efficiency light conveyor	
RAL 7021	997944-00
Externally coated aluminium with a high-gloss aluminium interior.	

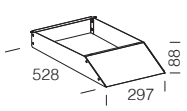

acc. 334 Ø76 pole mounting	
RAL 7021	997916-21
Made of aluminium. To be used to apply the fixture on a ø 76 pole.	

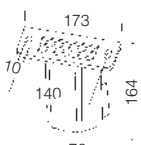



Mini Cromo with acc. 476, high-efficiency light conveyor: it allows the beam to be directed towards the target area, increasing illuminance levels (lux) while preventing stray light from falling outside the designated zone (light spill).

RG0 Ethr | +40 C° -40 | U.V. | | | LOW FLICKER | 3000K | 4000K | 5700K

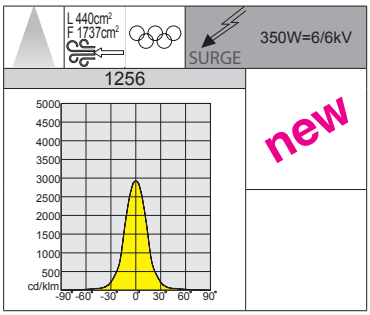



IP66 IK09

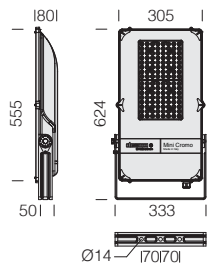

LED: power factor: ≥0,92. Luminous flux maintenance 90%: 100.000h (L90B10).

Upon request version with:
- **CLD D-D (DALI)** wiring with **subcode -0041.**
- special version (with *conformal coating* treatment with **subcode -38**) featuring high chemical resistance for environments with high chlorine content.

Upon request: (subcode -6035)	
LED	5700K - CRI>80

1256 Mini Cromo - symmetric - "MS"

		CLD			LUMEN OUTPUT (tq= 25 °C)
LED	colour	weight	code	W tot	K - ølm - CRI
LED	RAL 7021	10.30	410940-00	**350**	4000K - **49681lm** - CRI 70
			410940-39		3000K - **47197lm** - CRI 70
			410940-0035		5700K - **49681lm** - CRI 70

RG0 Ethr | +40 C° -40 | U.V. | | | LOW FLICKER | 3000K | 4000K | 5700K

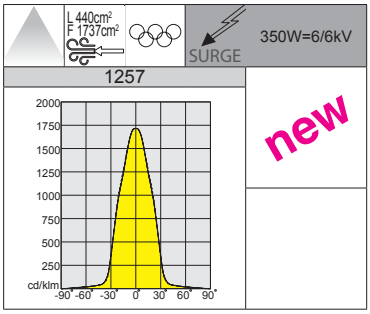



IP66 IK09

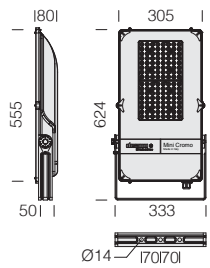

LED: power factor: ≥0,92. Luminous flux maintenance 90%: 100.000h (L90B10).

Upon request version with:
- **CLD D-D (DALI)** wiring with **subcode -0041.**
- special version (with *conformal coating* treatment with **subcode -38**) featuring high chemical resistance for environments with high chlorine content.

Upon request: (subcode -6035)	
LED	5700K - CRI>80

1257 Mini Cromo - symmetric - "M"

		CLD			LUMEN OUTPUT (tq= 25 °C)
LED	colour	weight	code	W tot	K - ølm - CRI
LED	RAL 7021	10.30	410950-00	**350**	4000K - **49040lm** - CRI 70
			410950-39		3000K - **46588lm** - CRI 70
			410950-0035		5700K - **49040lm** - CRI 70

IP66IK09

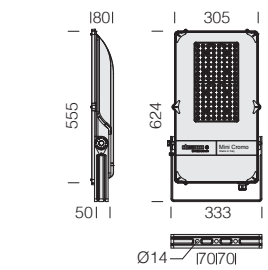

LED: power factor: ≥0,92. Luminous flux maintenance 90%: 100.000h (L90B10).

Upon request version with:
• **CLD D-D (DALI)** wiring with **subcode -0041.**

• special version (with *conformal coating* treatment with **subcode -38**) featuring high chemical resistance for environments with high chlorine content.

100.000h



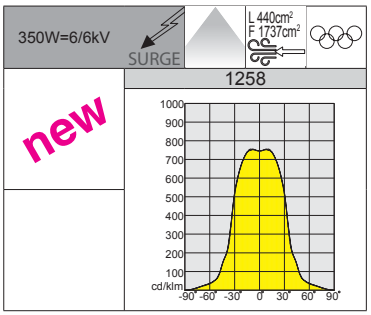

Upon request: (subcode -6035)	
LED	5700K - CRI>80

1258 Mini Cromo - symmetric - "W"

		CLD			LUMEN OUTPUT (tq= 25 °C)
LED	colour	weight	code	W tot	K - ølm - CRI
LED	RAL 7021	10.30	410960-00	**350**	4000K - **50818lm** - CRI 70
			410960-39		3000K - **48277lm** - CRI 70
			410960-0035		5700K - **50818lm** - CRI 70

IP66IK09

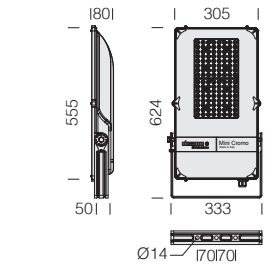

LED: power factor: ≥0,92. Luminous flux maintenance 90%: 100.000h (L90B10).

Upon request version with:
• **CLD D-D (DALI)** wiring with **subcode -0041.**

• special version (with *conformal coating* treatment with **subcode -38**) featuring high chemical resistance for environments with high chlorine content.

100.000h



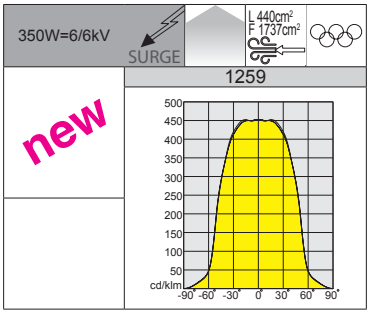

Upon request: (subcode -6035)	
LED	5700K - CRI>80

1259 Mini Cromo - symmetric - "XW"

		CLD			LUMEN OUTPUT (tq= 25 °C)
LED	colour	weight	code	W tot	K - ølm - CRI
LED	RAL 7021	10.30	410970-00	**350**	4000K - **50860lm** - CRI 70
			410970-39		3000K - **48317lm** - CRI 70
			410970-0035		5700K - **50860lm** - CRI 70

RG0 Ethr | +40 C° -40 | U.V. | LOW FLICKER | 3000K | 4000K | 5700K

1252 - AS 30°

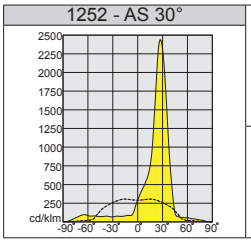

new

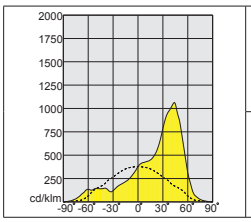

new

Upon request: 45° asymmetric version availlable.

Upon request: (subcode -6035)	
LED	5700K - CRI>80

100.000h

30° BEAM



IP66 IK09

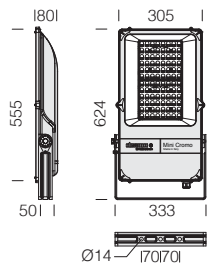

LED: power factor: ≥0,92. Luminous flux maintenance 90%: 100.000h (L90B10).

Upon request version with:
- **CLD D-D (DALI)** wiring with **subcode -0041.**
- special version (with *conformal coating* treatment with **subcode -38**) featuring high chemical resistance for environments with high chlorine content.

1252 Mini Cromo - asymmetric 30°

		CLD			LUMEN OUTPUT (tq= 25 °C)
LED	couleur	poids	code	W tot	K - ølm - CRI - degrees
LED	RAL 7021	10.30	410900-00	**350**	4000K - **50608lm** - CRI 70 - 30°
			410900-39		3000K - **48078lm** - CRI 70 - 30°
			410900-0035		5700K - **50608lm** - CRI 70 - 30°

RG0 Ethr | +40 C° -40 | U.V. | LOW FLICKER | 3000K | 4000K | 5700K

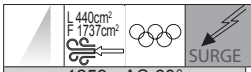

1253 - AS 60°

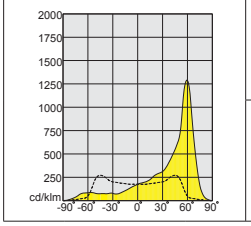

new

Upon request: (subcode -6035)	
LED	5700K - CRI>80

100.000h

60° BEAM



IP66 IK09

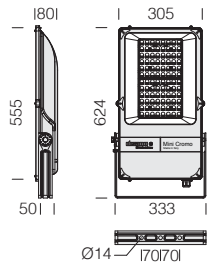

LED: power factor: ≥0,92. Luminous flux maintenance 90%: 100.000h (L90B10).

Upon request version with:
- **CLD D-D (DALI)** wiring with **subcode -0041.**
- special version (with *conformal coating* treatment with **subcode -38**) featuring high chemical resistance for environments with high chlorine content.

1253 Mini Cromo - asymmetric 60°

		CLD			LUMEN OUTPUT (tq= 25 °C)
LED	couleur	poids	code	W tot	K - ølm - CRI - degrees
LED	RAL 7021	10.30	410910-00	**310**	4000K - **44525lm** - CRI 70 - 60°
			410910-39		3000K - **42299lm** - CRI 70 - 60°
			410910-0035		5700K - **44525lm** - CRI 70 - 60°

IP66 IK09

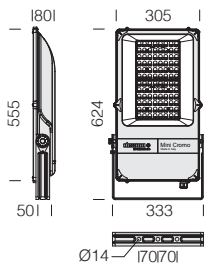

LED: power factor: ≥0,92. Luminous flux maintenance 90%: 100.000h (L90B10).

Upon request version with:
• **CLD D-D (DALI)** wiring with **subcode -0041.**

• special version (with *conformal coating* treatment with **subcode -38**) featuring high chemical resistance for environments with high chlorine content.



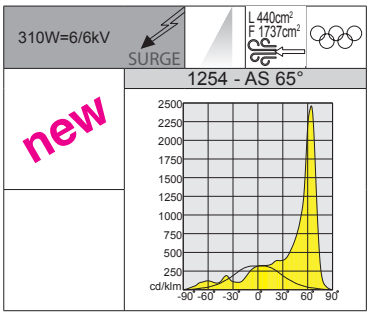

Upon request: (subcode -6035)	
LED	5700K - CRI>80

1254 Mini Cromo - asymmetric 65°

		CLD			LUMEN OUTPUT (tq= 25 °C)
LED	couleur	poids	code	W tot	K - ølm - CRI - degrees
LED	RAL 7021	10.30	410920-00	**310**	4000K - **44315lm** - CRI 70 - 65°
			410920-39		3000K - **42099lm** - CRI 70 - 65°
			410920-0035		5700K - **44315lm** - CRI 70 - 65°

IP66 IK09

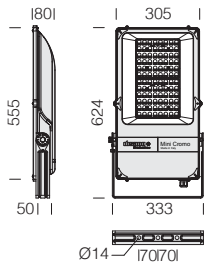

LED: power factor: ≥0,92. Luminous flux maintenance 90%: 100.000h (L90B10).

Upon request version with:
• **CLD D-D (DALI)** wiring with **subcode -0041.**

• special version (with *conformal coating* treatment with **subcode -38**) featuring high chemical resistance for environments with high chlorine content.



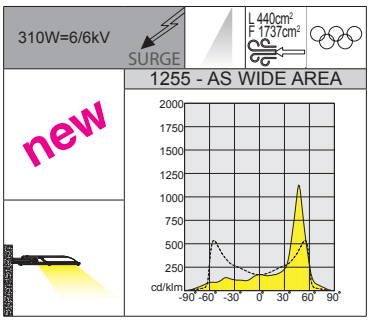

WIDE AREA version, ideal for applications where the glass is parallel to the surface to be illuminated.

Upon request: (subcode -6035)	
LED	5700K - CRI>80

1255 Mini Cromo - asymmetric WIDE AREA

		CLD			LUMEN OUTPUT (tq= 25 °C)
LED	couleur	poids	code	W tot	K - ølm - CRI - degrees
LED	RAL 7021	10.30	410930-00	**310**	4000K - **45392lm** - CRI 70
			410930-39		3000K - **43122lm** - CRI 70
			410930-0035		5700K - **45392lm** - CRI 70

RG0 Ethr | +40 C° -40 | U.V. | | | LOW FLICKER | 3000K | 4000K | 5700K

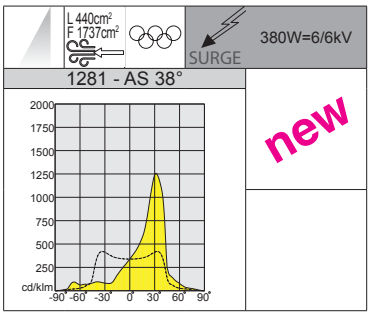

Upon request: (subcode -6035)	
LED	5700K - CRI>80



IP66 IK09

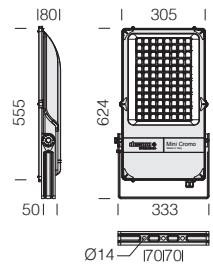

LED: power factor: ≥0,92. Luminous flux maintenance 90%: 100.000h (L90B10).

Upon request version with:
- **CLD D-D (DALI)** wiring with **subcode -0041.**
- special version (with *conformal coating* treatment with **subcode -38**) featuring high chemical resistance for environments with high chlorine content.

1281 Mini Cromo - asymmetric 38°

		CLD			LUMEN OUTPUT (tq= 25 °C)
LED	colour	weight	code	W tot	K - ølm - CRI - degrees
LED	RAL 7021	10.30	411100-00	**380**	4000K - **59050lm** - CRI 70 - 38°
			411100-39		3000K - **52730lm** - CRI 70 - 38°
			411100-0035		5700K - **59050lm** - CRI 70 - 38°

RG0 Ethr | +40 C° -40 | U.V. | | | LOW FLICKER | 3000K | 4000K | 5700K

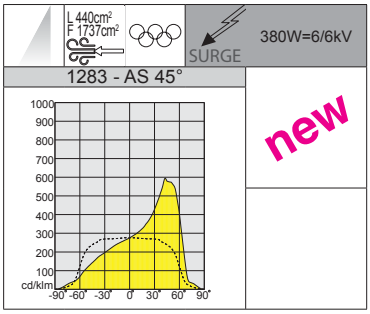

Upon request: (subcode -6035)	
LED	5700K - CRI>80



IP66 IK09

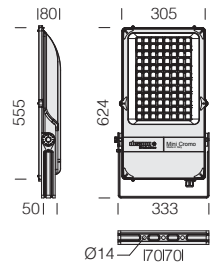

LED: power factor: ≥0,92. Luminous flux maintenance 90%: 100.000h (L90B10).

Upon request version with:
- **CLD D-D (DALI)** wiring with **subcode -0041.**
- special version (with *conformal coating* treatment with **subcode -38**) featuring high chemical resistance for environments with high chlorine content.

1283 Mini Cromo - asymmetric 45°

		CLD			LUMEN OUTPUT (tq= 25 °C)
LED	colour	weight	code	W tot	K - ølm - CRI - degrees
LED	RAL 7021	10.30	411110-00	**380**	4000K - **62485lm** - CRI 70 - 45°
			411110-39		3000K - **58111lm** - CRI 70 - 45°
			411110-0035		5700K - **62485lm** - CRI 70 - 45°

IP66 IK09

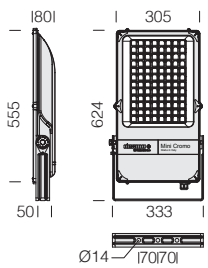

LED: power factor: ≥0,92. Luminous flux maintenance 90%: 100.000h (L90B10).

Upon request version with:
- **CLD D-D (DALI)** wiring with **subcode -0041.**
- special version (with *conformal coating* treatment with **subcode -38**) featuring high chemical resistance for environments with high chlorine content.



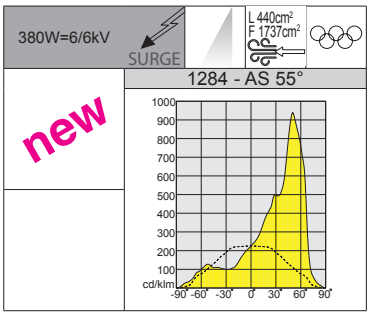

Upon request: (subcode -6035)	
LED	5700K - CRI>80

1284 Mini Cromo - asymmetric 55°

		CLD			LUMEN OUTPUT (tq= 25 °C)
LED	colour	weight	code	W tot	K - ølm - CRI - degrees
LED	RAL 7021	10.30	411120-00	**380**	4000K - **59720lm** - CRI 70 - 55°
			411120-39		3000K - **55539lm** - CRI 70 - 55°
			411120-0035		5700K - **59720lm** - CRI 70 - 55°

IP66 IK09

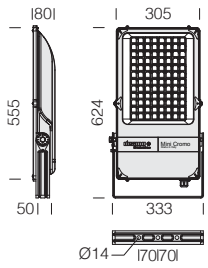

LED: power factor: ≥0,92. Luminous flux maintenance 90%: 100.000h (L90B10).

Upon request version with:
- **CLD D-D (DALI)** wiring with **subcode -0041.**
- special version (with *conformal coating* treatment with **subcode -38**) featuring high chemical resistance for environments with high chlorine content.



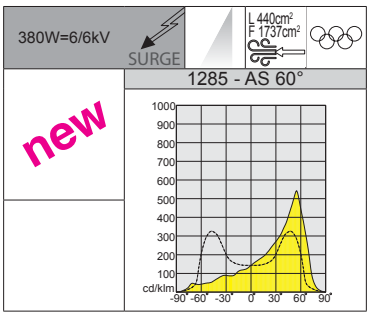

Upon request: (subcode -6035)	
LED	5700K - CRI>80

1285 Mini Cromo - asymmetric 60°

		CLD			LUMEN OUTPUT (tq= 25 °C)
LED	colour	weight	code	W tot	K - ølm - CRI - degrees
LED	RAL 7021	10.30	411130-00	**380**	4000K - **60407lm** - CRI 70 - 60°
			411130-39		3000K - **56158lm** - CRI 70 - 60°
			411130-0035		5700K - **60407lm** - CRI 70 - 60°



GENERAL CHARACTERISTICS

Housing: in die-cast aluminium, EN-AB 47100 alloy and designed with a very small surface exposed to wind. Cooling fins integrated in the cover.

Optics: high-performance, anti-yellowing PMMA secondary lenses, highly resistant to temperature and UV radiation.

Diffuser: extra-clear, tempered glass, 4 mm thick, resistant to thermal shock and impacts (UNI-EN 12150-1 : 2001).

Coating: the fully automated powder-coating cycle involves a polyester-based, salt-spray corrosion-resistant and UV-stabilised paint.

Standard supply: complete with galvanised and coated bracket with graduated scale goniometer which allows for accurate pointing; external screws and bolts in stainless steel; air recirculation valve. Waterproof connector for quick installation with **no need to open the fixture.**

LOW FLICKER

Product with a very low flicker; uniform light for greater eye protection.

OTHER CHARACTERISTICS

SURGE

Electronic safety device to protect the LED module and the related ballast compliant with EN 61547. It works in two modes:
- differential mode: surge between power cables and between the phase and neutral.
- common mode: surge between power, L/N and ground cables or between the fixture's body if it is of class II and installed on a metal pole.

On request: protection up to 10KV.

Registered Design DM/100271

The International Bureau of the World Intellectual Property Organization (WIPO) hereby certifies that the particulars given below correspond to the recording made in the International Register of Industrial Designs.

Products compliant with ball impact resistance test standard DIN 18032-3: 2018.

The ENEC Plus mark certifies that the LED luminaires are compliant and reliable in terms of safety and declared performance.

OTHER INFORMATION



The heat dissipation system was designed and manufactured to allow LED operation at adequate temperatures and guarantee excellent performance/efficiency and long life.



Precision optics that allow broad design flexibility guaranteeing high levels of light quality.

UPON REQUEST

Possibility of centralized lighting point control or via **external** presence/lighting sensors (see chapter *Lighting management systems and recommendations*).

Availlable version with predisposiston for:
- **Zhaga Socket** order with **subcode -0054**
- **Nema Socket** order with **subcode -40**

The end user can install any type of wireless controller (to be purchased separately) turning the fixture into a **SMART** fixture and capable of being managed with the most common lighting control systems available on the market.

DIMM DIG

Version **CLD D-D (DALI)** wiring with **subcode -0041:** thanks to pre-programmed settings or a software programme, this type of wiring allows accurate light emission dimming.

Protective coating recommended for marine environments within 5 km of the sea.

LED 5700K

Availlable version with LED **5700K - CRI>80** with **subcode -6035.**

Luminous flux maintenance Power factor ≥0.92		Wattage W tot	Allowed ambient temperature		
			Ta min	Ta INDOOR max	Ta OUTDOOR max
90%	100.000h (L90B10)	410W	-40°C	40°C	50°C
90%	100.000h (L90B10)	590W	-40°C	35°C	45°C

The table below shows the values for standard versions. For further information (expected life, temperatures) and/or for special versions, please contact our customer service.



ACCESSORIES

acc. 462 protection guard

black	997933-00

Plastic-coated steel rod. For protection against impact.

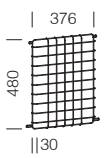

acc. 463 conveyor

RAL 7021	997934-00

To be used for conveying the light beam in a single direction.

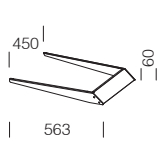

acc. 333 Ø60 pole mounting

RAL 7021	997915-21

Made of aluminium. To be used to apply the fixture on a ø 60 pole.

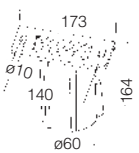

acc. 473 high efficiency light conveyor

RAL 7021	997939-00

Externally coated aluminium with a high-gloss aluminium interior.

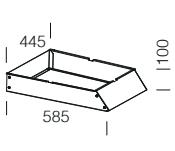

acc. 334 Ø76 pole mounting

RAL 7021	997916-21

Made of aluminium. To be used to apply the fixture on a ø 76 pole.

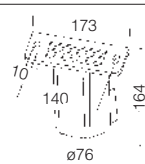



Cromo with acc. 473, high-efficiency light conveyor: it allows the beam to be directed towards the target area, increasing illuminance levels (lux) while preventing stray light from falling outside the designated zone (light spill).

















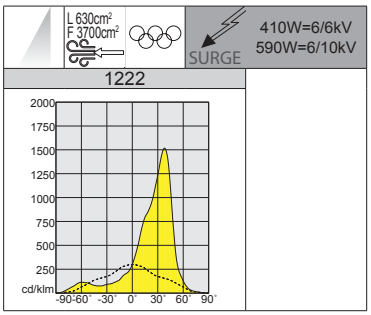



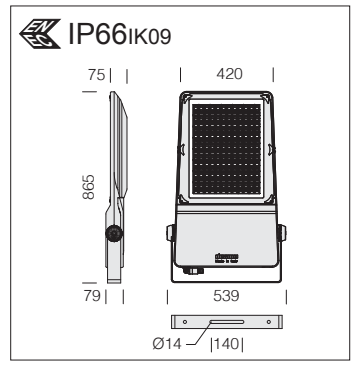

LED: power factor: ≥0,92. Luminous flux maintenance 90%: 100.000h (L90B10).

Upon request version with:
- **CLD D-D (DALI)** wiring with **subcode -0041.**

Upon request: (subcode -6035)	
LED	5700K - CRI>80

1222 Cromo - asymmetric 38°

			CLD		LUMEN OUTPUT (tq= 25 °C)
LED	colour	weight	code	W tot	K - ølm - CRI - degrees
LED	RAL 7021	19.00	411070-00	**410**	4000K - 63316lm - CRI 70 - 38°
			411070-39		3000K - 58884lm - CRI 70 - 38°
			411070-0035		5700K - 63316lm - CRI 70 - 38°
LED	RAL 7021	21.00	411071-00	**590**	4000K - 85696lm - CRI 70 - 38°
			411071-39		3000K - 79698lm - CRI 70 - 38°
			411071-0035		5700K - 85696lm - CRI 70 - 38°

















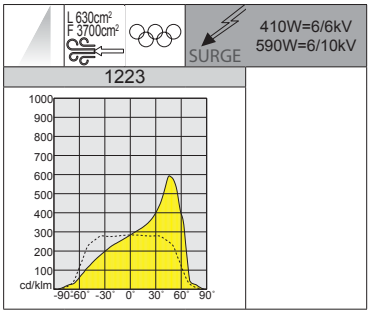



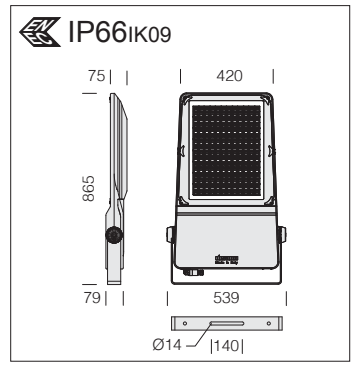

LED: power factor: ≥0,92. Luminous flux maintenance 90%: 100.000h (L90B10).

Upon request version with:
- **CLD D-D (DALI)** wiring with **subcode -0041.**

Upon request: (subcode -6035)	
LED	5700K - CRI>80

1223 Cromo - asymmetric 45°

			CLD		LUMEN OUTPUT (tq= 25 °C)
LED	colour	weight	code	W tot	K - ølm - CRI - degrees
LED	RAL 7021	19.00	411080-00	**410**	4000K - 66378lm - CRI 70 - 45°
			411080-39		3000K - 61731lm - CRI 70 - 45°
			411080-0035		5700K - 66378lm - CRI 70 - 45°
LED	RAL 7021	21.00	411081-00	**590**	4000K - 89840lm - CRI 70 - 45°
			411081-39		3000K - 83551lm - CRI 70 - 45°
			411081-0035		5700K - 89840lm - CRI 70 - 45°

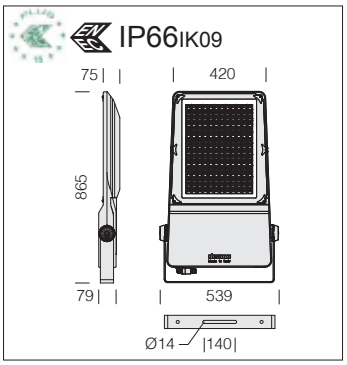

LED: power factor: ≥0,92. Luminous flux maintenance 90%: 100.000h (L90B10).

Upon request version with:
• **CLD D-D (DALI)** wiring with **sub-code -0041.**



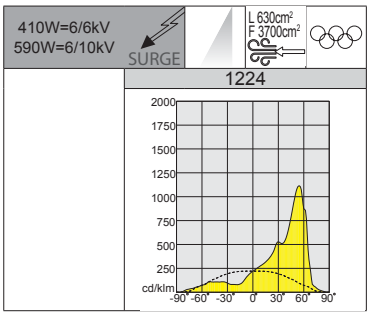

Upon request: (subcode -6035)	
LED	5700K - CRI>80

1224 Cromo - asymmetric 55°

		CLD			LUMEN OUTPUT (tq= 25 °C)
LED	colour	weight	code	W tot	K - ølm - CRI - degrees
LED	RAL 7021	19.00	411000-00	**410**	4000K - 63845lm - CRI 70 - 55°
			411000-39		3000K - 59376lm - CRI 70 - 55°
			411000-0035		5700K - 63845lm - CRI 70 - 55°
LED	RAL 7021	21.00	411001-00	**590**	4000K - 86413lm - CRI 70 - 55°
			411001-39		3000K - 80364lm - CRI 70 - 55°
			411001-0035		5700K - 86413lm - CRI 70 - 55°

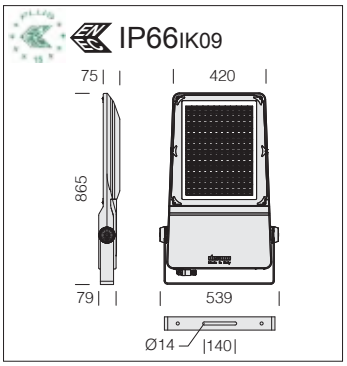

LED: power factor: ≥0,92. Luminous flux maintenance 90%: 100.000h (L90B10).

Upon request version with:
• **CLD D-D (DALI)** wiring with **sub-code -0041.**



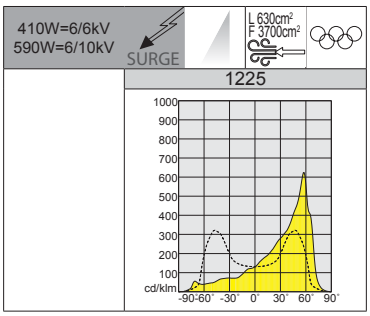

Upon request: (subcode -6035)	
LED	5700K - CRI>80

1225 Cromo - asymmetric 60°

		CLD			LUMEN OUTPUT (tq= 25 °C)
LED	colour	weight	code	W tot	K - ølm - CRI - degrees
LED	RAL 7021	19.00	411010-00	**410**	4000K - 64445lm - CRI 70 - 60°
			411010-39		3000K - 59934lm - CRI 70 - 60°
			411010-0035		5700K - 64445lm - CRI 70 - 60°
LED	RAL 7021	21.00	411011-00	**590**	4000K - 87226lm - CRI 70 - 60°
			411011-39		3000K - 81120lm - CRI 70 - 60°
			411011-0035		5700K - 87226lm - CRI 70 - 60°



RG0 Ethr

max C° min

U.V.

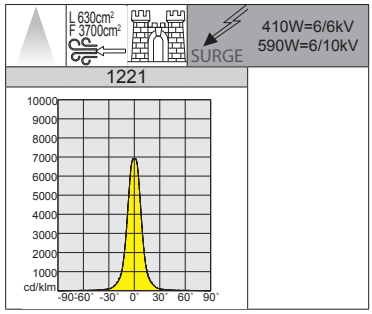



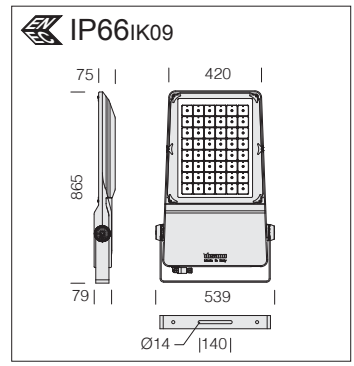

LED: power factor: ≥0,92. Luminous flux maintenance 90%: 100.000h (L90B10).

Upon request version with:
- **CLD D-D (DALI)** wiring with **sub-code -0041.**

Upon request: (subcode -6035)	
LED	5700K - CRI>80

1221 Cromo - symmetric "FS"

		CLD			LUMEN OUTPUT (tq= 25 °C)
LED	colour	weight	code	W tot	K - ølm - CRI - degrees
LED	RAL 7021	19.00	411090-00	**410**	4000K - 70978lm - CRI 70 - 18°
			411090-39		3000K - 66041lm - CRI 70 - 18°
			411090-0035		5700K - 70978lm - CRI 70 - 18°
LED	RAL 7021	21.00	411091-00	**590**	4000K - 96112lm - CRI 70 - 18°
			411091-39		3000K - 89385lm - CRI 70 - 18°
			411091-0035		5700K - 96112lm - CRI 70 - 18°

IP66IK09

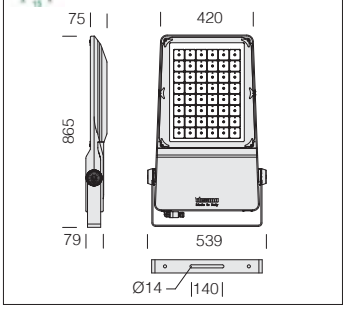

LED: power factor: ≥0,92. Luminous flux maintenance 90%: 100.000h (L90B10).

Upon request version with:
• **CLD D-D (DALI)** wiring with **sub-code -0041.**



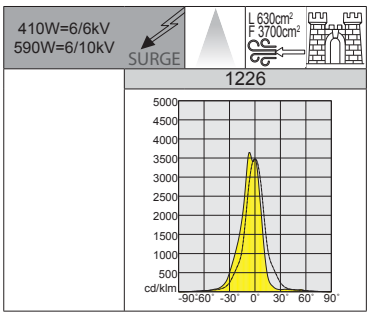

Upon request: (subcode -6035)	
LED	5700K - CRI>80

1226 Cromo - symmetric "MS"

		CLD			LUMEN OUTPUT (tq= 25 °C)
LED	colour	weight	code	W tot	K - ølm - CRI - degrees
LED	RAL 7021	19.00	411020-00	**410**	4000K - 69724lm - CRI 70 - 24°
			411020-39		3000K - 64843lm - CRI 70 - 24°
			411020-0035		5700K - 69724lm - CRI 70 - 24°
LED	RAL 7021	21.00	411021-00	**590**	4000K - 94369lm - CRI 70 - 24°
			411021-39		3000K - 87763lm - CRI 70 - 24°
			411021-0035		5700K - 94369lm - CRI 70 - 24°

IP66IK09

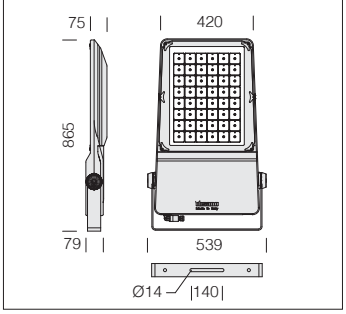

LED: power factor: ≥0,92. Luminous flux maintenance 90%: 100.000h (L90B10).

Upon request version with:
• **CLD D-D (DALI)** wiring with **sub-code -0041.**



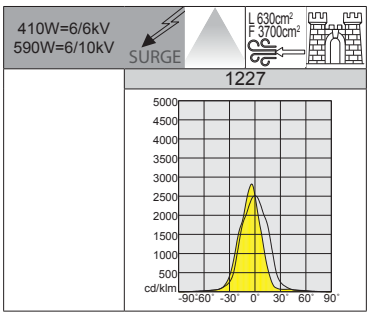

Upon request: (subcode -6035)	
LED	5700K - CRI>80

1227 Cromo - symmetric "M"

		CLD			LUMEN OUTPUT (tq= 25 °C)
LED	colour	weight	code	W tot	K - ølm - CRI - degrees
LED	RAL 7021	19.00	411030-00	**410**	4000K - 69690lm - CRI 70 - 40°
			411030-39		3000K - 64812lm - CRI 70 - 40°
			411030-0035		5700K - 69690lm - CRI 70 - 40°
LED	RAL 7021	21.00	411031-00	**590**	4000K - 94324lm - CRI 70 - 40°
			411031-39		3000K - 87722lm - CRI 70 - 40°
			411031-0035		5700K - 94324lm - CRI 70 - 40°



IP66 IK09

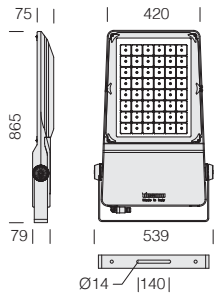

LED: power factor: ≥0,92. Luminous flux maintenance 90%: 100.000h (L90B10).

Upon request version with:
• **CLD D-D (DALI)** wiring with **sub-code -0041.**



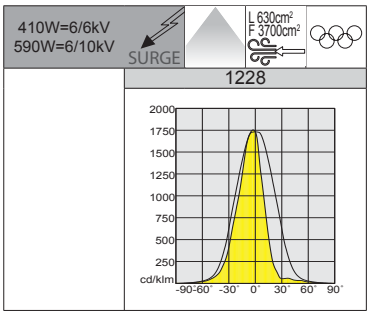

Upon request: (subcode -6035)	
LED	5700K - CRI>80

1228 Cromo - symmetric "W"

		CLD			LUMEN OUTPUT (tq= 25 °C)
LED	colour	weight	code	W tot	K - ølm - CRI - degrees
LED	RAL 7021	19.00	411050-00	**410**	4000K - 69124lm - CRI 70 - 52°
			411050-39		3000K - 64285lm - CRI 70 - 52°
			411050-0035		5700K - 69124lm - CRI 70 - 52°
LED	RAL 7021	21.00	411051-00	**590**	4000K - 93558lm - CRI 70 - 52°
			411051-39		3000K - 87009lm - CRI 70 - 52°
			411051-0035		5700K - 93558lm - CRI 70 - 52°

IP66 IK09

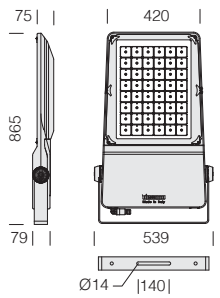

LED: power factor: ≥0,92. Luminous flux maintenance 90%: 100.000h (L90B10).

Upon request version with:
• **CLD D-D (DALI)** wiring with **sub-code -0041.**



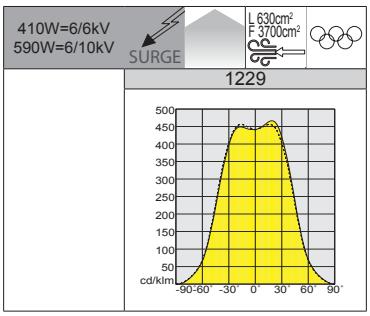

Upon request: (subcode -6035)	
LED	5700K - CRI>80

1229 Cromo - symmetric "XW"

		CLD			LUMEN OUTPUT (tq= 25 °C)
LED	colour	weight	code	W tot	K - ølm - CRI - degrees
LED	RAL 7021	19.00	411060-00	**410**	4000K - 65323lm - CRI 70 - 90°
			411060-39		3000K - 60750lm - CRI 70 - 90°
			411060-0035		5700K - 65323lm - CRI 70 - 90°
LED	RAL 7021	21.00	411061-00	**590**	4000K - 88413lm - CRI 70 - 90°
			411061-39		3000K - 82225lm - CRI 70 - 90°
			411061-0035		5700K - 88413lm - CRI 70 - 90°

GENERAL CHARACTERISTICS

Housing: in die-cast aluminium with cooling fins. Black nylon enclosure for versions with diameters of 370mm and power supply of up to 150W

Diffuser: 4mm thick tempered glass, resistant to thermal shocks and impacts (UNI-EN 12150-1 : 2001).

Coating: the fully automated powder-coating cycle involves a polyester-based, salt-spray corrosion-resistant and UV-stabilised paint.

SURGE Electronic safety device to protect the LED module and the related ballast compliant with EN 61547.
It works in two modes:
- differential mode: surge between power cables and between the phase and neutral.
- common mode: surge between power, L/N and ground cables or between the fixture's body if it is of class II and installed on a metal pole.

On request: protection up to 10KV.

OTHER CHARACTERISTICS



Standard supply: mounting bracket and graduated scale goniometer which allows for accurate pointing. Silicone rubber gasket; external screws and bolts in stainless steel; air recirculation valve and waterproof connector for quick installation with **no need to open the fixture**.



The heat dissipation system was designed and manufactured to allow LED operation at adequate temperatures and guarantee excellent performance/efficiency and long life.

OTHER INFORMATION



The modularity of the optical system, the solutions used for the electronic circuit design, make the Saturno a highly flexible product, capable of guaranteeing huge application advantages in several situations.

LOW FLICKER Product with a very low flicker; uniform light for greater eye protection.



Energy saving: Saturno can save more energy compared to conventional discharge lamps and meet applicable standards. We recommend using LED technology to save energy in environments where lights stay on for a long time.

UPON REQUEST

Possibility of centralized lighting point control or via **external** presence/lighting sensors (see chapter *Lighting management systems and recommendations*).

Protective coating recommended for marine environments within 5 km of the sea.

DIMM DIG Version **CLD D-D (DALI)** wiring with **subcode -0041:** thanks to pre-programmed settings or a software programme, this type of wiring allows accurate light emission dimming.



Luminous flux maintenance Power factor ≥0.95		Wattage (tot.)	Allowed ambient temperature (min.°C ÷ max.°C)
90%	100.000h (L90B10) *(art. 2889-2890)*	150W	Ta = -40°C ÷ +50°C
		200W	Ta = -40°C ÷ +50°C
		250W	Ta = -40°C ÷ +45°C

The table below shows the values for standard versions. For further information (expected life, temperatures) and/or for special versions, please contact our customer service.

ACCESSORIES

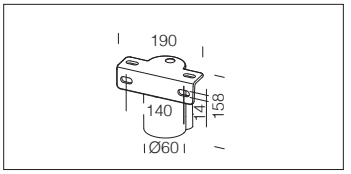

acc. 235 Ø60 pole mounting	
RAL7021	997927-00
Made of aluminium. To be used to apply the fixture on a ø 60 pole.	

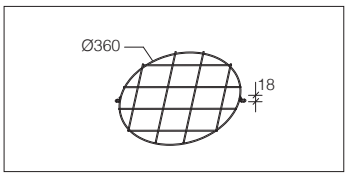

acc. 26 protection guard	
RAL 7021	995698-00
Plastic-coated steel rod protection guard. Screw mounting.	

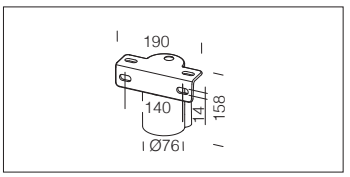

acc. 236 Ø76 pole mounting	
RAL7021	997926-00
Made of aluminium. To be used to apply the fixture on a ø 76 pole.	



Example of pole installation with **acc. 235**

IP66IK08

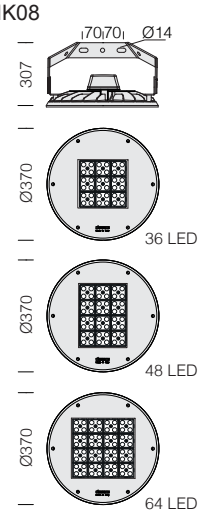



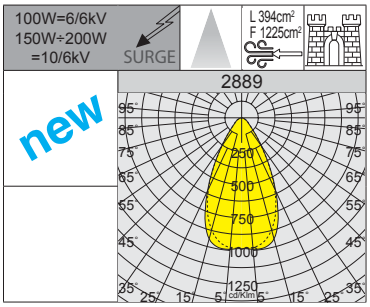

LED: luminous flux maintenance 90%: 100.000h (L90B10).
Power factor ≥0.95.

2889 Saturno Ø370 - narrow beam

		CLD				LUMEN OUTPUT (tq= 25 °C)
LED	colour	weight	Ø	code	W tot	K - ølm - CRI
LED	RAL 7021	7.20	370	330873-00	**150**	4000K - **25020lm** - CRI 70
				330874-00	**200**	4000K - **33530lm** - CRI 70
				330875-00	**250**	4000K - **41230lm** - CRI 70

IP66IK08

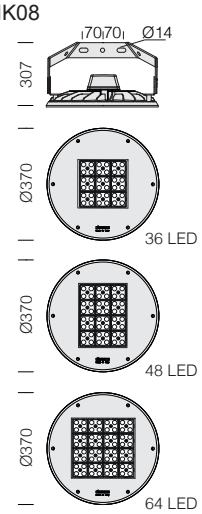



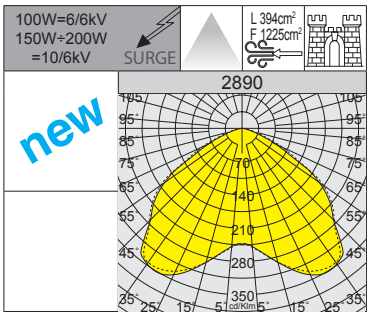

LED: luminous flux maintenance 90%: 100.000h (L90B10).
Power factor ≥0.95.

2890 Saturno Ø370 - wide beam

		CLD				LUMEN OUTPUT (tq= 25 °C)
LED	colour	weight	Ø	code	W tot	K - ølm - CRI
LED	RAL 7021	7.20	370	330887-00	**150**	4000K - **24700lm** - CRI 70
				330888-00	**200**	4000K - **33100lm** - CRI 70
				330889-00	**250**	4000K - **40700lm** - CRI 70



GENERAL CHARACTERISTICS

Housing/Frame: in die-cast aluminium with cooling fins integrated into the cover and designed with a very small surface exposed to wind.

Optics: made of PMMA with high temperature resistance and UV rays.

Diffuser: tempered glass, 4 mm thick, resistant to thermal shocks and impacts (UNI-EN 12150-1: 2001).

Coating: the fully automated powder-coating cycle involves a polyester-based, salt-spray corrosion-resistant and UV-stabilised paint.

Upon request: protective coating recommended for marine environments within 5 km of the sea.

Standard supply: automatic temperature control inside the device with automatic resetting (except for versions with separate gear box).

SURGE Electronic safety device to protect the LED module and the related ballast compliant with EN 61547.
It works in two modes:
- differential mode: surge between power cables and between the phase and neutral.
- common mode: surge between power, L/N and ground cables or between the fixture's body if it is of class II and installed on a metal pole.
On request: protection up to 10KV.

LED: luminous flux maintenance 90%: 100.000h (L90B10).
Power factor ≥0.95.

OTHER CHARACTERISTICS



Complete with mounting bracket and graduated scale goniometer which allows for accurate pointing. The fixture is equipped with anti-condensation valve for air recirculation and waterproof connector for quick installation with **no need to open the fixture.**

UPON REQUEST



Upon request: Astro with adjustable formed bracket.

Possibility of centralized lighting point control or via **external** presence/lighting sensors (see chapter *Lighting management systems and recommendations*).

ACCESSORIES

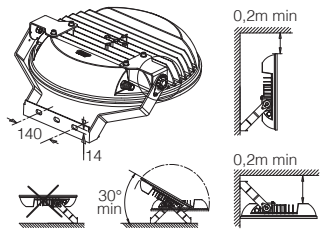

Upon request: adjustable formed bracket, allowing 180° rotation of the floodlight.

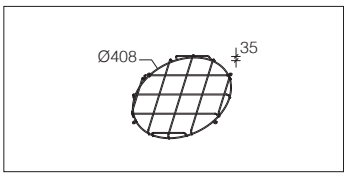

acc. 24 protection guard	
RAL 7021	995773-00

Plastic-coated steel rod protection guard. Screw mounting. For Astro Ø462.

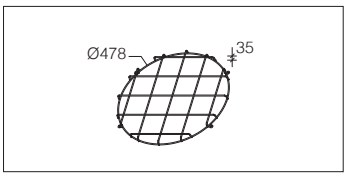

acc. 24 protection guard	
RAL 7021	995771-00

Plastic-coated steel rod protection guard. Screw mounting. For Astro Ø512.

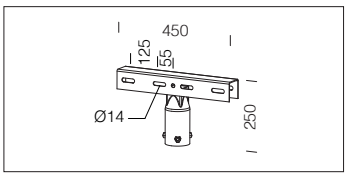

acc. 59 pole bracket	
galvan.	997900-00

Bracket for pole mounting 1 or 2 end-to-end floodlights. For Ø 60/76 mm poles.

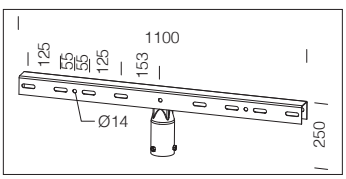

acc. 60 pole bracket	
galvan.	997901-00

Bracket for pole mounting 2 or 4 end-to-end exterior floodlights. For Ø 60/76 mm poles.

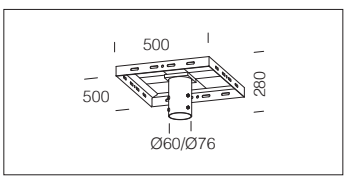

acc. 164 pole bracket	
galvan.	998097-00

Made in galvanized steel. To be used to apply on a pole until 4 fixture Ø 60/76 mm.

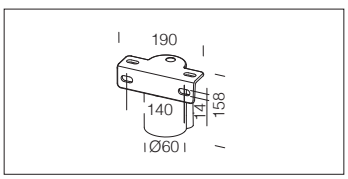

acc. 235 ø60 pole mounting	
RAL 7021	997927-00

Made of aluminium. To be used to apply the fixture on a ø 60 pole.

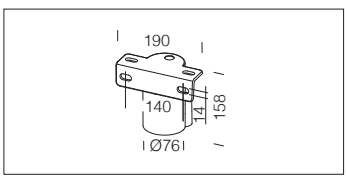

acc. 236 ø76 pole mounting	
RAL 7021	997926-00

Made of aluminium. To be used to apply the fixture on a ø 76 pole.

IP66IK08

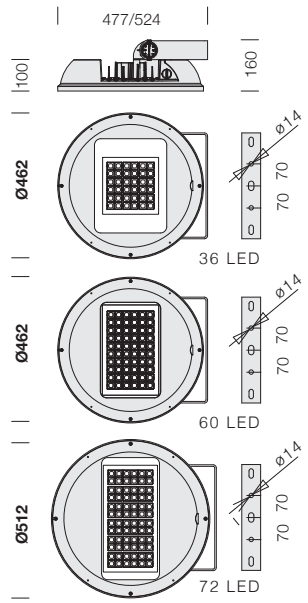



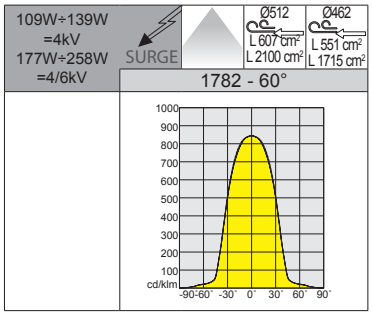

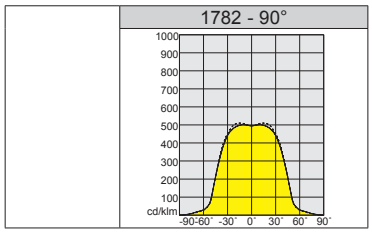

1782 Astro HP - HIGH PERFORMANCE

		CLD				LUMEN OUTPUT (tq= 25 °C)
LED	colour	weight	Ø	code	W tot	K - ølm - CRI - degrees
LED	RAL 7021	9.50	462	320000-00	**109**	4000K - 15131lm - CRI 80 - 60°
		9.60		320001-00	**139**	4000K - 17816lm - CRI 80 - 60°
		10.40		320002-00	**177**	4000K - 23236lm - CRI 80 - 60°
		11.80	512	320003-00	**258**	4000K - 34987lm - CRI 80 - 60°
				320004-00		4000K - 33295lm - CRI 80 - 30°
				320005-00		4000K - 34601lm - CRI 80 - 90°

IP66IK08

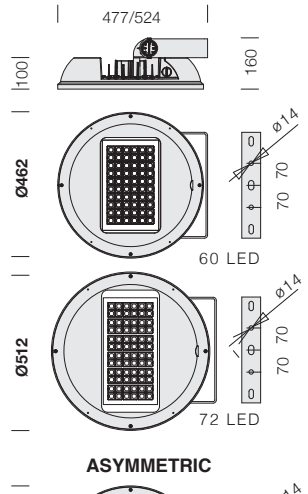



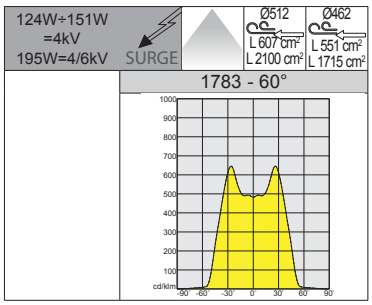

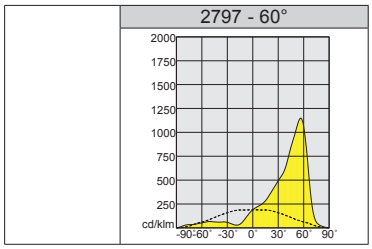

1783 Astro HE - HIGH EFFICIENCY

		CLD				LUMEN OUTPUT (tq= 25 °C)
LED	colour	weight	Ø	code	W tot	K - ølm - CRI - degrees
LED	RAL 7021	10.30	462	320010-00	**124**	4000K - 18135lm - CRI 80 - 60°
				320011-00	**151**	4000K - 22236lm - CRI 80 - 60°
		11.80	512	320012-00	**195**	4000K - 27488lm - CRI 80 - 60°
				320014-00		4000K - 26159lm - CRI 80 - 30°
				320015-00		4000K - 27195lm - CRI 80 - 90°

2797 Astro HE 60°- HIGH EFFICIENCY - asymmetric

		CLD				LUMEN OUTPUT (tq= 25 °C)
LED	colour	weight	Ø	code	W tot	K - ølm - CRI - degrees
LED	RAL 7021	10.70	462	320031-00	**124**	4000K - 17684lm - CRI 70 - 60°
				320032-00	**151**	4000K - 20924lm - CRI 70 - 60°
		11.80	512	320033-00	**195**	4000K - 24553lm - CRI 70 - 60°
		12.20		320034-00	**280**	4000K - 32446lm - CRI 70 - 60°



GENERAL CHARACTERISTICS

Housing: in extruded aluminium with terminal ends in die-cast aluminium.

Reflector: in matt aluminium, high efficiency and anti-glare.

Diffuser: 4 mm thick temperate glass resistant to thermal shock and impacts (UNI EN 12150-1 : 2001).

Coating: the fully automated powder-coating cycle involves a polyester-based, salt-spray corrosion-resistant and UV-stabilised paint.v

Equipment: complete with galvanised and coated bracket. Silicone rubber gasket; external screws and bolts in stainless steel; air recirculation valve. Waterproof connector for quick installation with **no need to open the fixture.**

Wiring: 220-240V 50/60Hz power supply; with IP66 driver applied to the fixture.

LOW FLICKER

Product with a very low flicker; uniform light for greater eye protection.

OTHER CHARACTERISTICS

SURGE

Electronic safety device to protect the LED module and the related ballast compliant with EN 61547.
It works in two modes:
- differential mode: surge between power cables and between the phase and neutral.
- common mode: surge between power, L/N and ground cables or between the fixture's body if it is of class II and installed on a metal pole.

On request: protection up to 10KV.



Structure 2/3 LED modules : in painted steel with bracket for spotlight mounting.

OTHER INFORMATION

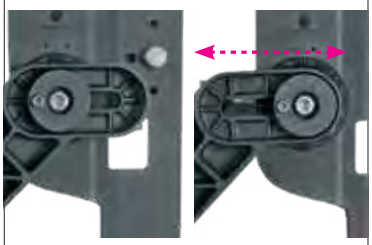

HP version with bracket in diecast aluminium made to move along the horizontal axis to give greater light pointing freedom.



Junction box for terminals in diecast aluminium on the support bracket

UPON REQUEST

Possibility of centralized lighting point control or via **external** presence/lighting sensors (see chapter *Lighting management systems and recommendations*).

Protective coating recommended for marine environments within 5 km of the sea.

DIMM 1-10V

Version **CLD D (1/10V)** wiring with **subcode -12.**

DIMM DIG

Version **CLD D-D (DALI)** wiring with **subcode -0041:** thanks to pre-programmed settings or a software programme, this type of wiring allows accurate light emission dimming.

LED 5700K

Availlable version with LED **5700K** with **subcode -0035.**

Luminous flux maintenance Power factor ≥0.95	Wattage W tot	Allowed ambient temperature		
		Ta min	Ta INDOOR max	Ta OUTDOOR max
90%: 50.000h (L90B10) 70%: 100.000h (L70B50) *(art. 2150 HE)*	278W	-40°C	30°C	40°C
	380W	-40°C	30°C	40°C
	408W	-40°C	30°C	40°C
90%: 50.000h (L90B10) 70%: 100.000h (L70B50) *(art. 2151 HE)*	484W	-40°C	30°C	40°C
	556W	-40°C	30°C	40°C
90%: 50.000h (L90B10) 70%: 100.000h (L70B50) *(art. 2152 HE)*	278W	-40°C	35°C	45°C
	346W	-40°C	35°C	45°C
90%: 50.000h (L90B10) 70%: 100.000h (L70B50) *(art. 2153 HE)*	484W	-40°C	35°C	45°C
	556W	-40°C	35°C	45°C
90%: 50.000h (L90B10) 70%: 100.000h (L70B50) *(art. 2155 HP-2156 HP)*	272W	-40°C	30°C	40°C
	409W	-40°C	30°C	40°C
	544W	-40°C	30°C	40°C
90%: 50.000h (L90B10) 70%: 100.000h (L70B50) *(art. 2157 HP-2158 HP)*	295W	-40°C	35°C	45°C
	409W	-40°C	35°C	45°C
	590W	-40°C	35°C	45°C
90%: 50.000h (L90B10) 70%: 100.000h (L70B50) *(art. 2168 HP-2169 HP)*	816W	-40°C	35°C	45°C
	885W	-40°C	35°C	45°C

The table below shows the values for standard versions. For further information (expected life, temperatures) and/or for special versions, please contact our customer service.



ACCESSORIES RADON

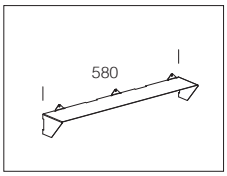

acc. 384 conveyor

4/8/12 COB	995794-00

In aluminium, RAL 7021. To be used for conveying the light beam in a single direction.

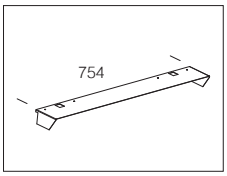

acc. 384 conveyor

6 COB	995795-00

In aluminium, RAL 7021. To be used for conveying the light beam in a single direction.

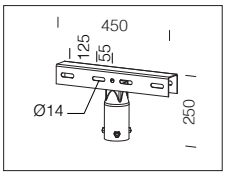

acc. 59
pole bracket

galvan.	997900-00

Bracket for pole mounting 1 or 2 end-to-end floodlights. For Ø 60/76 mm poles.

RG0 Ethr | max C° min | U.V. | LOW FLICKER | 3000K | 4000K

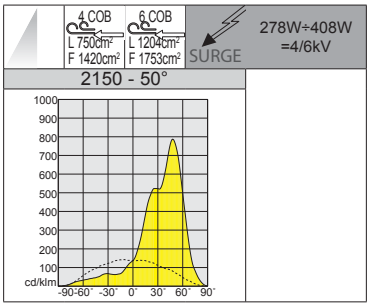

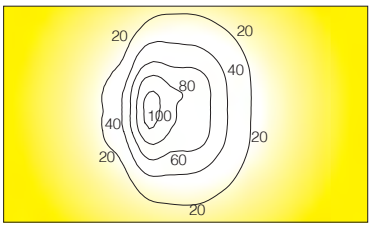



IP66 IK08

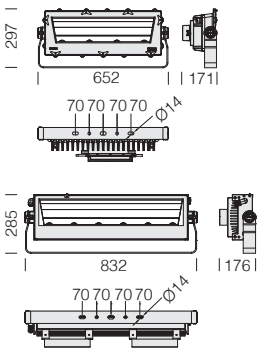

LED: power factor ≥0,95. Luminous flux maintenance:	
90%	50.000h (L90B10)
70%	100.000h (L70B50)

Upon request: (subcode -0035)	
LED	5700K - CRI 80

2150 Radon HE - HIGH EFFICIENCY - 1 LED MODULE - asymmetric

		CLD				LUMEN OUTPUT (tq= 25 °C)
LED	colour	weight	L	code	W tot	K - ølm - CRI - degrees
COB	RAL 7021	11.50	652	413300-00	**278**	4000K - 43092lm - CRI 80 - 50°
				413300-39		3000K - 40075lm - CRI 80 - 50°
COB	RAL 7021	16.30	832	413301-00	**380**	4000K - 57992lm - CRI 80 - 50°
				413301-39		3000K - 53932lm - CRI 80 - 50°
COB	RAL 7021	16.40	832	413302-00	**408**	4000K - 63751lm - CRI 80 - 50°
				413302-39		3000K - 59288lm - CRI 80 - 50°

RG0 Ethr | max C° min | U.V. | LOW FLICKER | 3000K | 4000K

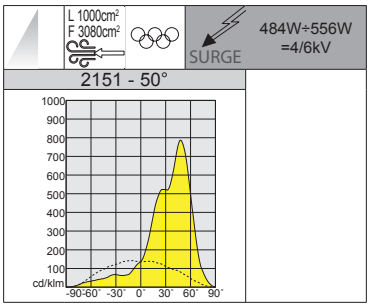

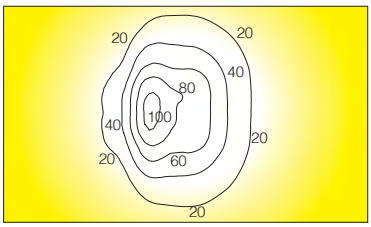



IP66 IK08

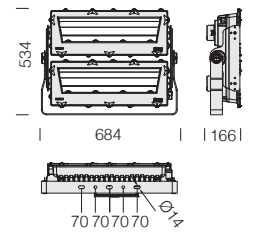

LED: power factor ≥0,95. Luminous flux maintenance:	
90%	50.000h (L90B10)
70%	100.000h (L70B50)

Upon request: (subcode -0035)	
LED	5700K - CRI 80

2151 Radon HE - HIGH EFFICIENCY - 2 LED MODULES - asymmetric

		CLD			LUMEN OUTPUT (tq= 25 °C)
LED	colour	weight	code	W tot	K - ølm - CRI - degrees
COB	RAL 7021	25.20	413310-00	**484**	4000K - 74689lm - CRI 80 - 50°
			413310-39		3000K - 69461lm - CRI 80 - 50°
COB	RAL 7021	25.20	413311-00	**556**	4000K - 86625lm - CRI 80 - 50°
			413311-39		3000K - 80561lm - CRI 80 - 50°

IP66IK08

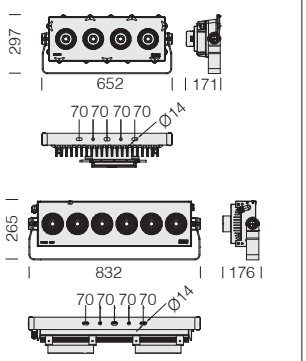

LED: power factor ≥0,95. Luminous flux maintenance:	
90%	50.000h (L90B10)
70%	100.000h (L70B50)

Upon request: (subcode -0035)	
LED	5700K - CRI 80



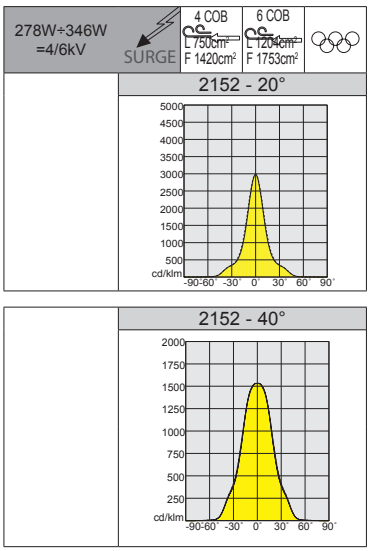

RGO Ethr · max C° min · U.V. · LOW FLICKER · 3000K · 4000K

2152 Radon HE - HIGH EFFICIENCY - 1 LED MODULE - symmetric

		CLD				LUMEN OUTPUT (tq= 25 °C)
LED	colour	weight	L	code	W tot	K - ølm - CRI - degrees
COB	RAL 7021	9.40	652	413320-00	278	4000K - 45843lm - CRI 80 - 20°
				413320-39		3000K - 42634lm - CRI 80 - 20°
				413321-00		4000K - 45967lm - CRI 80 - 40°
				413321-39		3000K - 42750lm - CRI 80 - 40°
				413322-00		4000K - 45717lm - CRI 80 - 60°
				413322-39		3000K - 42517lm - CRI 80 - 60°
COB	RAL 7021	16.00	832	413323-00	346	4000K - 56904lm - CRI 80 - 20°
				413323-39		3000K - 52920lm - CRI 80 - 20°
				413324-00		4000K - 57019lm - CRI 80 - 40°
				413324-39		3000K - 53028lm - CRI 80 - 40°
				413325-00		4000K - 56767lm - CRI 80 - 60°
				413325-39		3000K - 52794lm - CRI 80 - 60°

IP66IK08

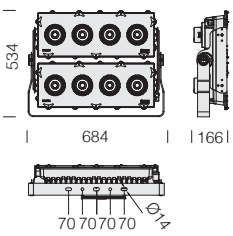

LED: power factor ≥0,95. Luminous flux maintenance:	
90%	50.000h (L90B10)
70%	100.000h (L70B50)

Upon request: (subcode -0035)	
LED	5700K - CRI 80



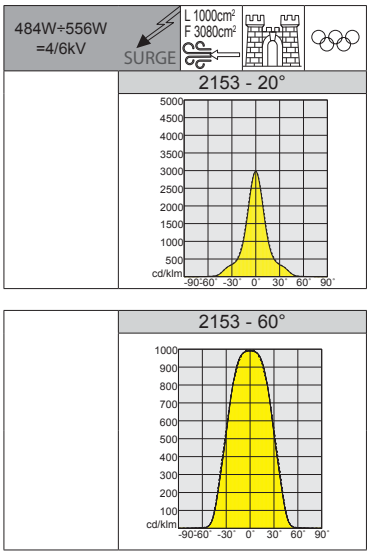

RGO Ethr · max C° min · U.V. · LOW FLICKER · 3000K · 4000K

2153 Radon HE - HIGH EFFICIENCY - 2 LED MODULES - symmetric

		CLD			LUMEN OUTPUT (tq= 25 °C)
LED	colour	weight	code	W tot	K - ølm - CRI - degrees
COB	RAL 7021	19.40	413330-00	484	4000K - 77481lm - CRI 80 - 20°
			413330-39		3000K - 72057lm - CRI 80 - 20°
			413331-00		4000K - 77712lm - CRI 80 - 40°
			413331-39		3000K - 72272lm - CRI 80 - 40°
			413332-00		4000K - 77124lm - CRI 80 - 60°
			413332-39		3000K - 71724lm - CRI 80 - 60°
COB	RAL 7021	20.00	413333-00	556	4000K - 89912lm - CRI 80 - 20°
			413333-39		3000K - 83618lm - CRI 80 - 20°
			413334-00		4000K - 90132lm - CRI 80 - 40°
			413334-39		3000K - 83823lm - CRI 80 - 40°
			413335-00		4000K - 89544lm - CRI 80 - 60°
			413335-39		3000K - 83276lm - CRI 80 - 60°

RG0 Ethr | max C° min | U.V. | LOW FLICKER | 3000K | 4000K

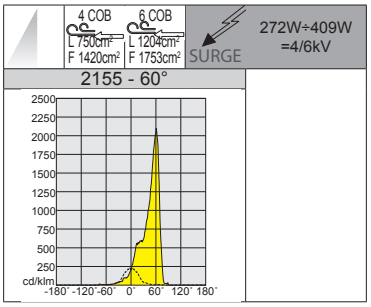

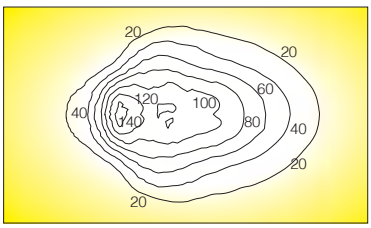



IP66 IK08

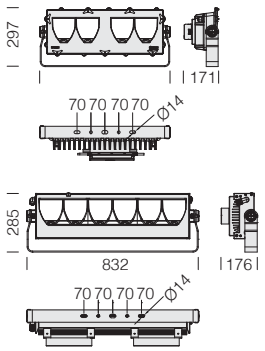

LED: power factor ≥0,95. Luminous flux maintenance:	
90%	50.000h (L90B10)
70%	100.000h (L70B50)

Upon request: (subcode -0035)	
LED	5700K - CRI 80

2155 Radon HP - HIGH PERFORMANCE - 1 LED MODULE - asymmetric

		CLD				LUMEN OUTPUT (tq= 25 °C)
LED	colour	weight	L	code	W tot	K - ølm - CRI - degrees
COB	RAL 7021	11.70	652	413390-00	**272**	4000K - 43344lm - CRI 80 - 60°
				413390-39		3000K - 40310lm - CRI 80 - 60°
COB	RAL 7021	16.10	832	413391-00	**409**	4000K - 67467lm - CRI 80 - 60°
				413391-39		3000K - 62744lm - CRI 80 - 60°

RG0 Ethr | max C° min | U.V. | LOW FLICKER | 3000K | 4000K

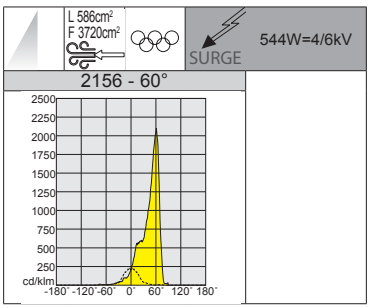

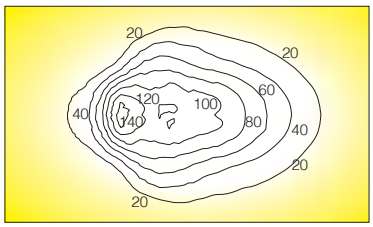

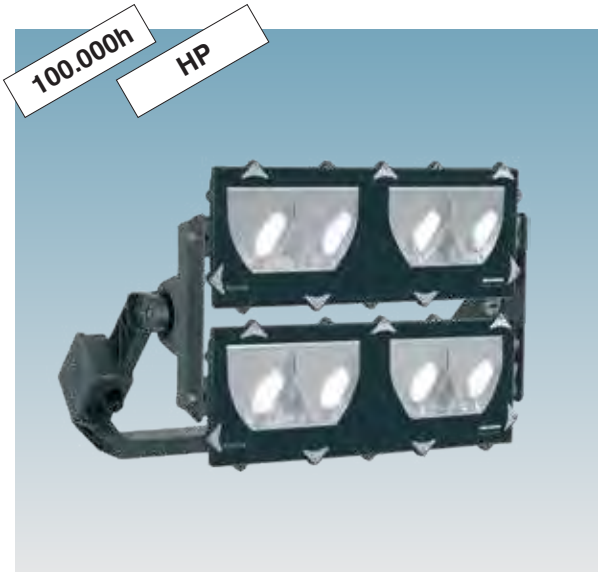

IP66 IK08

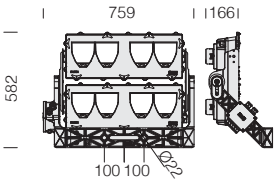

LED: power factor ≥0,95. Luminous flux maintenance:	
90%	50.000h (L90B10)
70%	100.000h (L70B50)

Upon request: (subcode -0035)	
LED	5700K - CRI 80

2156 Radon HP - HIGH PERFORMANCE - 2 LED MODULES - asymmetric

		CLD			LUMEN OUTPUT (tq= 25 °C)
LED	colour	weight	code	W tot	K - ølm - CRI - degrees
COB	RAL 7021	24.90	413360-00	**544**	4000K - 86688lm - CRI 80 - 60°
			413360-39		3000K - 80620lm - CRI 80 - 60°

IP66IK08

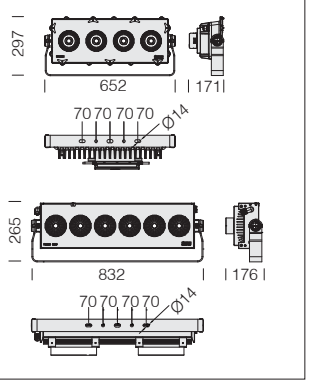

LED: power factor ≥0,95. Luminous flux maintenance:	
90%	50.000h (L90B10)
70%	100.000h (L70B50)

Upon request: (subcode -0035)	
LED	5700K - CRI 80



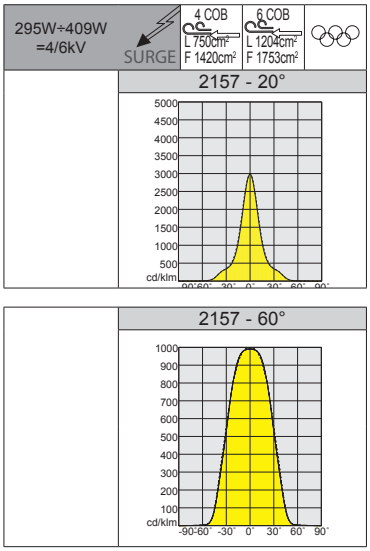

2157 Radon HP - HIGH PERFORMANCE - 1 LED MODULE - symmetric

		CLD				LUMEN OUTPUT (tq= 25 °C)
LED	colour	weight	L	code	W tot	K - ølm - CRI - degrees
COB	RAL 7021	9.30	652	413370-00	295	4000K - 49529lm - CRI 80 - 20°
				413370-39		3000K - 46061lm - CRI 80 - 20°
				413371-00		4000K - 49647lm - CRI 80 - 40°
				413371-39		3000K - 46172lm - CRI 80 - 40°
				413372-00		4000K - 49403lm - CRI 80 - 60°
				413372-39		3000K - 45945lm - CRI 80 - 60°
COB	RAL 7021	16.20	832	413373-00	409	4000K - 69836lm - CRI 80 - 20°
				413373-39		3000K - 64947lm - CRI 80 - 20°
				413374-00		4000K - 69952lm - CRI 80 - 40°
				413374-39		3000K - 65056lm - CRI 80 - 40°
				413375-00		4000K - 69658lm - CRI 80 - 60°
				413375-39		3000K - 64782lm - CRI 80 - 60°

IP66IK08

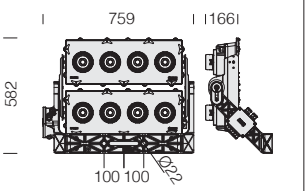

LED: power factor ≥0,95. Luminous flux maintenance:	
90%	50.000h (L90B10)
70%	100.000h (L70B50)

Upon request: (subcode -0035)	
LED	5700K - CRI 80



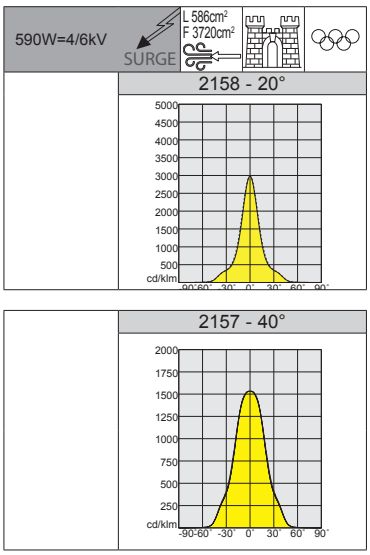

2158 Radon HP - HIGH PERFORMANCE - 2 LED MODULES - symmetric

		CLD			LUMEN OUTPUT (tq= 25 °C)
LED	colour	weight	code	W tot	K - ølm - CRI - degrees
COB	RAL 7021	20.00	413480-00	590	4000K - 99274lm - CRI 80 - 20°
			413480-39		3000K - 92325lm - CRI 80 - 20°
			413481-00		4000K - 99295lm - CRI 80 - 40°
			413481-39		3000K - 92344lm - CRI 80 - 40°
			413482-00		4000K - 98721lm - CRI 80 - 60°
			413482-39		3000K - 91811lm - CRI 80 - 60°



Design examples with Radon HP 3 LED modules

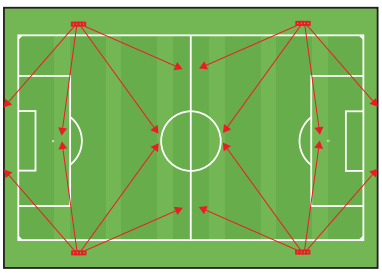

Field dimensions:
- Length: 100.00 m
- Width: 60.00 m
- Pole height: 18m

Quantity	Product	Φ [lm]	P [W]
16	art. 2168 - Radon HP - **asymmetric** 60° - 12 LED COB	130089	816.0
			Tot.: 13.0

Luminance:

Type	E_m [lx]	E_{min} [lx]	E_{max} [lx]	U0	E_{min} / E_{max}	camera
horizontal	256	142	472	0.60	0.30	-

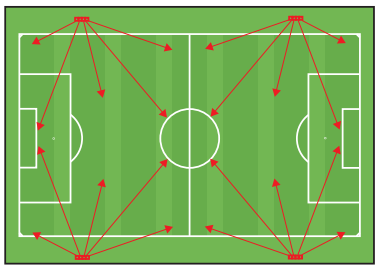

Field dimensions:
- Length: 105.00 m
- Width: 65.00 m
- Pole height: 20m

Quantity	Product	Φ [lm]	P [W]
12	art. 2169 - Radon HP - **symmetric** 20° - 12 LED COB	148982	885
4	art. 2169 - Radon HP - **symmetric** 40° - 12 LED COB	148985	885
4	art. 2169 - Radon HP - **symmetric** 60° - 12 LED COB	148077	885
			Tot.: 17.700

Luminance:

Type	E_m [lx]	E_{min} [lx]	E_{max} [lx]	U0	E_{min} / E_{max}	camera
horizontal	246	175	332	0.71	0.53	-

IP66IK08

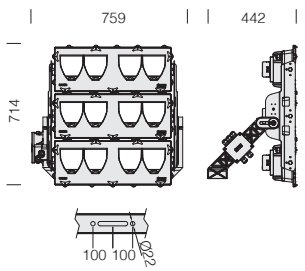

LED: power factor ≥0,95. Luminous flux maintenance:	
90%	50.000h (L90B10)
70%	100.000h (L70B50)



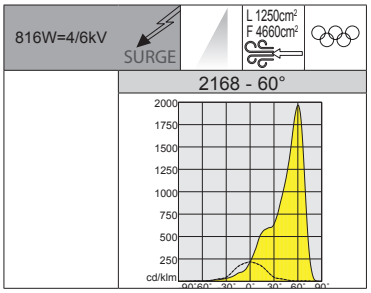

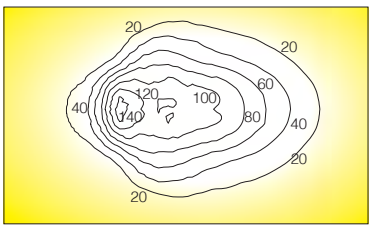

2168 Radon HP - HIGH PERFORMANCE - 3 LED MODULES - asymmetric

		CLD			LUMEN OUTPUT (tq= 25 °C)
LED	colour	weight	code	W tot	K - ølm - CRI - degrees
COB	RAL 7021	36.20	413470-00	816	4000K - 130089lm - CRI 80 - 60°
			413470-39		3000K - 120982lm - CRI 80 - 60°
			413470-0035		5700K - 130089lm - CRI 80 - 60°

IP66IK08

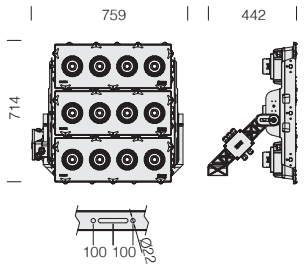

LED: power factor ≥0,95. Luminous flux maintenance:	
90%	50.000h (L90B10)
70%	100.000h (L70B50)



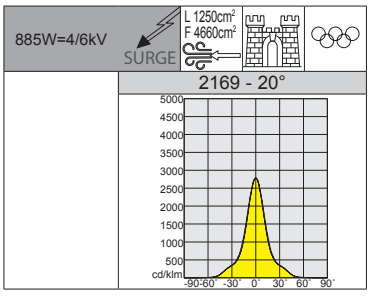

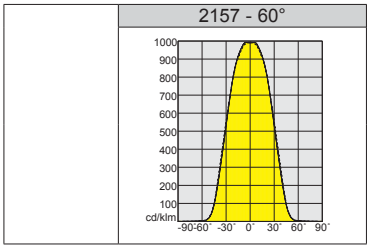

2169 Radon HP - HIGH PERFORMANCE - 3 LED MODULES - symmetric

		CLD			LUMEN OUTPUT (tq= 25 °C)
LED	colour	weight	code	W tot	K - ølm - CRI - degrees
COB	RAL 7021	29.10	413490-00	885	4000K - 148982lm - CRI 80 - 20°
			413490-39		3000K - 138554lm - CRI 80 - 20°
			413490-0035		5700K - 148982lm - CRI 80 - 20°
			413491-00		4000K - 148985lm - CRI 80 - 40°
			413491-39		3000K - 138556lm - CRI 80 - 40°
			413491-0035		5700K - 148985lm - CRI 80 - 40°
			413492-00		4000K - 148077lm - CRI 80 - 60°
			413492-39		3000K - 137712lm - CRI 80 - 60°
			413492-0035		5700K - 148077lm - CRI 80 - 60°

RG0 Ethr
max C° min
U.V.
LOW FLICKER
3000K
4000K
5700K





ACCESSORIES FOR FORUM 1/2/3 MODULES WITH GLASS

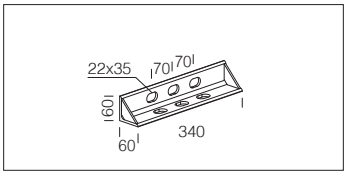

acc. 345 wall bracket

RAL 7021	995772-00

To be used to install Forum 1 LED module directly onto wall surfaces.

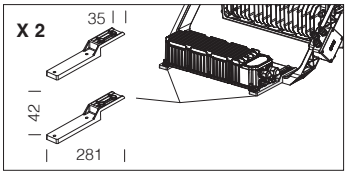

acc. 198 driver support brackets

RAL 7021	995789-00

In steel. To be used for installing the Type 6-7 driver directly on the bracket in 2/3-module versions.

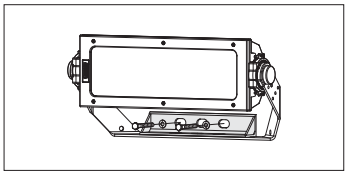

To install Forum 1 LED module to the wall, use acc. 345 and fasten the screws directly to the bracket supplied with the lamp.

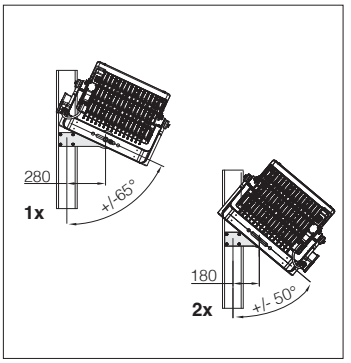

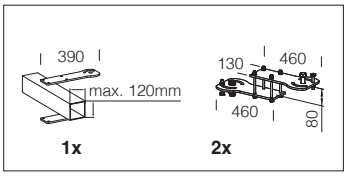

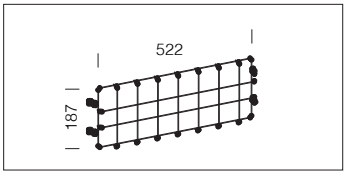

acc. 25 protection guard

black	997930-00

Plastic-coated steel rod. For protection against impact. For Forum art. 2176-2179-2180-2181-2182-2183-2184-2185-HE.

acc. 484 aiming bracket

1X	995777-00
2X	995798-00

Adjustable steel bracket for aiming the light beam of Forum 2/3-modules during installation.

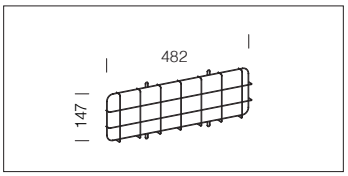

acc. 26 protection guard

black	997931-00

Plastic-coated steel rod. For protection against impact. For Forum art. 2186-2187.

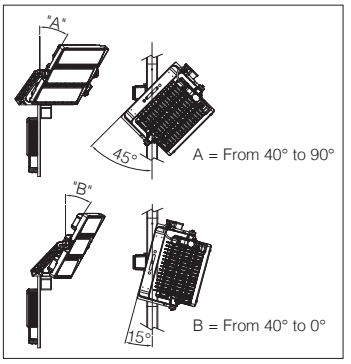

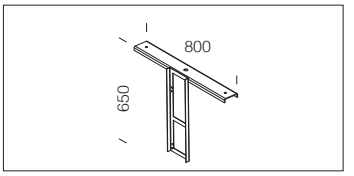

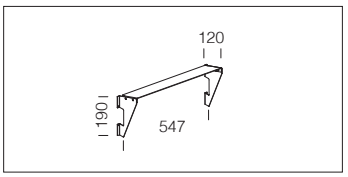

acc. 482 1 module conveyor

RAL 7021	995788-00

In aluminium. To be used for conveying the light beam in a single direction.

acc. 488 driver vertical support

steel	995797-00

Steel driver support bracket designed for the vertical installation of Forum 2/3-module type 6-7 drivers.

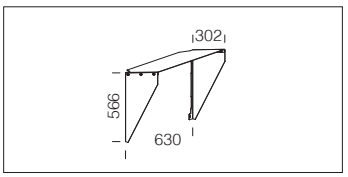

acc. 482 2 modules conveyor

RAL 7021	995785-00

In aluminium. To be used for conveying the light beam in a single direction.

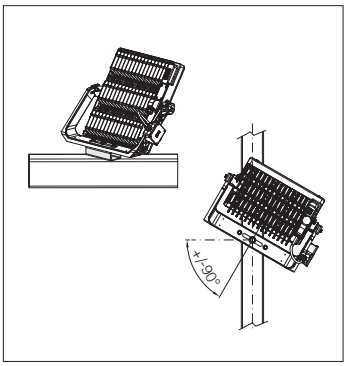

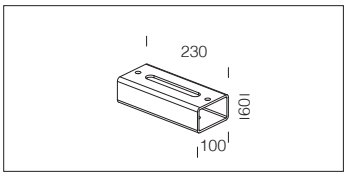

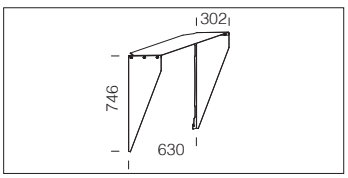

acc. 482 3 modules conveyor

RAL 7021	995786-00

In aluminium. To be used for conveying the light beam in a single direction.

acc. 490 bracket spacer

steel	995800-00

Steel swivel spacer that mounts directly to the Forum 2/3-module bracket. Used to create distance between the spotlight and the installation surface, allowing for easier adjustment and precise pointing.

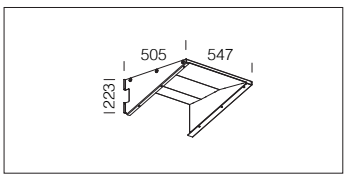



Forum 1-module with acc. 489, high-efficiency light conveyor: it allows the beam to be directed towards the target area, increasing illuminance levels (lux) while preventing stray light from falling outside the designated zone (light spill). Ideal for 1-module versions with a symmetric beam distribution, delivering particularly high performance with MS, M and W optics.

acc. 489 1-module high efficiency light conveyor

RAL 7021	997903-00

Externally coated aluminium with a high-gloss aluminium interior

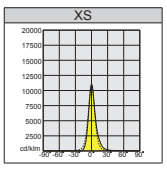

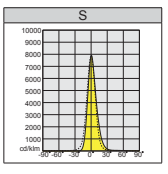

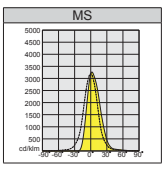

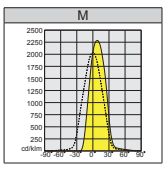

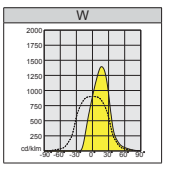

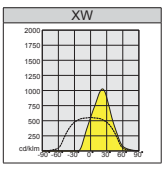

GENERAL CHARACTERISTICS

Housing/Frame: in die-cast aluminium with cooling fins.

Optics: high-performance, extra-clear polycarbonate secondary lenses.

Diffuser: extra-clear, tempered glass, 4 mm thick, resistant to thermal shock and impacts (UNI-EN 12150-1 : 2001).

Coating: the fully automated powder-coating cycle involves a polyester-based, salt-spray corrosion-resistant and UV-stabilised paint.

Standard Supply: complete with galvanised and coated bracket. Single LED module version, equipped with waterproof connector for quick installation. With dedicated electronic device to protect the LED module.

SURGE Electronic safety device to protect the LED module and the related ballast compliant with EN 61547.
It works in two modes:
- differential mode: surge between power cables and between the phase and neutral.
- common mode: surge between power, L/N and ground cables or between the fixture's body if it is installed on a metal pole.

Products compliant with ball impact resistance test standard DIN 18032-3: 2018

LOW FLICKER Product with a very low flicker; uniform light for greater eye protection.

OTHER CHARACTERISTICS

The family of Forum floodlights includes versions with narrow, symmetric and asymmetric beam optics with different highly efficient LED sources. A truly complete range of products offering the best performance to meet all outdoor lighting needs for:
- Buildings and façades
- Industrial zones, harbour areas, train stations and loading/unloading bays
- Public or private infrastructure, airports, metro stations, car parks and transit zones
- Stadiums or indoor and outdoor multi-sport facilities (tennis court, basketball court, swimming pool, velodrome, hockey rink, volleyball court, etc...).

Registered Design DM/100271 The International Bureau of the World Intellectual Property Organization (WIPO) hereby certifies that the particulars given below correspond to the recording made in the International Register of Industrial Designs.

OTHER INFORMATION



Wiring (1 LED module) : 220-240V 50/60Hz power supply; with IP66 driver applied to the fixture.

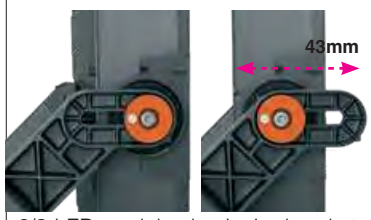

2/3 LED modules luminaire bracket in die-cast aluminium made to move 43 mm along the horizontal axis to give greater light pointing freedom.

UPON REQUEST

The fixture can be equipped with several light dimmers:
- 1-10V (dimmable from 20% to 100%) or DALI dimmable driver
- power line carrier (PLC) remote control
- wireless control system

Protective coating recommended for marine environments within 5 km of the sea.

Stand for spotlights' pointer system.
Available with set for floodlight aiming



Structure 2/3 LED modules: available **on request** in a painted steel version with built-in floodlight support bracket housing. This version allows the floodlight to be tilted less, reducing the frontal surface area exposed to wind (a key factor in the structural assessment of existing lighting towers) while also limiting light spill.



Forum 3.0 symmetric and FS



Forum 3.0 asymmetric

2 MODULES AND FS:
L=810cm² - F=2120cm²

3 MODULES:
L=1070cm² - F=2720cm²

2 MODULES :
L=760cm² - F=860cm²

3 MODULES :
L=1110cm² - F=1050cm²

Luminous flux maintenance Power factor ≥0.92		Wattage (tot.)	Allowed ambient temperature (min.°C ÷ max.°C)
Forum 1 HE *(art. 2177-2188-2189)*			
90%	100.000h (L90B10)	370W	Ta = -30°C ÷ +40°C

Luminous flux maintenance Power factor ≥0.92		Wattage (tot.)	Allowed ambient temperature (min.°C ÷ max.°C)
Forum 2 HE *(art. 2198-2199-2200)*			
90%	100.000h (L90B10)	740W	Ta = -30°C ÷ +40°C

Luminous flux maintenance Power factor ≥0.92		Wattage (tot.)	Allowed ambient temperature (min.°C ÷ max.°C)
Forum 1 *(art. 2176-2179-2180-2181-2182-2183-2186-2187)*			
70%	190.000h (L70B20)@450mA	256W	Ta = -40°C ÷ +45°C
70%	160.000h (L70B20)@700mA	397W	Ta = -40°C ÷ +45°C
70%	145.000h (L70B20)@780mA	442W	Ta = -40°C ÷ +40°C
90%	120.000h (L90B10)@450mA	256W	Ta = -40°C ÷ +45°C
90%	100.000h (L90B10)@700mA	397W	Ta = -40°C ÷ +45°C
90%	90.000h (L90B10)@780mA	442W	Ta = -40°C ÷ +40°C
Forum 1 *(2184-2185)*			
70%	190.000h (L70B20)@600mA	256W	Ta = -40°C ÷ +45°C
70%	160.000h (L70B20)@900mA	397W	Ta = -40°C ÷ +45°C
70%	145.000h (L70B20)@1000mA	442W	Ta = -40°C ÷ +40°C
90%	120.000h (L90B10)@600mA	256W	Ta = -40°C ÷ +45°C
90%	100.000h (L90B10)@900mA	397W	Ta = -40°C ÷ +45°C
90%	90.000h (L90B10)@1000mA	442W	Ta = -40°C ÷ +40°C

Luminous flux maintenance Power factor ≥0.92		Wattage W	Allowed ambient temperature		
			Ta min	Ta INDOOR max	Ta OUTDOOR max
Forum 2 *(art. 2190-2191-2192-2193-2194-2195-2196-2197-2201-2205)*					
90%	100.000h (L90B10) @900mA	975W	-40°C	35°C	45°C
90%	100.000h (L90B10) @1200mA	1000W	-40°C	35°C	45°C

Luminous flux maintenance Power factor ≥0.92		Wattage W	Allowed ambient temperature		
			Ta min	Ta INDOOR max	Ta OUTDOOR max
Forum 3 *(art. 3192-3193-3194-3195-3196-3198-3219-3230-3231-3232)*					
90%	100.000h (L90B10) @900mA	1465W	-40°C	35°C	45°C
90%	100.000h (L90B10) @1200mA	1500W	-40°C	35°C	45°C

The table below shows the values for standard versions. For further information (expected life, temperatures) and/or for special versions, please contact our customer service.



Infrastructure ... loading areas, stations and airports

Train stations, airports and large transit areas are regarded as “landmarks”, i.e. well defined signs of a city’s ambition and desire for renovation. This is why the design of major infrastructure is being entrusted to world-famed architects. Lighting should meet functional requirements and also enhance the challenging solutions chosen by the designers.

Lighting becomes an integral part of these public works, turning into structural elements giving them extraordinary visibility during the evenings. This new approach also applies to small train stations and roads, where proper lighting can increase safety, efficiency and energy savings and improve aesthetics.

Energy saving: the comparison shows how Forum HE can save more energy compared to conventional discharge lamps and meet applicable standards. We recommend using LED technology to save energy in environments where lights stay on for a long time.

Fixture	Kelvin - CRI	Dimensions (m)	H	LUX	Qtx	P tot W	Energy saving
Forum HE	4000K - CRI 70	92,2x66,7	25	≥40	16	5920	**42%**
SAP 600W	2000K - CRI 20	92,2x66,7	25	≥40	16	10256	
Forum HE	4000K - CRI 70	92,2x66,7	25	≥40	16	5920	**65%**
SAP 1000W	2000K - CRI 20	92,2x66,7	25	≥40	16	16800	

RGO Ethr

U.V.

max C° min

0° 180°

LOW FLICKER

3000K

4000K

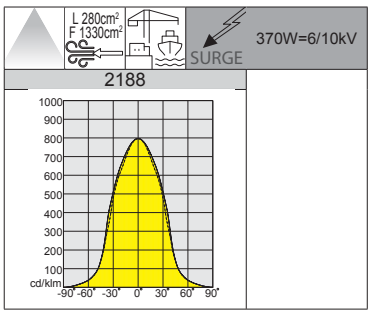

The ideal version for large spaces (squares, stations, airports, etc.)



IP66 IK08

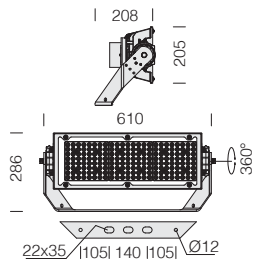

LED: power factor ≥0.92.
Luminous flux maintenance 90%: 100.000h (L90B10).

Wiring (1 LED module) : 220-240V 50/60Hz power supply; with IP66 driver applied to the fixture.

2188 Forum HE with glass - HIGH EFFICIENCY - 1 MODULE - symmetric

		CLD			LUMEN OUTPUT (tq= 25 °C)
LED	colour	weight	code	W tot	K - ølm - CRI
LED	RAL 7021	13.20	412690-00	**370**	4000K - 62480lm - CRI 70
			412690-39		3000K - 59356lm - CRI 70

IP66IK08

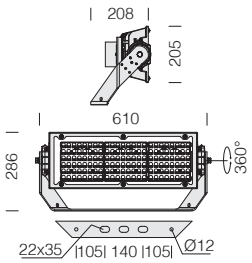

LED: power factor ≥0.92. Luminous flux maintenance 90%: 100.000h (L90B10).

Wiring (1 LED module) : 220-240V 50/60Hz power supply; with IP66 driver applied to the fixture.

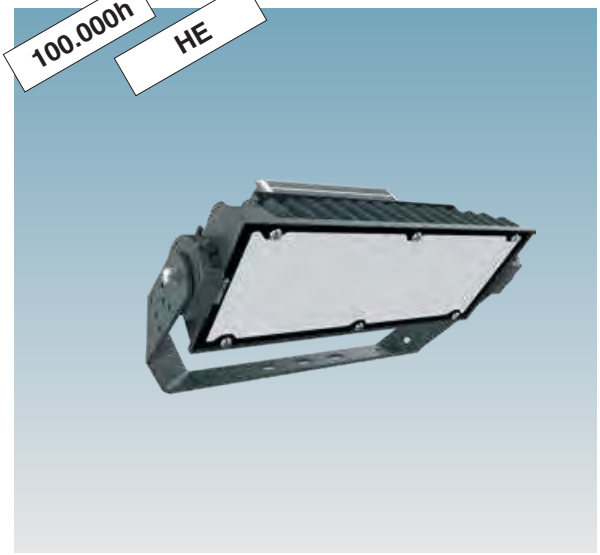

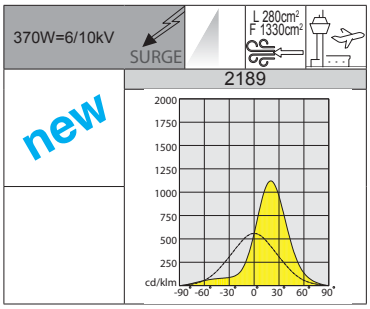

The ideal version for large spaces (squares, stations, airports, etc.)

2189 Forum HE with glass - HIGH EFFICIENCY - 1 MODULE - asymmetric

		CLD			LUMEN OUTPUT (tq= 25 °C)
LED	colour	weight	code	W tot	K - ølm - CRI
LED	RAL 7021	13.20	412695-00	**370**	4000K - **59128lm** - CRI 70
			412695-39		3000K - **56171lm** - CRI 70

IP66IK08

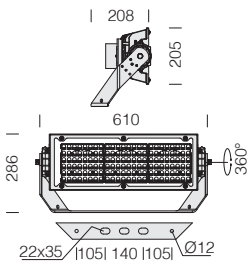

LED: power factor ≥0.92. Luminous flux maintenance 90%: 100.000h (L90B10).

Wiring (1 LED module) : 220-240V 50/60Hz power supply; with IP66 driver applied to the fixture.



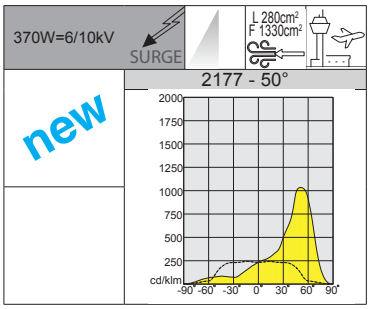

The ideal version for large spaces (squares, stations, airports, etc.)

2177 Forum HE with glass - HIGH EFFICIENCY - 1 MODULE - 50° asymmetric

		CLD			LUMEN OUTPUT (tq= 25 °C)
LED	colour	weight	code	W tot	K - ølm 700mA - CRI
LED	RAL 7021	13.20	412698-00	**370**	4000K - **56653lm** - CRI 70
			412698-39		3000K - **53820lm** - CRI 70

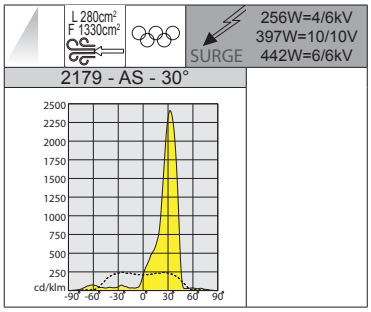



IP66IK08

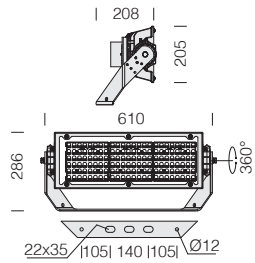

Upon request available version with:		
LED	4000K - CRI 80	450/700/780mA
LED	4000K - **CRI 90**	450/700/780mA
LED	5700K - CRI 70	450/700/780mA
LED	5700K - CRI 80	450/700/780mA
LED	5700K - **CRI 90**	450/700/780mA

LED: power factor ≥0,92. Luminous flux maintenance:		
70%	190.000h (L70B20)	450mA
70%	160.000h (L70B20)	700mA
70%	145.000h (L70B20)	780mA
90%	120.000h (L90B10)	450mA
90%	100.000h (L90B10)	700mA
90%	90.000h (L90B10)	780mA

2179 Forum with glass - 1 MODULE - asymmetric 30° - "AS"

		CLD			LUMEN OUTPUT (tq= 25 °C)
LED	colour	weight	code	W tot	K - ølm 450mA - CRI
LED	RAL 7021	13.20	412658-00	**256**	4000K - 37242lm - CRI 70
					K - ølm 700mA - CRI
LED	RAL 7021	13.20	412656-00	**397**	4000K - 53760lm - CRI 70
					K - ølm 780mA - CRI
LED	RAL 7021	13.20	412657-00	**442**	4000K - 58656lm - CRI 70

Wiring (1 LED module) : 220-240V 50/60Hz power supply; with IP66 driver applied to the fixture.

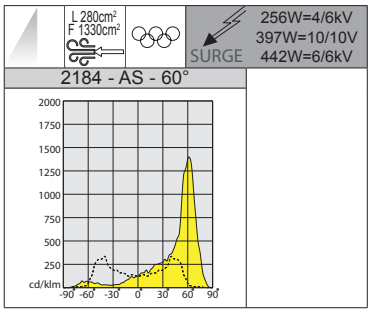



IP66IK08

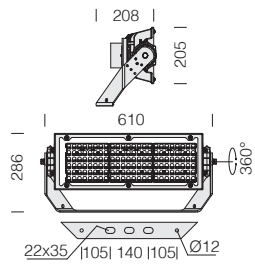

Upon request available version with:		
LED	4000K - CRI 80	700/1050/1200mA
LED	4000K - **CRI 90**	700/1050/1200mA
LED	5700K - CRI 70	700/1050/1200mA
LED	5700K - CRI 80	700/1050/1200mA
LED	5700K - **CRI 90**	700/1050/1200mA

LED: power factor ≥0,92. Luminous flux maintenance:		
70%	190.000h (L70B20)	600mA
70%	160.000h (L70B20)	900mA
70%	145.000h (L70B20)	1000mA
90%	120.000h (L90B10)	600mA
90%	100.000h (L90B10)	900mA
90%	90.000h (L90B10)	1000mA

2184 Forum with glass - 1 MODULE - asymmetric 60° - "AS"

		CLD			LUMEN OUTPUT (tq= 25 °C)
LED	colour	weight	code	W tot	K - ølm 600mA - CRI
LED	RAL 7021	13.20	412653-00	**256**	4000K - 31880lm - CRI 70
					K - ølm 900mA - CRI
LED	RAL 7021	13.20	412654-00	**397**	4000K - 45500lm - CRI 70
					K - ølm 1000mA - CRI
LED	RAL 7021	13.20	412655-00	**442**	4000K - 49440lm - CRI 70

Wiring (1 LED module) : 220-240V 50/60Hz power supply; with IP66 driver applied to the fixture.

IP66 IK08

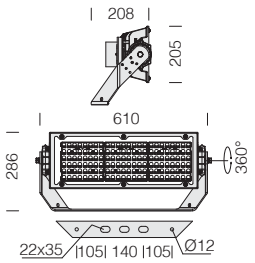

LED: power factor ≥0,92. Luminous flux maintenance:		
70%	190.000h (L70B20)	600mA
70%	160.000h (L70B20)	900mA
70%	145.000h (L70B20)	1000mA
90%	120.000h (L90B10)	600mA
90%	100.000h (L90B10)	900mA
90%	90.000h (L90B10)	1000mA

Wiring (1 LED module) : 220-240V 50/60Hz power supply; with IP66 driver applied to the fixture.



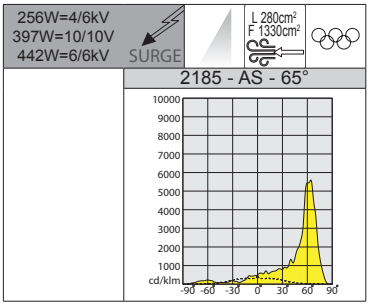

Upon request available version with:		
LED	4000K - CRI 80	700/1050/1200mA
LED	4000K - **CRI 90**	700/1050/1200mA
LED	5700K - CRI 70	700/1050/1200mA
LED	5700K - CRI 80	700/1050/1200mA
LED	5700K - **CRI 90**	700/1050/1200mA

2185 Forum with glass - 1 MODULE - asymmetric 65° - "AS"

		CLD			LUMEN OUTPUT (tq= 25 °C)
LED	colour	weight	code	W tot	K - ølm 600mA - CRI
LED	RAL 7021	13.20	412650-00	**256**	4000K - 31620lm - CRI 70
					K - ølm 900mA - CRI
LED	RAL 7021	13.20	412651-00	**397**	4000K - 45139lm - CRI 70
					K - ølm 1000mA - CRI
LED	RAL 7021	13.20	412652-00	**442**	4000K - 49100lm - CRI 70

IP66 IK08

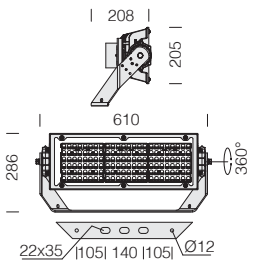

LED: power factor ≥0,92. Luminous flux maintenance:		
70%	190.000h (L70B20)	600mA
70%	160.000h (L70B20)	900mA
70%	145.000h (L70B20)	1000mA
90%	120.000h (L90B10)	600mA
90%	100.000h (L90B10)	900mA
90%	90.000h (L90B10)	1000mA

Wiring (1 LED module) : 220-240V 50/60Hz power supply; with IP66 driver applied to the fixture.



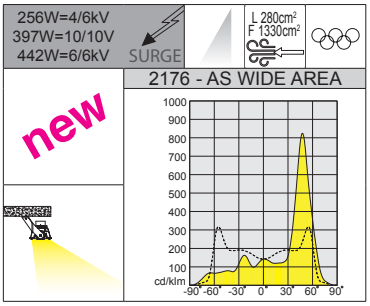

WIDE AREA version, ideal for applications where the glass is parallel to the surface to be illuminated.

Upon request available version with:		
LED	4000K - CRI 80	700/1050/1200mA
LED	4000K - **CRI 90**	700/1050/1200mA
LED	5700K - CRI 70	700/1050/1200mA
LED	5700K - CRI 80	700/1050/1200mA
LED	5700K - **CRI 90**	700/1050/1200mA

2176 Forum with glass - 1 MODULE - asymmetric WIDE AREA - "AS"

		CLD			LUMEN OUTPUT (tq= 25 °C)
LED	colour	weight	code	W tot	K - ølm 600mA - CRI
LED	RAL 7021	13.20	412646-00	**256**	4000K - **36337lm** - CRI 70
					K - ølm 900mA - CRI
LED	RAL 7021	13.20	412647-00	**397**	4000K - **51812lm** - CRI 70
					K - ølm 1000mA - CRI
LED	RAL 7021	13.20	412648-00	**442**	4000K - **56746lm** - CRI 70



IP66 IK08

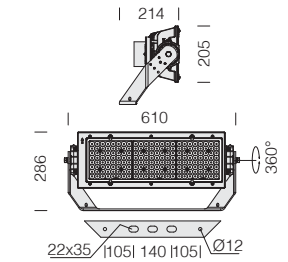

LED: power factor ≥0,92. Luminous flux maintenance:		
70%	160.000h (L70B20)	700mA
70%	145.000h (L70B20)	780mA
90%	100.000h (L90B10)	700mA
90%	90.000h (L90B10)	780mA

Wiring (1 LED module) : 220-240V 50/60Hz power supply; with IP66 driver applied to the fixture.



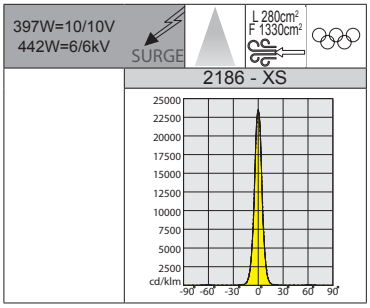

Upon request available version with:		
LED	4000K - CRI 80	700/780mA
LED	4000K - **CRI 90**	700/780mA
LED	5700K - CRI 70	700/780mA
LED	5700K - CRI 80	700/780mA
LED	5700K - **CRI 90**	700/780mA

2186 Forum with glass - 1 MODULE - narrow beam - "XS"

		CLD			LUMEN OUTPUT (tq= 25 °C)
LED	colour	weight	code	W tot	K - ølm 700mA - CRI
LED	RAL 7021	15.00	412661-00	**397**	4000K - 55416lm - CRI 70
					K - ølm 780mA - CRI
LED	RAL 7021	15.00	412662-00	**442**	4000K - 60463lm - CRI 70

RG0 Ethr · U.V. · max C° min · 180° · LOW FLICKER

FLOODLIGHTS

IP66 IK08

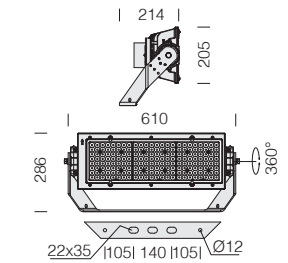

LED: power factor ≥0,92. Luminous flux maintenance:		
70%	160.000h (L70B20)	700mA
70%	145.000h (L70B20)	780mA
90%	100.000h (L90B10)	700mA
90%	90.000h (L90B10)	780mA

Wiring (1 LED module) : 220-240V 50/60Hz power supply; with IP66 driver applied to the fixture.



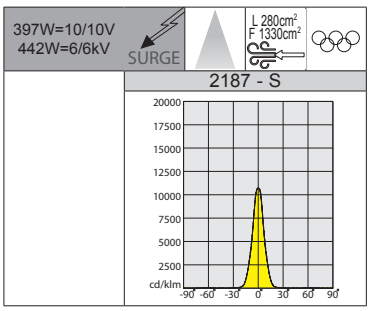

Upon request available version with:		
LED	4000K - CRI 80	700/780mA
LED	4000K - **CRI 90**	700/780mA
LED	5700K - CRI 70	700/780mA
LED	5700K - CRI 80	700/780mA
LED	5700K - **CRI 90**	700/780mA

2187 Forum with glass - 1 MODULE - narrow beam - "S"

		CLD			LUMEN OUTPUT (tq= 25 °C)
LED	colour	weight	code	W tot	K - ølm 700mA - CRI
LED	RAL 7021	15.00	412671-00	**397**	4000K - 52684lm - CRI 70
					K - ølm 780mA - CRI
LED	RAL 7021	15.00	412672-00	**442**	4000K - 57567lm - CRI 70

RG0 Ethr · U.V. · max C° min · 180° · LOW FLICKER

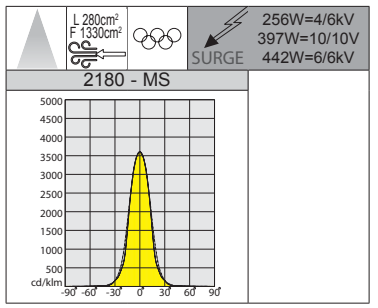



IP66 IK08

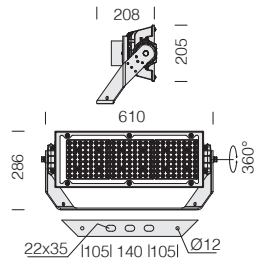

Upon request available version with:		
LED	4000K - CRI 80	450/700/780mA
LED	4000K - **CRI 90**	450/700/780mA
LED	5700K - CRI 70	450/700/780mA
LED	5700K - CRI 80	450/700/780mA
LED	5700K - **CRI 90**	450/700/780mA

LED: power factor ≥0,92. Luminous flux maintenance:		
70%	190.000h (L70B20)	450mA
70%	160.000h (L70B20)	700mA
70%	145.000h (L70B20)	780mA
90%	120.000h (L90B10)	450mA
90%	100.000h (L90B10)	700mA
90%	90.000h (L90B10)	780mA

2180 Forum with glass - 1 MODULE - symmetric - "MS"

		CLD			LUMEN OUTPUT (tq= 25 °C)
LED	colour	weight	code	W tot	K - ølm 450mA - CRI
LED	RAL 7021	13.20	412600-00	**256**	4000K - 37458lm - CRI 70
					K - ølm 700mA - CRI
LED	RAL 7021	13.20	412601-00	**397**	4000K - 54071m - CRI 70
					K - ølm 780mA - CRI
LED	RAL 7021	13.20	412602-00	**442**	4000K - 59000lm - CRI 70

Wiring (1 LED module) : 220-240V 50/60Hz power supply; with IP66 driver applied to the fixture.

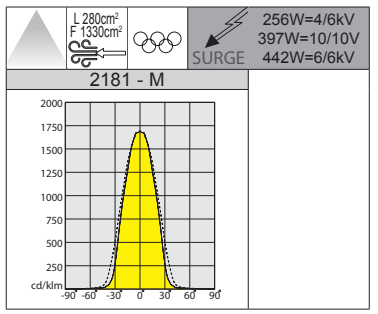



IP66 IK08

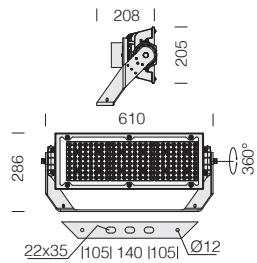

Upon request available version with:		
LED	4000K - CRI 80	450/700/780mA
LED	4000K - **CRI 90**	450/700/780mA
LED	5700K - CRI 70	450/700/780mA
LED	5700K - CRI 80	450/700/780mA
LED	5700K - **CRI 90**	450/700/780mA

LED: power factor ≥0,92. Luminous flux maintenance:		
70%	190.000h (L70B20)	450mA
70%	160.000h (L70B20)	700mA
70%	145.000h (L70B20)	780mA
90%	120.000h (L90B10)	450mA
90%	100.000h (L90B10)	700mA
90%	90.000h (L90B10)	780mA

2181 Forum with glass - 1 MODULE - symmetric - "M"

		CLD			LUMEN OUTPUT (tq= 25 °C)
LED	colour	weight	code	W tot	K - ølm 450mA - CRI
LED	RAL 7021	13.20	412610-00	**256**	4000K - 37811lm - CRI 70
					K - ølm 700mA - CRI
LED	RAL 7021	13.20	412611-00	**397**	4000K - 55581lm - CRI 70
					K - ølm 780mA - CRI
LED	RAL 7021	13.20	412612-00	**442**	4000K - 59550lm - CRI 70

Wiring (1 LED module) : 220-240V 50/60Hz power supply; with IP66 driver applied to the fixture.

IP66 IK08

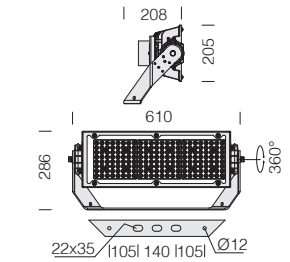

LED: power factor ≥0,92. Luminous flux maintenance:		
70%	190.000h (L70B20)	450mA
70%	160.000h (L70B20)	700mA
70%	145.000h (L70B20)	780mA
90%	120.000h (L90B10)	450mA
90%	100.000h (L90B10)	700mA
90%	90.000h (L90B10)	780mA

Wiring (1 LED module) : 220-240V 50/60Hz power supply; with IP66 driver applied to the fixture.



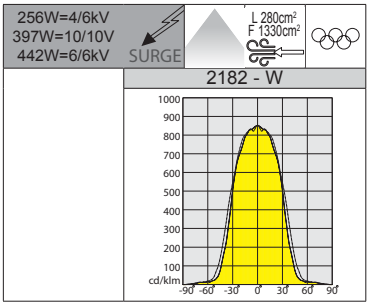

Upon request available version with:		
LED	4000K - CRI 80	450/700/780mA
LED	4000K - **CRI 90**	450/700/780mA
LED	5700K - CRI 70	450/700/780mA
LED	5700K - CRI 80	450/700/780mA
LED	5700K - **CRI 90**	450/700/780mA

2182 Forum with glass - 1 MODULE - symmetric - "W"

		CLD			LUMEN OUTPUT (tq= 25 °C)
LED	colour	weight	code	W tot	K - ølm 450mA - CRI
LED	RAL 7021	13.20	412620-00	**256**	4000K - 38582lm - CRI 70
					K - ølm 700mA - CRI
LED	RAL 7021	13.20	412621-00	**397**	4000K - 55641lm - CRI 70
					K - ølm 780mA - CRI
LED	RAL 7021	13.20	412622-00	**442**	4000K - 60766lm - CRI 70

IP66 IK08

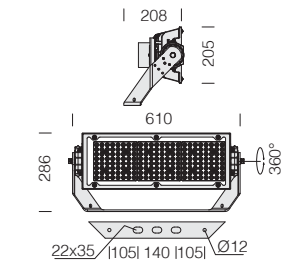

LED: power factor ≥0,92. Luminous flux maintenance:		
70%	190.000h (L70B20)	450mA
70%	160.000h (L70B20)	700mA
70%	145.000h (L70B20)	780mA
90%	120.000h (L90B10)	450mA
90%	100.000h (L90B10)	700mA
90%	90.000h (L90B10)	780mA

Wiring (1 LED module) : 220-240V 50/60Hz power supply; with IP66 driver applied to the fixture.



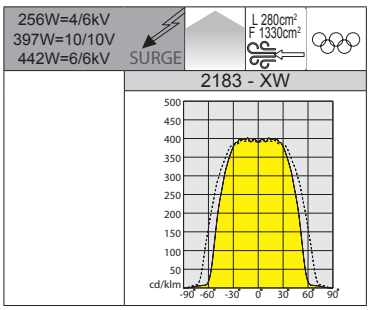

Upon request available version with:		
LED	4000K - CRI 80	450/700/780mA
LED	4000K - **CRI 90**	450/700/780mA
LED	5700K - CRI 70	450/700/780mA
LED	5700K - CRI 80	450/700/780mA
LED	5700K - **CRI 90**	450/700/780mA

2183 Forum with glass - 1 MODULE - symmetric - "XW"

		CLD			LUMEN OUTPUT (tq= 25 °C)
LED	colour	weight	code	W tot	K - ølm 450mA - CRI
LED	RAL 7021	13.20	412630-00	**256**	4000K - 38293lm - CRI 70
					K - ølm 700mA - CRI
LED	RAL 7021	13.20	412631-00	**397**	4000K - 55277lm - CRI 70
					K - ølm 780mA - CRI
LED	RAL 7021	13.20	412632-00	**442**	4000K - 60310lm - CRI 70



Infrastructure ... loading areas, stations and airports

Train stations, airports and large transit areas are regarded as “landmarks”, i.e. well defined signs of a city’s ambition and desire for renovation. This is why the design of major infrastructure is being entrusted to world-famed architects. Lighting should meet functional requirements and also enhance the challenging solutions chosen by the designers.

Lighting becomes an integral part of these public works, turning into structural elements giving them extraordinary visibility during the evenings. This new approach also applies to small train stations and roads, where proper lighting can increase safety, efficiency and energy savings and improve aesthetics.

Energy saving: Forum HE can save more energy compared to conventional discharge lamps and meet applicable standards. We recommend using LED technology to save energy in environments where lights stay on for a long time.

RG0 Ethr

U.V. FREE

max C° min

0° 180°

LOW FLICKER

3000K

4000K

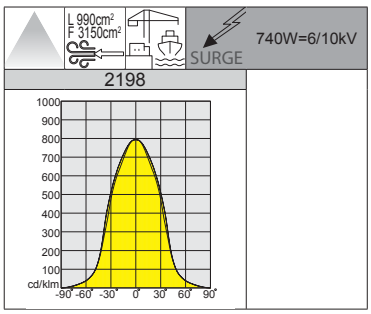

The ideal version for large spaces (squares, stations, airports, etc.)



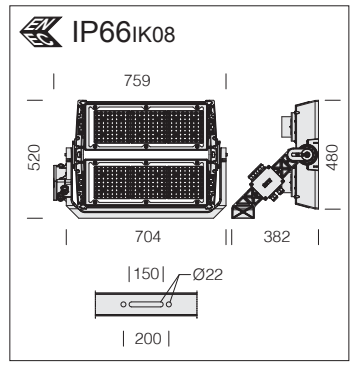

LED: power factor ≥0.92.
Luminous flux maintenance 90%: 100.000h (L90B10).

Wiring (2 LED module) : 220-240V 50/60Hz power supply; with IP66 driver applied to the fixture.

2198 Forum HE with glass - HIGH EFFICIENCY - 2 MODULES - symmetric

		CLD			LUMEN OUTPUT (tq= 25 °C)
LED	colour	weight	code	W tot	K - ølm - CRI
LED	RAL 7021	28.40	412691-00	**740**	4000K - 124960lm - CRI 70
			412691-39		3000K - 118712lm - CRI 70

IP66 IK08

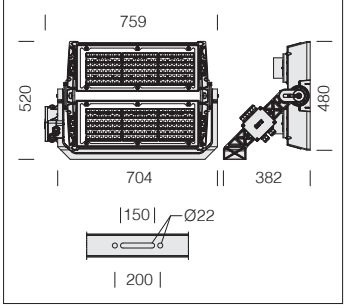

LED: power factor ≥0.92. Luminous flux maintenance 90%: 100.000h (L90B10).

Wiring (2 LED module) : 220-240V 50/60Hz power supply; with IP66 driver applied to the fixture.



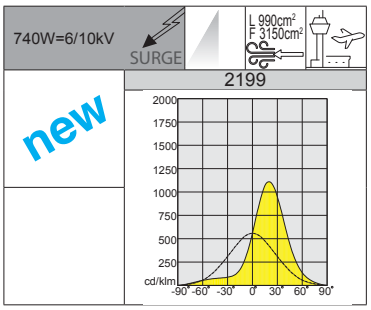

The ideal version for large spaces (squares, stations, airports, etc.)

2199 Forum HE with glass - HIGH EFFICIENCY - 2 MODULES - asymmetric

		CLD			LUMEN OUTPUT (tq= 25 °C)
LED	colour	weight	code	W tot	K - ølm - CRI
LED	RAL 7021	28.40	412696-00	**740**	4000K - **118255lm** - CRI 70
			412696-39		3000K - **112342lm** - CRI 70

IP66 IK08

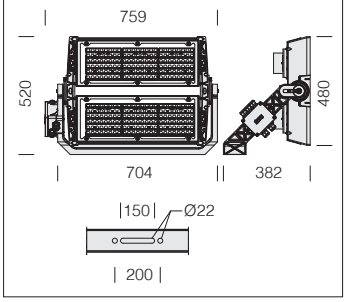

LED: power factor ≥0.92. Luminous flux maintenance 90%: 100.000h (L90B10).

Wiring (2 LED module) : 220-240V 50/60Hz power supply; with IP66 driver applied to the fixture.



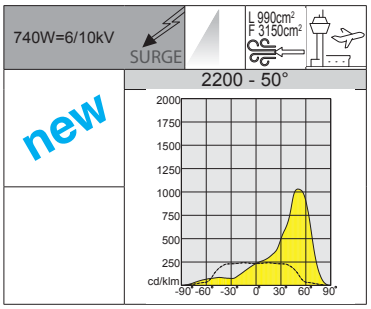

The ideal version for large spaces (squares, stations, airports, etc.)

2200 Forum HE with glass - HIGH EFFICIENCY - 2 MODULES - 50° asymmetric

		CLD			LUMEN OUTPUT (tq= 25 °C)
LED	colour	weight	code	W tot	K - ølm - CRI
LED	RAL 7021	28.40	412697-00	**740**	4000K - **113305lm** - CRI 70
			412697-39		3000K - **107639lm** - CRI 70

RGO Ethr · U.V. · max C° min · 180° · LOW FLICKER · 3000K · 4000K

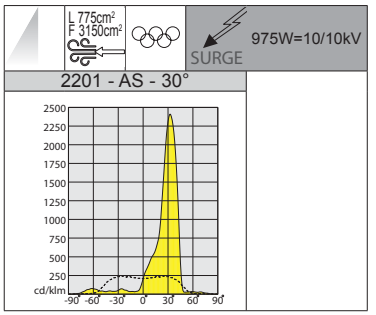



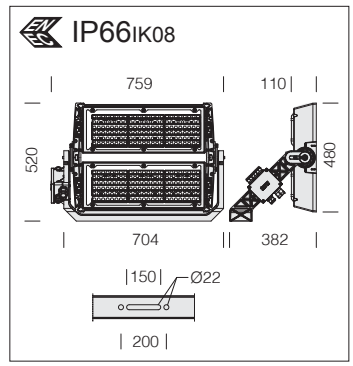

Upon request Forum 2 modules can be equipped with a **ON/OFF-DALI or DMX/ RDM** driver featuring protection level **IP66** based on the type of installation.

LED: power factor ≥0.92.
Luminous flux maintenance 90%: 100.000h (L90B10).
Wiring (2 module): supplied without driver, to be purchased separately (please request the suitable model from the company).

2201 Forum with glass - 2 MODULES - asymmetric 30° - "AS"

		CLD S+L			LED (tj= 85 °C)
LED	colour	weight	code	W	K - ølm 900mA - CRI
LED	RAL 7021	20.40	412723-00	**975**	4000K - 170000lm - CRI 70
			412723-0035		5700K - 170000lm - CRI 70
			412723-6035		5700K - 160000lm - CRI>80

Upon request: (subcode -0034)	
LED	5700K - **CRI 90**

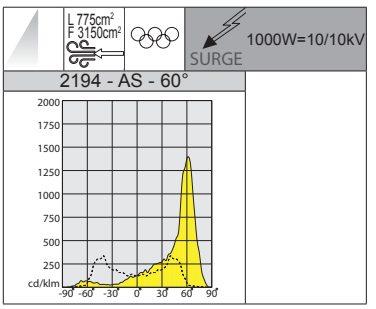



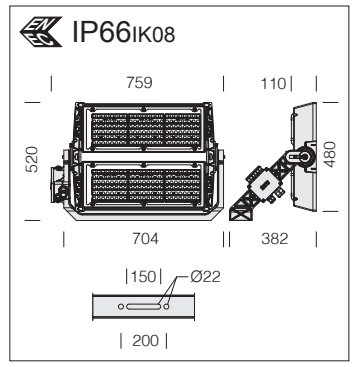

Upon request Forum 2 modules can be equipped with a **ON/OFF-DALI or DMX/ RDM** driver featuring protection level **IP66** based on the type of installation.

LED: power factor ≥0.92.
Luminous flux maintenance 90%: 100.000h (L90B10).
Wiring (2 module): supplied without driver, to be purchased separately (please request the suitable model from the company).

2194 Forum with glass - 2 MODULES - asymmetric 60° - "AS"

		CLD S+L			LED (tj= 85 °C)
LED	colour	weight	code	W	K - ølm 1200mA - CRI
LED	RAL 7021	20.40	412768-00	**1000**	4000K - 163000lm - CRI 70
			412768-0035		5700K - 163000lm - CRI 70
			412768-6035		5700K - 152000lm - CRI>80

Upon request: (subcode -0034)	
LED	5700K - **CRI 90**

IP66 IK08

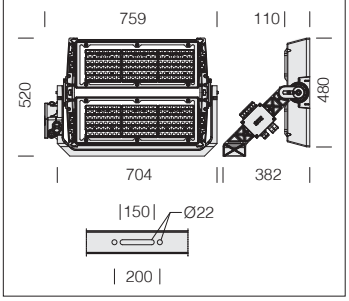

LED: power factor ≥0.92.
Luminous flux maintenance 90%: 100.000h (L90B10).
Wiring (2 module): supplied without driver, to be purchased separately (please request the suitable model from the company).

Upon request: (subcode -0034)	
LED	5700K - **CRI 90**



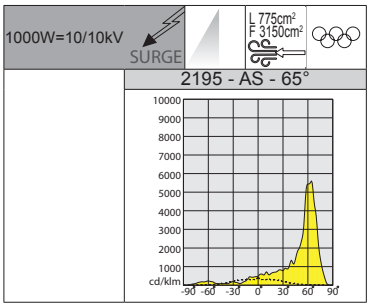

Upon request Forum 2 modules can be equipped with a **ON/OFF-DALI or DMX/ RDM** driver featuring protection level **IP66** based on the type of installation.

2195 Forum with glass - 2 MODULES - asymmetric 65° - "AS"

		CLD S+L			LED (tj= 85 °C)
LED	colour	weight	code	W	K - ølm 1200mA - CRI
LED	RAL 7021	20.40	412765-00	**1000**	4000K - 163000lm - CRI 70
			412765-0035		5700K - 163000lm - CRI 70
			412765-6035		5700K - 152000lm - CRI>80

IP66 IK08

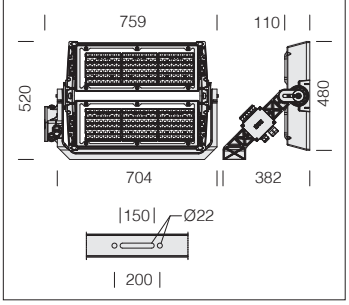

LED: power factor ≥0.92.
Luminous flux maintenance 90%: 100.000h (L90B10).
Wiring (2 module): supplied without driver, to be purchased separately (please request the suitable model from the company).

Upon request: (subcode -0034)	
LED	5700K - **CRI 90**



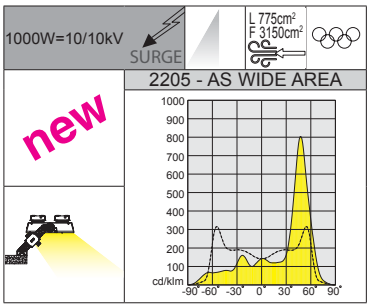

WIDE AREA version, ideal for applications where the glass is parallel to the surface to be illuminated.

Upon request Forum 2 modules can be equipped with a **ON/OFF-DALI or DMX/ RDM** driver featuring protection level **IP66** based on the type of installation.

2205 Forum with glass - 2 MODULES - asymmetric WIDE AREA - "AS"

		CLD S+L			LED (tj= 85 °C)
LED	colour	weight	code	W	K - ølm 1200mA - CRI
LED	RAL 7021	20.40	412685-00	**1000**	4000K - **163000lm** - CRI 70
			412685-0035		5700K - **163000lm** - CRI 70
			412685-6035		5700K - **152000lm** - CRI>80


D2
D3
D4
20:27

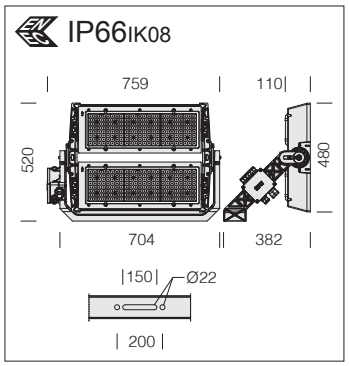



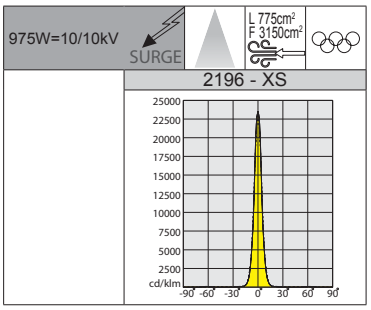

LED: power factor ≥0.92.
Luminous flux maintenance 90%: 100.000h (L90B10).
Wiring (2 module): supplied without driver, to be purchased separately (please request the suitable model from the company).

Upon request Forum 2 modules can be equipped with a **ON/OFF-DALI or DMX/ RDM** driver featuring protection level **IP66** based on the type of installation.

Upon request: (subcode -0034)	
LED	5700K - **CRI 90**

2196 Forum with glass - 2 MODULES - narrow beam - "XS"

			CLD S+L		LED (tj= 85 °C)
LED	colour	weight	code	W	K - ølm 900mA - CRI
LED	RAL 7021	22.20	412770-00	**975**	4000K - 158000lm - CRI 70
			412770-0035		5700K - 158000lm - CRI 70
			412770-6035		5700K - 142000lm - CRI>80

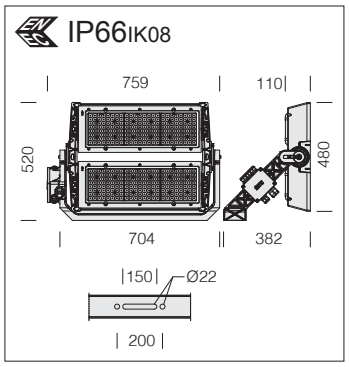

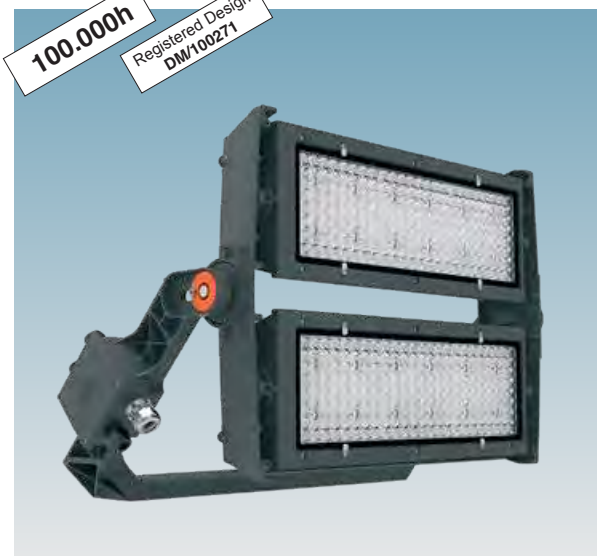

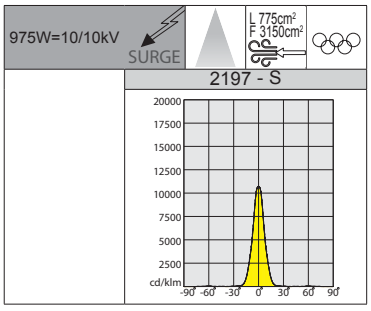

LED: power factor ≥0.92.
Luminous flux maintenance 90%: 100.000h (L90B10).
Wiring (2 module): supplied without driver, to be purchased separately (please request the suitable model from the company).

Upon request Forum 2 modules can be equipped with a **ON/OFF-DALI or DMX/ RDM** driver featuring protection level **IP66** based on the type of installation.

Upon request: (subcode -0034)	
LED	5700K - **CRI 90**

2197 Forum with glass - 2 MODULES - narrow beam - "S"

			CLD S+L		LED (tj= 85 °C)
LED	colour	weight	code	W	K - ølm 900mA - CRI
LED	RAL 7021	22.20	412780-00	**975**	4000K - 170000lm - CRI 70
			412780-0035		5700K - 170000lm - CRI 70
			412780-6035		5700K - 160000lm - CRI>80

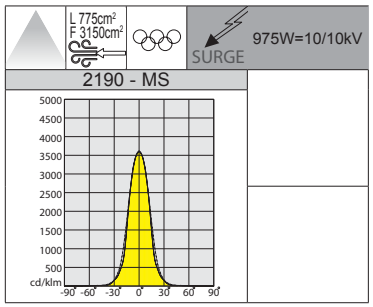



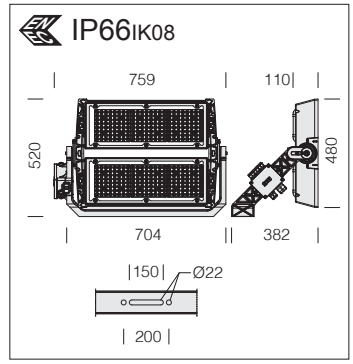

Upon request Forum 2 modules can be equipped with a **ON/OFF-DALI or DMX/ RDM** driver featuring protection level **IP66** based on the type of installation.

LED: power factor ≥0.92.
Luminous flux maintenance 90%: 100.000h (L90B10).
Wiring (2 module): supplied without driver, to be purchased separately (please request the suitable model from the company).

2190 Forum with glass - 2 MODULES - symmetric - "MS"

		CLD S+L			LED (tj= 85 °C)
LED	colour	weight	code	W	K - ølm 900mA - CRI
LED	RAL 7021	20.40	412891-00	**975**	4000K - 170000lm - CRI 70
			412891-0035		5700K - 170000lm - CRI 70
			412891-6035		5700K - 160000lm - CRI>80

Upon request: (subcode -0034)	
LED	5700K - **CRI 90**

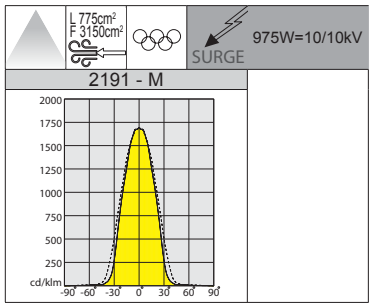



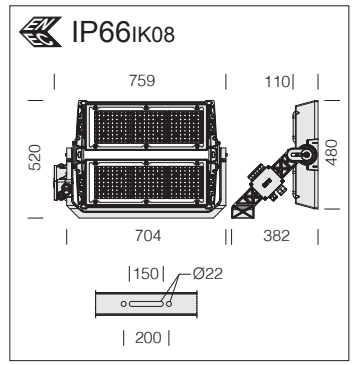

Upon request Forum 2 modules can be equipped with a **ON/OFF-DALI or DMX/ RDM** driver featuring protection level **IP66** based on the type of installation.

LED: power factor ≥0.92.
Luminous flux maintenance 90%: 100.000h (L90B10).
Wiring (2 module): supplied without driver, to be purchased separately (please request the suitable model from the company).

2191 Forum with glass - 2 MODULES - symmetric - "M"

		CLD S+L			LED (tj= 85 °C)
LED	colour	weight	code	W	K - ølm 900mA - CRI
LED	RAL 7021	20.40	412750-00	**975**	4000K - 170000lm - CRI 70
			412750-0035		5700K - 170000lm - CRI 70
			412750-6035		5700K - 160000lm - CRI>80

Upon request: (subcode -0034)	
LED	5700K - **CRI 90**

IP66 IK08

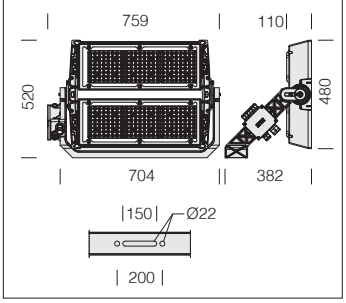



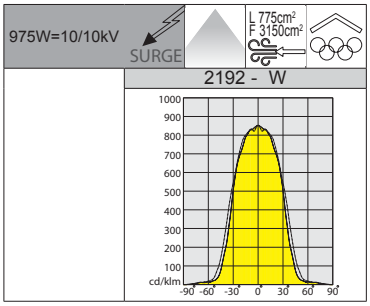

LED: power factor ≥0.92.
Luminous flux maintenance 90%: 100.000h (L90B10).
Wiring (2 module): supplied without driver, to be purchased separately (please request the suitable model from the company).

Upon request Forum 2 modules can be equipped with a **ON/OFF-DALI or DMX/ RDM** driver featuring protection level **IP66** based on the type of installation.

Upon request: (subcode -0034)	
LED	5700K - **CRI 90**

2192 Forum with glass - 2 MODULES - symmetric - "W"

			CLD S+L		LED (tj= 85 °C)
LED	colour	weight	code	W	K - ølm 900mA - CRI
LED	RAL 7021	20.40	412790-00	**975**	4000K - 170000lm - CRI 70
			412790-0035		5700K - 170000lm - CRI 70
			412790-6035		5700K - 160000lm - CRI>80

IP66 IK08

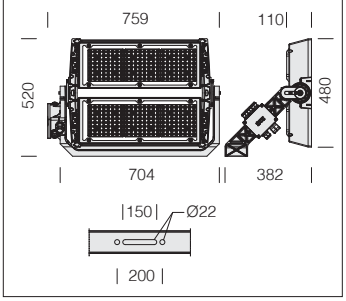



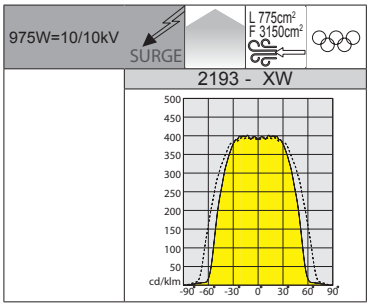

LED: power factor ≥0.92.
Luminous flux maintenance 90%: 100.000h (L90B10).
Wiring (2 module): supplied without driver, to be purchased separately (please request the suitable model from the company).

Upon request Forum 2 modules can be equipped with a **ON/OFF-DALI or DMX/ RDM** driver featuring protection level **IP66** based on the type of installation.

Upon request: (subcode -0034)	
LED	5700K - **CRI 90**

2193 Forum with glass - 2 MODULES - symmetric - "XW"

			CLD S+L		LED (tj= 85 °C)
LED	colour	weight	code	W	K - ølm 900mA - CRI
LED	RAL 7021	20.40	412681-00	**975**	4000K - 170000lm - CRI 70
			412681-0035		5700K - 170000lm - CRI 70
			412681-6035		5700K - 160000lm - CRI>80

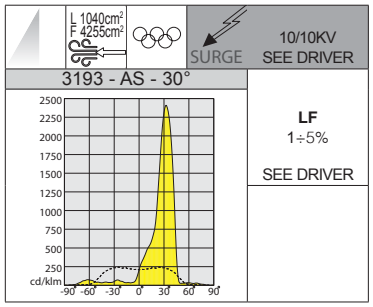



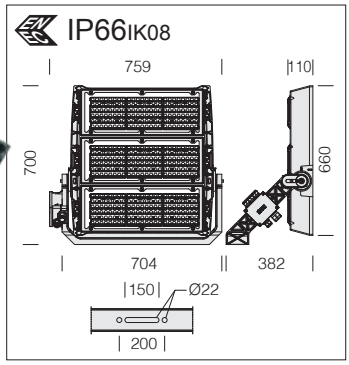

Upon request Forum 3 modules can be equipped with a **ON/OFF-DALI or DMX/ RDM** driver featuring protection level **IP66** based on the type of installation.

LED: power factor ≥0.92.
Luminous flux maintenance 90%: 100.000h (L90B10).
Wiring (3 module): supplied without driver, to be purchased separately (please request the suitable model from the company).

3193 Forum with glass - 3 MODULES - asymmetric 30° - "AS"					
		CLD S+L			**LED (tj= 85 °C)**
LED	colour	weight	code	**W**	K - ølm 900mA - CRI
LED	RAL 7021	28.50	412868-00	**1465**	4000K - 254650lm - CRI 70
			412868-0035		5700K - 254650lm - CRI 70
			412868-6035		5700K - 238100lm - CRI>80

Upon request: (subcode -0034)	
LED	5700K - **CRI 90**

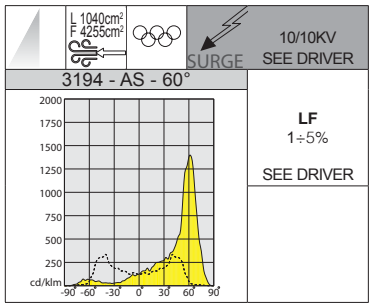



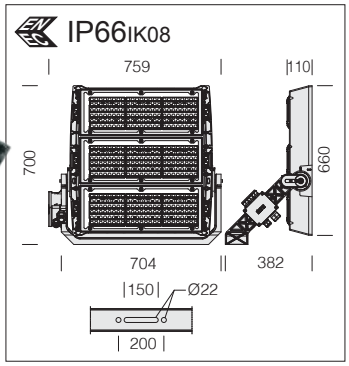

LED: power factor ≥0.92.
Luminous flux maintenance 90%: 100.000h (L90B10).
Wiring (3 module): supplied without driver, to be purchased separately (please request the suitable model from the company).

3194 Forum with glass - 3 MODULES - asymmetric 60° - "AS"					
		CLD S+L			**LED (tj= 85 °C)**
LED	colour	weight	code	**W**	K - ølm 1200mA - CRI
LED	RAL 7021	28.50	412824-00	**1500**	4000K - 244360lm - CRI 70
			412824-0035		5700K - 244360lm - CRI 70
			412824-6035		5700K - 228480lm - CRI>80

Upon request: (subcode -0034)	
LED	5700K - **CRI 90**

IP66 IK08

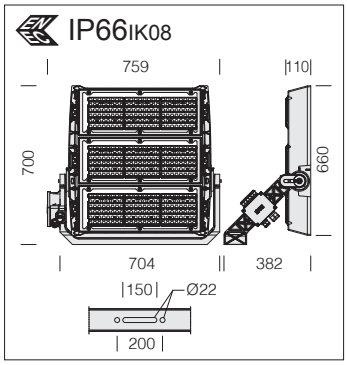



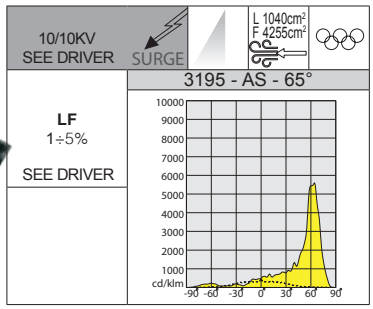

LED: power factor ≥0.92.
Luminous flux maintenance 90%: 100.000h (L90B10).
Wiring (3 module): supplied without driver, to be purchased separately (please request the suitable model from the company).

Upon request Forum 3 modules can be equipped with a **ON/OFF-DALI or DMX/ RDM** driver featuring protection level **IP66** based on the type of installation.

Upon request: (subcode -0034)	
LED	5700K - **CRI 90**

3195 Forum with glass - 3 MODULES - asymmetric 65° - "AS"

		CLD S+L			LED (tj= 85 °C)
LED	colour	weight	code	W	K - ølm 1200mA - CRI
LED	RAL 7021	28.50	412820-00	**1500**	4000K - 244360lm - CRI 70
			412820-0035		5700K - 244360lm - CRI 70
			412820-6035		5700K - 228480lm - CRI>80

IP66 IK08

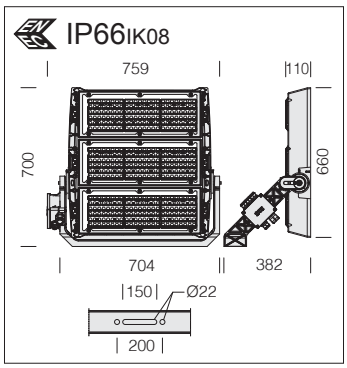



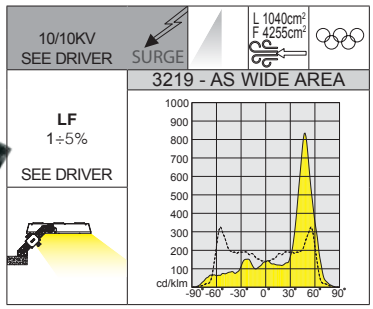

WIDE AREA version, ideal for applications where the glass is parallel to the surface to be illuminated.

LED: power factor ≥0.92.
Luminous flux maintenance 90%: 100.000h (L90B10).
Wiring (3 module): supplied without driver, to be purchased separately (please request the suitable model from the company).

Upon request Forum 3 modules can be equipped with a **ON/OFF-DALI or DMX/ RDM** driver featuring protection level **IP66** based on the type of installation.

Upon request: (subcode -0034)	
LED	5700K - **CRI 90**

3219 Forum with glass - 3 MODULES - asymmetric WIDE AREA - "AS"

		CLD S+L			LED (tj= 85 °C)
LED	colour	weight	code	W	K - ølm 1200mA - CRI
LED	RAL 7021	28.50	412885-00	**1500**	4000K - **244360lm** - CRI 70
			412885-0035		5700K - **244360lm** - CRI 70
			412885-6035		5700K - **228480lm** - CRI>80



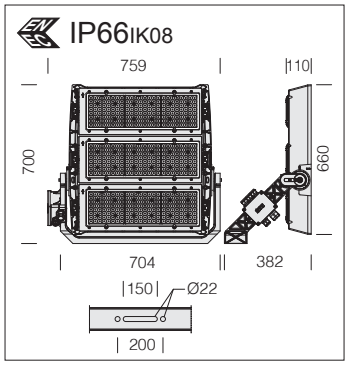

LED: power factor ≥0.92.
Luminous flux maintenance 90%: 100.000h (L90B10).
Wiring (3 module): supplied without driver, to be purchased separately (please request the suitable model from the company).

Upon request: (subcode -0034)	
LED	5700K - **CRI 90**



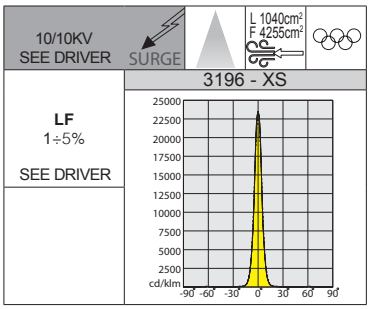

Upon request Forum 3 modules can be equipped with a **ON/OFF-DALI or DMX/ RDM** driver featuring protection level **IP66** based on the type of installation.

3196 Forum with glass - 3 MODULES - narrow beam - "XS"

		CLD S+L			LED (tj= 85 °C)
LED	colour	weight	code	W	K - ølm 900mA - CRI
LED	RAL 7021	31.20	412800-00	**1465**	4000K - 236735m - CRI 70
			412800-0035		5700K - 236735m - CRI 70
			412800-6035		5700K - 213060lm - CRI>80

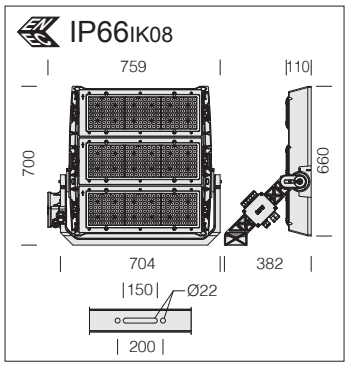

LED: power factor ≥0.92.
Luminous flux maintenance 90%: 100.000h (L90B10).
Wiring (3 module): supplied without driver, to be purchased separately (please request the suitable model from the company).

Upon request: (subcode -0034)	
LED	5700K - **CRI 90**



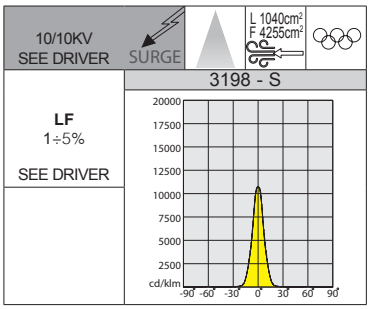

Upon request Forum 3 modules can be equipped with a **ON/OFF-DALI or DMX/ RDM** driver featuring protection level **IP66** based on the type of installation.

3198 Forum with glass - 3 MODULES - narrow beam - "S"

		CLD S+L			LED (tj= 85 °C)
LED	colour	weight	code	W	K - ølm 900mA - CRI
LED	RAL 7021	31.20	412810-00	**1465**	4000K - 254650lm - CRI 70
			412810-0035		5700K - 254650lm - CRI 70
			412810-6035		5700K - 238100lm - CRI>80

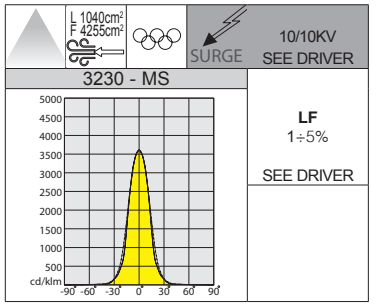



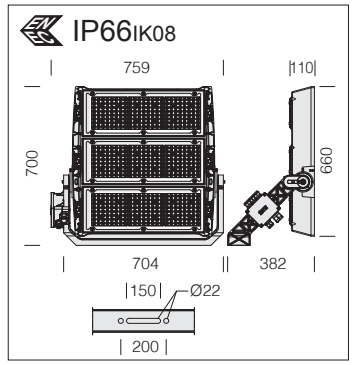

Upon request Forum 3 modules can be equipped with a **ON/OFF-DALI or DMX/ RDM** driver featuring protection level **IP66** based on the type of installation.

LED: power factor ≥0.92.
Luminous flux maintenance 90%: 100.000h (L90B10).
Wiring (3 module): supplied without driver, to be purchased separately (please request the suitable model from the company).

3230 Forum with glass - 3 MODULES - symmetric - "MS"					
			CLD S+L		**LED (tj= 85 °C)**
LED	colour	weight	code	**W**	K - ølm 900mA - CRI
LED	RAL 7021	28.50	412840-00	**1465**	4000K - 254650lm - CRI 70
			412840-0035		5700K - 254650lm - CRI 70
			412840-6035		5700K - 238100lm - CRI>80

Upon request: (subcode -0034)	
LED	5700K - **CRI 90**

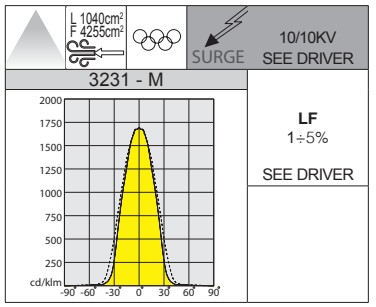



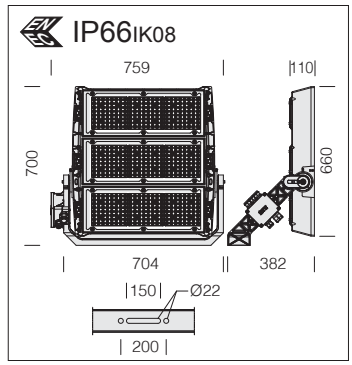

Upon request Forum 3 modules can be equipped with a **ON/OFF-DALI or DMX/ RDM** driver featuring protection level **IP66** based on the type of installation.

LED: power factor ≥0.92.
Luminous flux maintenance 90%: 100.000h (L90B10).
Wiring (3 module): supplied without driver, to be purchased separately (please request the suitable model from the company).

3231 Forum with glass - 3 MODULES - symmetric - "M"					
			CLD S+L		**LED (tj= 85 °C)**
LED	colour	weight	code	**W**	K - ølm 900mA - CRI
LED	RAL 7021	28.50	412870-00	**1465**	4000K - 254650lm - CRI 70
			412870-0035		5700K - 254650lm - CRI 70
			412870-6035		5700K - 238100lm - CRI>80

Upon request: (subcode -0034)	
LED	5700K - **CRI 90**

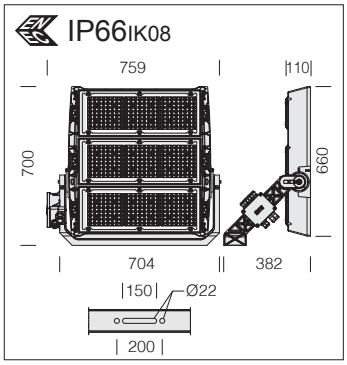



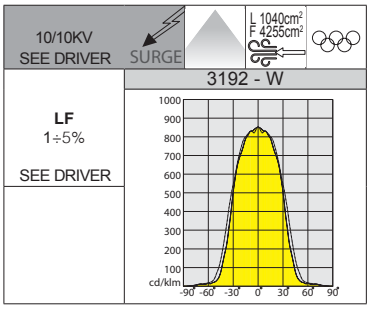

LED: power factor ≥0.92.
Luminous flux maintenance 90%: 100.000h (L90B10).
Wiring (3 module): supplied without driver, to be purchased separately (please request the suitable model from the company).

Upon request Forum 3 modules can be equipped with a **ON/OFF-DALI or DMX/ RDM** driver featuring protection level **IP66** based on the type of installation.

Upon request: (subcode -0034)	
LED	5700K - **CRI 90**

3192 Forum with glass - 3 MODULES - symmetric - "W"

		CLD S+L			LED (tj= 85 °C)
LED	colour	weight	code	W	K - ølm 900mA - CRI
LED	RAL 7021	28.50	412830-00	**1465**	4000K - 254650lm - CRI 70
			412830-0035		5700K - 254650lm - CRI 70
			412830-6035		5700K - 238100lm - CRI>80

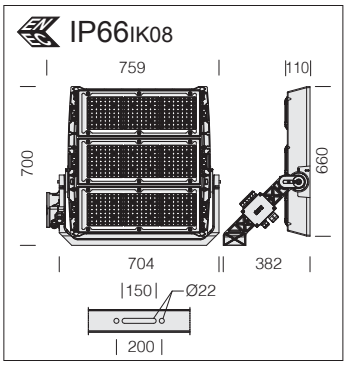



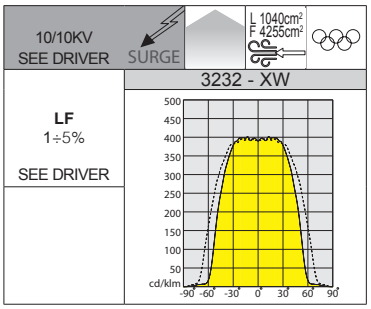

LED: power factor ≥0.92.
Luminous flux maintenance 90%: 100.000h (L90B10).
Wiring (3 module): supplied without driver, to be purchased separately (please request the suitable model from the company).

Upon request Forum 3 modules can be equipped with a **ON/OFF-DALI or DMX/ RDM** driver featuring protection level **IP66** based on the type of installation.

Upon request: (subcode -0034)	
LED	5700K - **CRI 90**

3232 Forum with glass - 3 MODULES - symmetric - "XW"

		CLD S+L			LED (tj= 85 °C)
LED	colour	weight	code	W	K - ølm 900mA - CRI
LED	RAL 7021	28.50	412880-00	**1465**	4000K - 254650lm - CRI 70
			412880-0035		5700K - 254650lm - CRI 70
			412880-6035		5700K - 238100lm - CRI>80

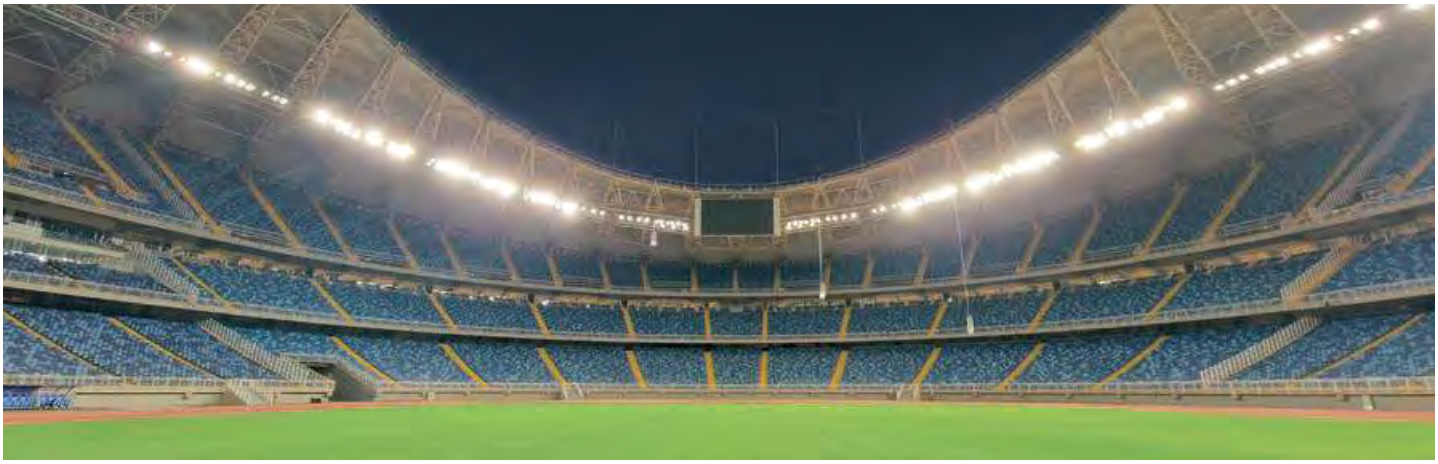

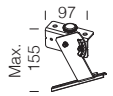

acc. 197 adjustable light beam pointing mount

RAL 7021	60°-65° vers.	995792-00
RAL 7021	30° vers.	995799-00

Adjustable light beam pointing support for asymmetric versions.

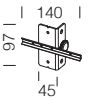

acc. 199 fixed light beam pointing mount

RAL 7021	995793-00

Fixed light beam pointing support for symmetric versions.

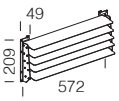

acc. 27 XS lamellar shielding

RAL 7021	997940-00

Made of painted aluminium plate to be used on Forum 2.0 with symmetrical beams. Install on individual modules for XS optics shielding.

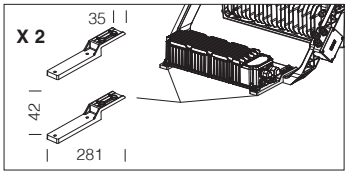

acc. 198 driver support brackets

RAL 7021	995789-00

In steel. To be used for installing the Type 6-7 driver directly on the bracket in 2/3-module versions.

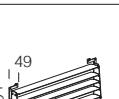

acc. 28 S-MS lamellar shielding

RAL 7021	997941-00

Made of painted aluminium plate to be used on Forum 2.0 with symmetrical beams. Install on individual modules for S - MS optics shielding.

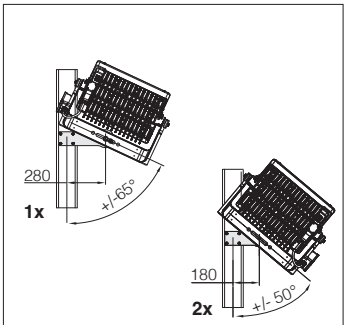

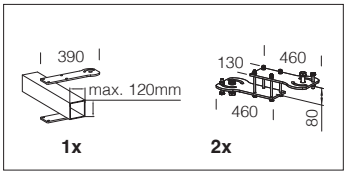

acc. 484 aiming bracket

1X	995777-00
2X	995798-00

Adjustable steel bracket for aiming the light beam of 2/3-module version Forum 2.0 during installation.

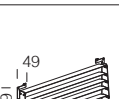

acc. 29 M lamellar shielding

RAL 7021	997942-00

Made of painted aluminium plate to be used on Forum 2.0 with symmetrical beams. Install on individual modules for M optics shielding.

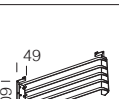

acc. 30 W lamellar shielding

RAL 7021	997943-00

Made of painted aluminium plate to be used on Forum 2.0 with symmetrical beams. Install on individual modules for W optics shielding.

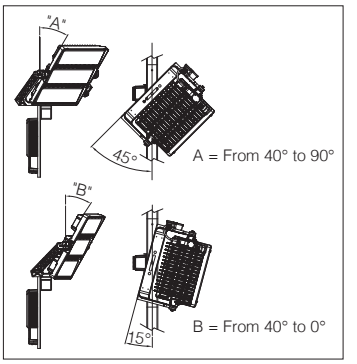

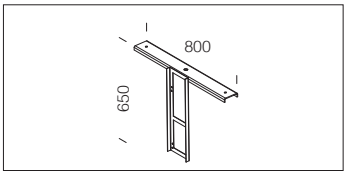

acc. 488 driver vertical support

steel	995797-00

Steel driver support bracket designed for the vertical installation of Forum 2.0 2/3-module type 6-7 drivers.

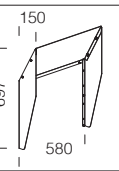

acc. 482 ASYM deflector

RAL 7021	995790-00

Made of painted aluminium plate to be used on Forum 2.0 with asymmetrical beams for the most accurate control of spill light.

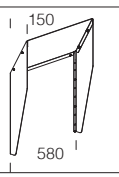

acc. 482 ASYM deflector

RAL 7021	995791-00

Made of painted aluminium plate to be used on Forum 2.0 with asymmetrical beams for the most accurate control of spill light.

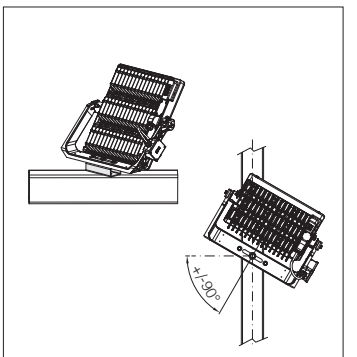

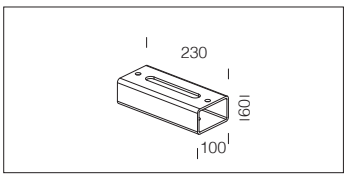

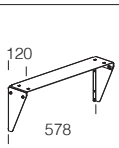

acc. 483 SYM single deflector

RAL 7021	995796-00

Made of painted aluminium plate to be used on Forum 2.0 with symmetrical beams. Install on individual modules for the most accurate control of spill light. Upon request: shielded extension for deflector (contact our sales office).

acc. 490 bracket spacer

steel	995800-00

Steel swivel spacer that mounts directly to the Forum 2.0 2/3-module bracket. Used to create distance between the spotlight and the installation surface, allowing for easier adjustment and precise pointing.

GENERAL CHARACTERISTICS

Housing: in die-cast aluminium with cooling fins.

Optics: high-performance, extra-clear polycarbonate secondary lenses.

Diffuser: injected moulded in anti-yellowing extra-clear polycarbonate, in V2 self-extinguishing, UV-stabilised material, resistant to impacts (UNI-EN 12150-1 : 2001).

Coating: the fully automated powder-coating cycle involves a polyester-based, salt-spray corrosion-resistant and UV-stabilised paint.

Standard Supply: complete with coated die-cast aluminium bracket with graduated scale goniometer which allows for accurate pointing, external screws and bolts in stainless steel; air recirculation valve with protection device; with dedicated electronic device to protect the LED module.

SURGE Electronic safety device to protect the LED module and the related ballast compliant with EN 61547.

It works in two modes:
- differential mode: surge between power cables and between the phase and neutral.
- common mode: surge between power, L/N and ground cables or between the fixture's body if it is installed on a metal pole.

Products compliant with ball impact resistance test standard DIN 18032-3: 2018

LOW FLICKER Product with a very low flicker; uniform light for greater eye protection.

OTHER CHARACTERISTICS

The family of Forum 2.0 floodlights includes versions with narrow, symmetric and asymmetric beam optics with different highly efficient LED sources. A truly complete range of products offering the best performance to meet all outdoor lighting needs for:

- Buildings and façades

- Industrial zones, harbour areas, train stations and loading/unloading bays

- Public or private infrastructure, airports, metro stations, car parks and transit zones

- Stadiums or indoor and outdoor multi-sport facilities (tennis court, basketball court, swimming pool, velodrome, hockey rink, volleyball court, etc...).

• The careful selection of the materials and electronic components ensures full safety during operation, guaranteeing total resistance to impacts and accidental collisions, thermal shocks and weather agents.

• The shape of the body allows obtaining diverse combinations of power, lumen and luminous beams; in fact, it is available in versions with single, double or triple modules, with asymmetric light distribution, narrow beam or symmetric beams.

• Precision optics that allow broad design flexibility guaranteeing high levels of light quality, eliminating flicker during TV broadcasting.

Registered Design **DM/100271** The International Bureau of the World Intellectual Property Organization (WIPO) hereby certifies that the particulars given below correspond to the recording made in the International Register of Industrial Designs.

OTHER INFORMATION



Structure 2/3 LED modules : in die-cast aluminium with bracket for spotlight mounting.

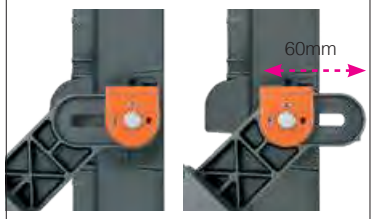

Luminaire bracket in die-cast aluminium made to move 60mm along the horizontal axis to give greater light pointing freedom.



Junction box for terminals in die-cast aluminium on the support bracket

OTHER INFORMATION

Stand for spotlights' pointer system: fixed for symmetrical versions and adjustable for asymmetrical versions.



UPON REQUEST

The fixture can be equipped with several light dimmers:
- 1-10V (dimmable from 20% to 100%) or DALI dimmable driver
- power line carrier (PLC) remote control
- wireless control system

Protective coating recommended for marine environments within 5 km of the sea.

Standard 2 modules version with:

separate driver	ON/OFF-DALI	700/900/1200mA
	DMX/RDM	700/900/1200mA

You can equip Forum 2.0 with a stainless-steel flexible tube to protect the cable connecting the junction box and the LED modules.

Luminous flux maintenance Power factor ≥0.92		Wattage (tot.)	Allowed ambient temperature (min.°C ÷ max.°C)
Forum 2.0 HE *(art. 2198-2199-2200)*			
90%	100.000h (L90B10)	740W	Ta = -30°C ÷ +40°C

Luminous flux maintenance Power factor ≥0.92		Wattage W	Allowed ambient temperature		
			Ta min	Ta INDOOR max	Ta OUTDOOR max
Forum 2.0 *(art. 2190-2191-2192-2193-2194-2195-2196-2197-2201-2202)*					
90%	100.000h (L90B10) @700/900mA	760W 975W	-40°C	35°C	45°C
90%	100.000h (L90B10) @900/1200mA	750W 1000W	-40°C	35°C	45°C

Luminous flux maintenance Power factor ≥0.92		Wattage W	Allowed ambient temperature		
			Ta min	Ta INDOOR max	Ta OUTDOOR max
Forum 2.0 *(art. 3192-3193-3194-3195-3196-3198-3203-3230-3231-3232)*					
90%	100.000h (L90B10) @700/900mA	1140W 1465W	-40°C	35°C	45°C
90%	100.000h (L90B10) @900/1200mA	1125W 1500W	-40°C	35°C	45°C

The table below shows the values for standard versions. For further information (expected life, temperatures) and/or for special versions, please contact our customer service.





Infrastructure ... loading areas, stations and airports

Train stations, airports and large transit areas are regarded as “landmarks”, i.e. well defined signs of a city’s ambition and desire for renovation. This is why the design of major infrastructure is being entrusted to world-famed architects. Lighting should meet functional requirements and also enhance the challenging solutions chosen by the designers.

Lighting becomes an integral part of these public works, turning into structural elements giving them extraordinary visibility during the evenings. This new approach also applies to small train stations and roads, where proper lighting can increase safety, efficiency and energy savings and improve aesthetics.

Energy saving: Forum HE can save more energy compared to conventional discharge lamps and meet applicable standards. We recommend using LED technology to save energy in environments where lights stay on for a long time.

RG0 Ethr

U.V.

max C° min

0° 180°

LOW FLICKER

3000K

4000K

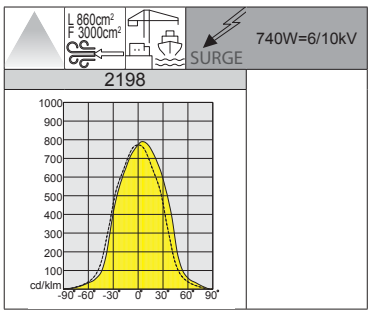

The ideal version for large spaces (squares, stations, airports, etc.)



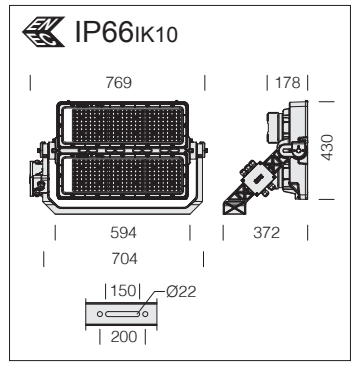

LED: power factor ≥0.92.
Luminous flux maintenance 90%: 100.000h (L90B10).

Wiring (2 LED module) : 220-240V 50/60Hz power supply; with IP66 driver applied to the fixture.

2198 Forum 2.0 HE - HIGH EFFICIENCY - 2 MODULES - symmetric

		CLD			LUMEN OUTPUT (tq= 25 °C)
LED	colour	weight	code	W tot	K - ølm - CRI
LED	RAL 7021	27.00	412692-00	**740**	4000K - 124960lm - CRI 70
			412692-39		3000K - 118712lm - CRI 70

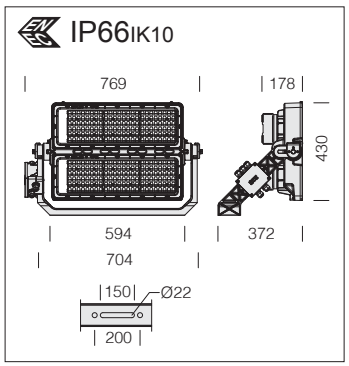

LED: power factor ≥0.92. Luminous flux maintenance 90%: 100.000h (L90B10).

Wiring (2 LED module) : 220-240V 50/60Hz power supply; with IP66 driver applied to the fixture.



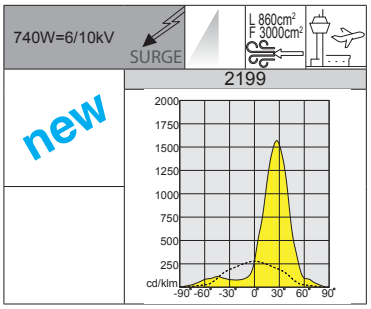

The ideal version for large spaces (squares, stations, airports, etc.)

2199 Forum 2.0 HE - HIGH EFFICIENCY - 2 MODULES - asymmetric

		CLD			LUMEN OUTPUT (tq= 25 °C)
LED	colour	weight	code	W tot	K - ølm - CRI
LED	RAL 7021	26.90	412694-00	**740**	4000K - **124721lm** - CRI 70
			412694-39		3000K - **118485lm** - CRI 70

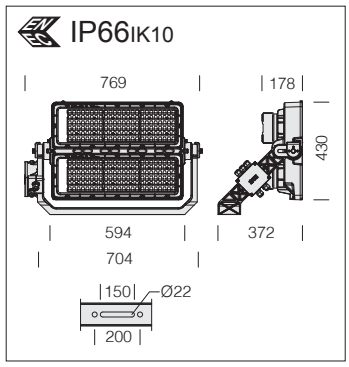

LED: power factor ≥0.92. Luminous flux maintenance 90%: 100.000h (L90B10).

Wiring (2 LED module) : 220-240V 50/60Hz power supply; with IP66 driver applied to the fixture.



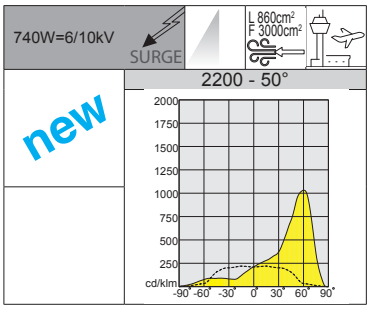

The ideal version for large spaces (squares, stations, airports, etc.)

2200 Forum 2.0 HE - HIGH EFFICIENCY - 2 MODULES - 50° asymmetric

		CLD			LUMEN OUTPUT (tq= 25 °C)
LED	colour	weight	code	W tot	K - ølm - CRI
LED	RAL 7021	26.90	412699-00	**740**	4000K - **110379lm** - CRI 70
			412699-39		3000K - **104860lm** - CRI 70

RG0 Ethr | U.V. | max C° min | 0° 180° | LOW FLICKER | 4000K | 5700K

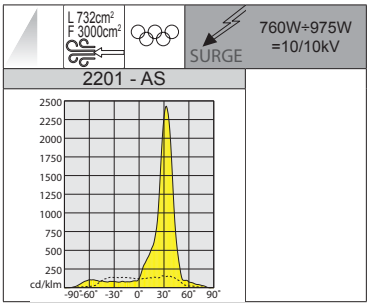



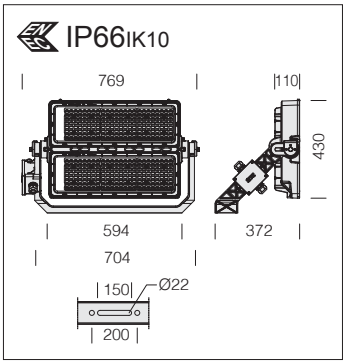

Upon request Forum 2 modules can be equipped with a **ON/OFF-DALI or DMX/ RDM** driver featuring protection level **IP66** based on the type of installation.

LED: power factor ≥0.92.
Luminous flux maintenance 90%: 100.000h (L90B10).
Wiring (2 module): supplied without driver, to be purchased separately (please request the suitable model from the company).

Upon request: (subcode -0034)	
LED	5700K - **CRI 90**

2201 Forum 2.0 - 2 MODULES - asymmetric 30° - "AS"

		CLD S+L			LED (tj= 85 °C)
LED	colour	weight	code	W	K - ølm 700mA - CRI
LED	RAL 7021	20.40	412724-00	**760**	4000K - 132000lm - CRI 70
					K - ølm 900mA - CRI
LED	RAL 7021	20.40	412722-00	**975**	4000K - 170000lm - CRI 70
			412722-0035		5700K - 170000lm - CRI 70
			412722-6035		5700K - 160000lm - CRI>80

RG0 Ethr | U.V. | max C° min | 0° 180° | LOW FLICKER | 4000K | 5700K

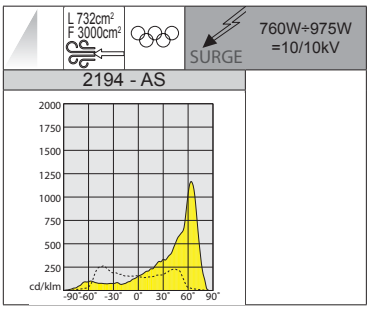



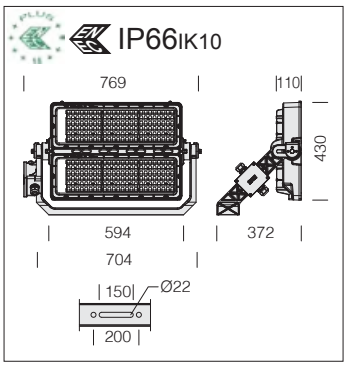

Upon request Forum 2 modules can be equipped with a **ON/OFF-DALI or DMX/ RDM** driver featuring protection level **IP66** based on the type of installation.

LED: power factor ≥0.92.
Luminous flux maintenance 90%: 100.000h (L90B10).
Wiring (2 module): supplied without driver, to be purchased separately (please request the suitable model from the company).

Upon request: (subcode -0034)	
LED	5700K - **CRI 90**

2194 Forum 2.0 - 2 MODULES - asymmetric 60° - "AS"

		CLD S+L			LED (tj= 85 °C)
LED	colour	weight	code	W	K - ølm 900mA - CRI
LED	RAL 7021	20.40	412737-00	**750**	4000K - 122000lm - CRI 70
					K - ølm 1200mA - CRI
LED	RAL 7021	20.40	412736-00	**1000**	4000K - 163000lm - CRI 70
			412736-0035		5700K - 163000lm - CRI 70
			412736-6035		5700K - 152000lm - CRI>80

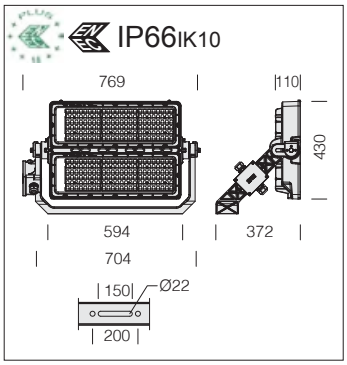



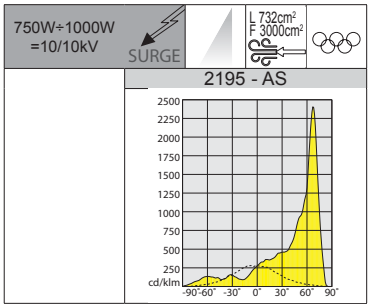

LED: power factor ≥0.92.
Luminous flux maintenance 90%: 100.000h (L90B10).
Wiring (2 module): supplied without driver, to be purchased separately (please request the suitable model from the company).

Upon request Forum 2 modules can be equipped with a **ON/OFF-DALI or DMX/ RDM** driver featuring protection level **IP66** based on the type of installation.

Upon request: (subcode -0034)	
LED	5700K - **CRI 90**

2195 Forum 2.0 - 2 MODULES - asymmetric 65° - "AS"

		CLD S+L			LED (tj= 85 °C)
LED	colour	weight	code	W	K - ølm 900mA - CRI
LED	RAL 7021	20.40	412758-00	**750**	4000K - 122000lm - CRI 70
					K - ølm 1200mA - CRI
LED	RAL 7021	20.40	412769-00	**1000**	4000K - 163000lm - CRI 70
			412769-0035		5700K - 163000lm - CRI 70
			412769-6035		5700K - 152000lm - CRI>80

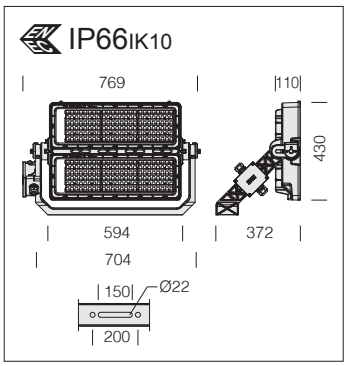



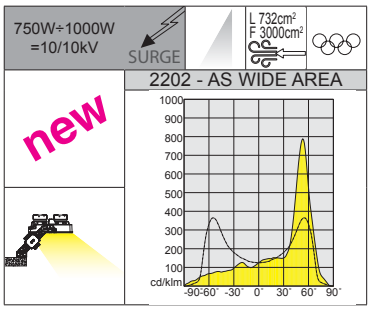

WIDE AREA version, ideal for applications where the glass is parallel to the surface to be illuminated.

LED: power factor ≥0.92.
Luminous flux maintenance 90%: 100.000h (L90B10).
Wiring (2 module): supplied without driver, to be purchased separately (please request the suitable model from the company).

Upon request Forum 2 modules can be equipped with a **ON/OFF-DALI or DMX/ RDM** driver featuring protection level **IP66** based on the type of installation.

Upon request: (subcode -0034)	
LED	5700K - **CRI 90**

2195 Forum 2.0 - 2 MODULES - asymmetric WIDE AREA - "AS"

		CLD S+L			LED (tj= 85 °C)
LED	colour	weight	code	W	K - ølm 900mA - CRI
LED	RAL 7021	20.40	412689 -00	**750**	4000K - **122000lm** - CRI 70
					K - ølm 1200mA - CRI
LED	RAL 7021	20.40	412688-00	**1000**	4000K - **163000lm** - CRI 70
			412688-0035		5700K - **163000lm** - CRI 70
			412688-6035		5700K - **152000lm** - CRI>80


Assistència Sanitària
Assistència Sanitària
AssistènciaSanitària
AssistènciaSanitària

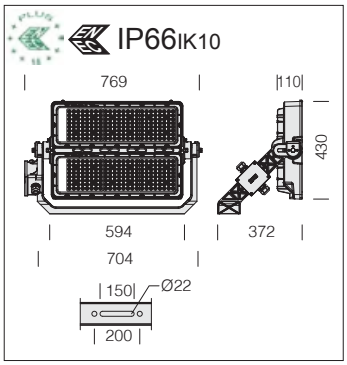



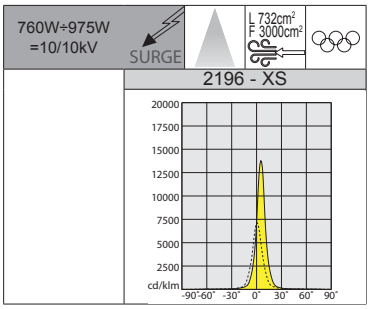

LED: power factor ≥0.92.
Luminous flux maintenance 90%: 100.000h (L90B10).
Wiring (2 module): supplied without driver, to be purchased separately (please request the suitable model from the company).

Upon request Forum 2 modules can be equipped with a **ON/OFF-DALI or DMX/RDM** driver featuring protection level **IP66** based on the type of installation.

Upon request: (subcode -0034)	
LED	5700K - **CRI 90**

2196 Forum 2.0 - 2 MODULES - narrow beam - "XS"

		CLD S+L			LED (tj= 85 °C)
LED	colour	weight	code	W	K - ølm 700mA - CRI
LED	RAL 7021	2.80	412777-00	**760**	4000K - 123000lm - CRI 70
					K - ølm 900mA - CRI
LED	RAL 7021	2.80	412776-00	**975**	4000K - 158000lm - CRI 70
			412776-0035		5700K - 158000lm - CRI 70
			412776-6035		5700K - 142000lm - CRI>80



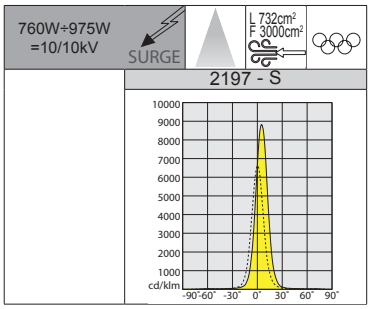

Acc. 199: stand for spotlights' pointer system.

LED: power factor ≥0.92.
Luminous flux maintenance 90%: 100.000h (L90B10).
Wiring (2 module): supplied without driver, to be purchased separately (please request the suitable model from the company).

Upon request Forum 2 modules can be equipped with a **ON/OFF-DALI or DMX/RDM** driver featuring protection level **IP66** based on the type of installation.

Upon request: (subcode -0034)	
LED	5700K - **CRI 90**

2197 Forum 2.0 - 2 MODULES - narrow beam - "S"

		CLD S+L			LED (tj= 85 °C)
LED	colour	weight	code	W	K - ølm 700mA - CRI
LED	RAL 7021	2.80	412787-00	**760**	4000K - 132000lm - CRI 70
					K - ølm 900mA - CRI
LED	RAL 7021	2.80	412786-00	**975**	4000K - 170000lm - CRI 70
			412786-0035		5700K - 170000lm - CRI 70
			412786-6035		5700K - 160000lm - CRI>80

RG0 Ethr · U.V. · max C° min · 0° 180° · LOW FLICKER · 4000K · 5700K

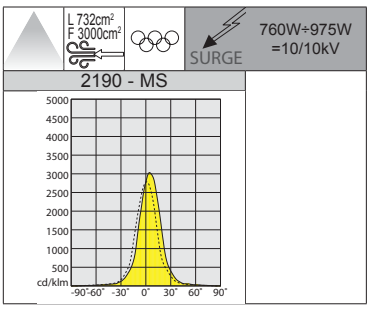



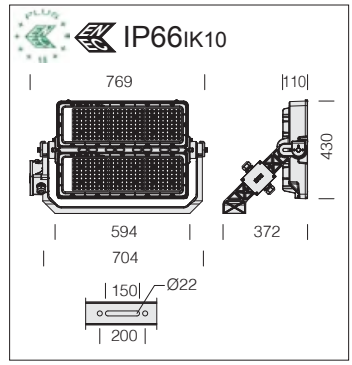

Upon request Forum 2 modules can be equipped with a **ON/OFF-DALI or DMX/ RDM** driver featuring protection level **IP66** based on the type of installation.

LED: power factor ≥0.92.
Luminous flux maintenance 90%: 100.000h (L90B10).
Wiring (2 module): supplied without driver, to be purchased separately (please request the suitable model from the company).

Upon request: (subcode -0034)	
LED	5700K - **CRI 90**

2190 Forum 2.0 - 2 MODULES - symmetric - "MS"

		CLD S+L			LED (tj= 85 °C)
LED	colour	weight	code	W	K - ølm 700mA - CRI
LED	RAL 7021	20.40	412897-00	**760**	4000K - 132000lm - CRI 70
					K - ølm 900mA - CRI
LED	RAL 7021	20.40	412896-00	**975**	4000K - 170000lm - CRI 70
			412896-0035		5700K - 170000lm - CRI 70
			412896-6035		5700K - 160000lm - CRI>80

RG0 Ethr · U.V. · max C° min · 0° 180° · LOW FLICKER · 4000K · 5700K

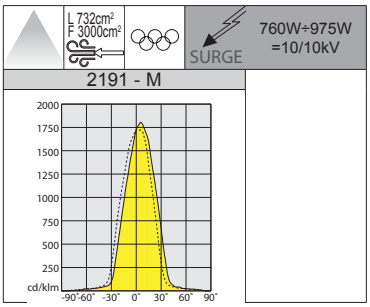



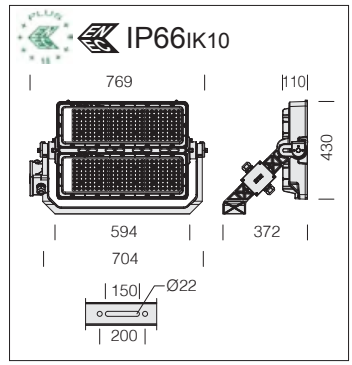

Upon request Forum 2 modules can be equipped with a **ON/OFF-DALI or DMX/ RDM** driver featuring protection level **IP66** based on the type of installation.

LED: power factor ≥0.92.
Luminous flux maintenance 90%: 100.000h (L90B10).
Wiring (2 module): supplied without driver, to be purchased separately (please request the suitable model from the company).

Upon request: (subcode -0034)	
LED	5700K - **CRI 90**

2191 Forum 2.0 - 2 MODULES - symmetric - "M"

		CLD S+L			LED (tj= 85 °C)
LED	colour	weight	code	W	K - ølm 700mA - CRI
LED	RAL 7021	20.40	412745-00	**760**	4000K - 132000lm - CRI 70
					K - ølm 900mA - CRI
LED	RAL 7021	20.40	412746-00	**975**	4000K - 170000lm - CRI 70
			412746-0035		5700K - 170000lm - CRI 70
			412746-6035		5700K - 160000lm - CRI>80

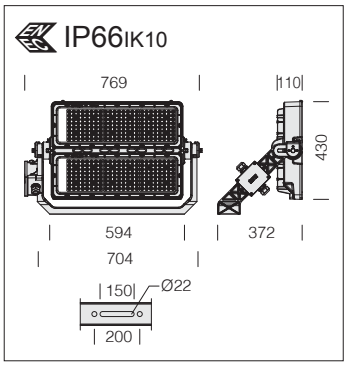



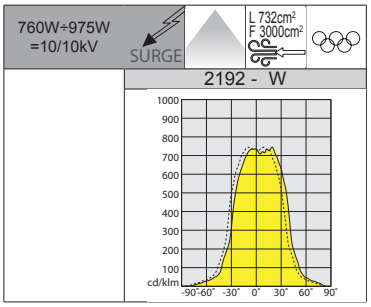

LED: power factor ≥0.92.
Luminous flux maintenance 90%: 100.000h (L90B10).
Wiring (2 module): supplied without driver, to be purchased separately (please request the suitable model from the company).

Upon request Forum 2 modules can be equipped with a **ON/OFF-DALI or DMX/ RDM** driver featuring protection level **IP66** based on the type of installation.

Upon request: (subcode -0034)	
LED	5700K - **CRI 90**

2192 Forum 2.0 - 2 MODULES - symmetric - "W"

		CLD S+L			LED (tj= 85 °C)
LED	colour	weight	code	W	K - ølm 700mA - CRI
LED	RAL 7021	20.40	412797-00	**760**	4000K - 132000lm - CRI 70
					K - ølm 900mA - CRI
LED	RAL 7021	20.40	412796-00	**975**	4000K - 170000lm - CRI 70
			412796-0035		5700K - 170000lm - CRI 70
			412796-6035		5700K - 160000lm - CRI>80

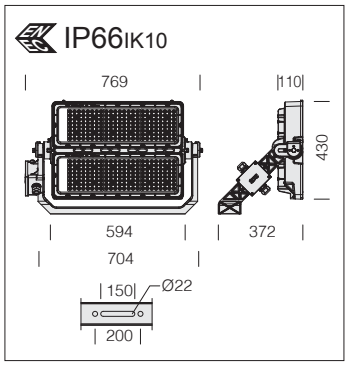



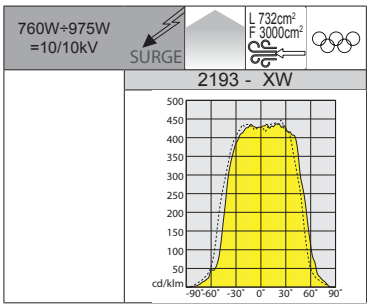

LED: power factor ≥0.92.
Luminous flux maintenance 90%: 100.000h (L90B10).
Wiring (2 module): supplied without driver, to be purchased separately (please request the suitable model from the company).

Upon request Forum 2 modules can be equipped with a **ON/OFF-DALI or DMX/ RDM** driver featuring protection level **IP66** based on the type of installation.

Upon request: (subcode -0034)	
LED	5700K - **CRI 90**

2193 Forum 2.0 - 2 MODULES - symmetric - "XW"

		CLD S+L			LED (tj= 85 °C)
LED	colour	weight	code	W	K - ølm 700mA - CRI
LED	RAL 7021	20.40	412687-00	**760**	4000K - 132000lm - CRI 70
					K - ølm 900mA - CRI
LED	RAL 7021	20.40	412686-00	**975**	4000K - 170000lm - CRI 70
			412686-0035		5700K - 170000lm - CRI 70
			412686-6035		5700K - 160000lm - CRI>80

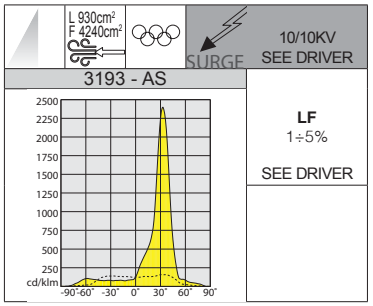



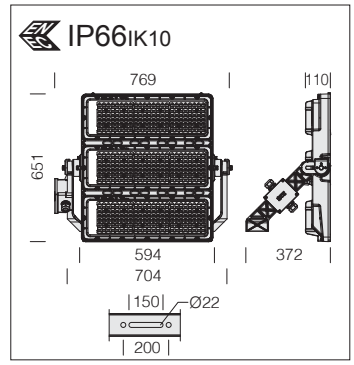

Upon request Forum 3 modules can be equipped with a **ON/OFF-DALI or DMX/ RDM** driver featuring protection level **IP66** based on the type of installation.

LED: power factor ≥0.92.
Luminous flux maintenance 90%: 100.000h (L90B10).
Wiring (3 module): supplied without driver, to be purchased separately (please request the suitable model from the company).

Upon request: (subcode -0034)	
LED	5700K - **CRI 90**

3193 Forum 2.0 - 3 MODULES - asymmetric 30° - "AS"

		CLD S+L			LED (tj= 85 °C)
LED	colour	weight	code	W	K - ølm 700mA - CRI
LED	RAL 7021	25.00	412867-00	**1140**	4000K - 198000lm - CRI 70
					K - ølm 900mA - CRI
LED	RAL 7021	25.00	412860-00	**1465**	4000K - 254650lm - CRI 70
			412860-0035		5700K - 254650lm - CRI 70
			412860-6035		5700K - 238100lm - CRI>80

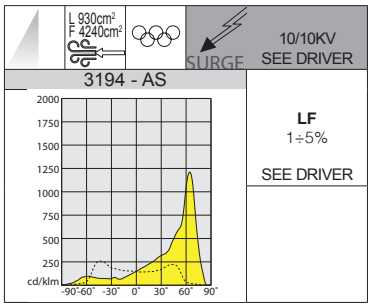



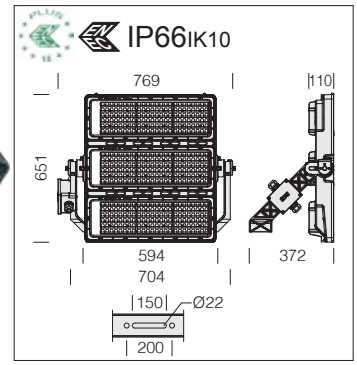

Upon request Forum 3 modules can be equipped with a **ON/OFF-DALI or DMX/ RDM** driver featuring protection level **IP66** based on the type of installation.

LED: power factor ≥0.92.
Luminous flux maintenance 90%: 100.000h (L90B10).
Wiring (3 module): supplied without driver, to be purchased separately (please request the suitable model from the company).

Upon request: (subcode -0034)	
LED	5700K - **CRI 90**

3194 Forum 2.0 - 3 MODULES - asymmetric 60° - "AS"

		CLD S+L			LED (tj= 85 °C)
LED	colour	weight	code	W	K - ølm 900mA - CRI
LED	RAL 7021	25.00	412835-00	**1125**	4000K - 183000lm - CRI 70
					K - ølm 1200mA - CRI
LED	RAL 7021	25.00	412829-00	**1500**	4000K - 244360lm - CRI 70
			412829-0035		5700K - 244360lm - CRI 70
			412829-6035		5700K - 228480lm - CRI>80

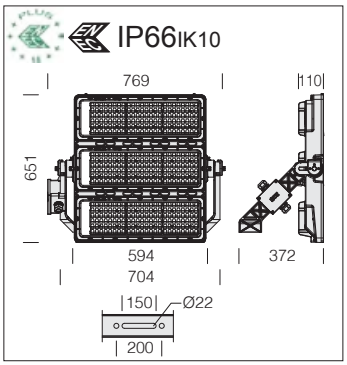



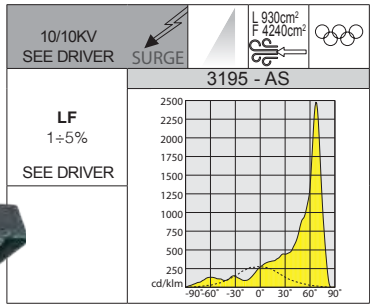

LED: power factor ≥0.92.
Luminous flux maintenance 90%: 100.000h (L90B10).
Wiring (3 module): supplied without driver, to be purchased separately (please request the suitable model from the company).

Upon request Forum 3 modules can be equipped with a **ON/OFF-DALI or DMX/ RDM** driver featuring protection level **IP66** based on the type of installation.

Upon request: (subcode -0034)	
LED	5700K - **CRI 90**

3195 Forum 2.0 - 3 MODULES - asymmetric 65° - "AS"

		CLD S+L			LED (tj= 85 °C)
LED	colour	weight	code	W	K - ølm 900mA - CRI
LED	RAL 7021	25.00	412837-00	**1125**	4000K - 183000lm - CRI 70
					K - ølm 1200mA - CRI
LED	RAL 7021	25.00	412836-00	**1500**	4000K - 244360lm - CRI 70
			412836-0035		5700K - 244360lm - CRI 70
			412836-6035		5700K - 228480lm - CRI>80



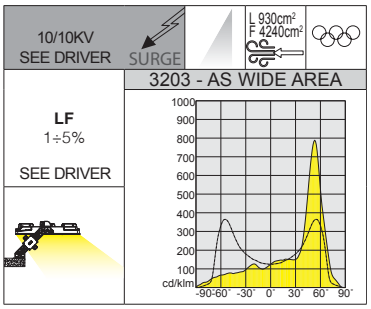

WIDE AREA version, ideal for applications where the glass is parallel to the surface to be illuminated.

LED: power factor ≥0.92.
Luminous flux maintenance 90%: 100.000h (L90B10).
Wiring (3 module): supplied without driver, to be purchased separately (please request the suitable model from the company).

Upon request Forum 3 modules can be equipped with a **ON/OFF-DALI or DMX/ RDM** driver featuring protection level **IP66** based on the type of installation.

Upon request: (subcode -0034)	
LED	5700K - **CRI 90**

3203 Forum 2.0 - 3 MODULES - asymmetric WIDE AREA - "AS"

		CLD S+L			LED (tj= 85 °C)
LED	colour	weight	code	W	K - ølm 900mA - CRI
LED	RAL 7021	25.00	412886-00	**1125**	4000K - **183000lm** - CRI 70
					K - ølm 1200mA - CRI
LED	RAL 7021	25.00	412887-00	**1500**	4000K - **244360lm** - CRI 70
			412887-0035		5700K - **244360lm** - CRI 70
			412887-6035		5700K - **228480lm** - CRI>80


#KrimovaDruzina
BROUGHT BY CONTAINER
BROUGHT BY CONTAINER

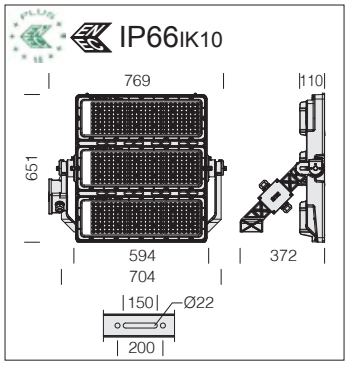

LED: power factor ≥0.92.
Luminous flux maintenance 90%: 100.000h (L90B10).
Wiring (3 module): supplied without driver, to be purchased separately (please request the suitable model from the company).

Upon request: (subcode -0034)	
LED	5700K - **CRI 90**



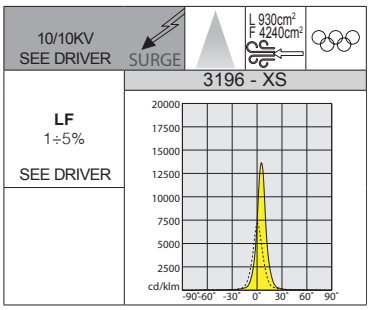

Upon request Forum 3 modules can be equipped with a **ON/OFF-DALI or DMX/RDM** driver featuring protection level **IP66** based on the type of installation.

3196 Forum 2.0 - 3 MODULES - narrow beam - "XS"

		CLD S+L			LED (tj= 85 °C)
LED	colour	weight	code	W	K - ølm 700mA - CRI
LED	RAL 7021	25.90	412804-00	**1140**	4000K - 184000lm - CRI 70
					K - ølm 900mA - CRI
LED	RAL 7021	25.90	412803-00	**1465**	4000K - 236735lm - CRI 70
			412803-0035		5700K - 236735lm - CRI 70
			412803-6035		5700K - 213060lm - CRI>80

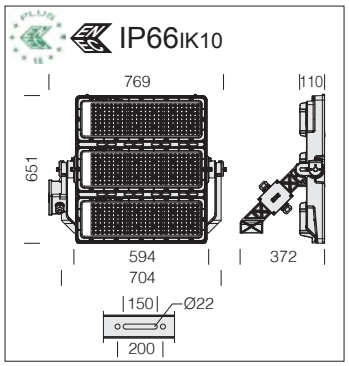

LED: power factor ≥0.92.
Luminous flux maintenance 90%: 100.000h (L90B10).
Wiring (3 module): supplied without driver, to be purchased separately (please request the suitable model from the company).

Upon request: (subcode -0034)	
LED	5700K - **CRI 90**



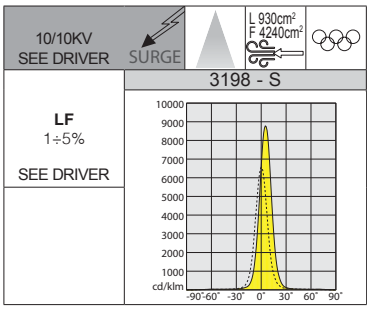

Acc. 199: stand for spotlights' pointer system.

Upon request Forum 3 modules can be equipped with a **ON/OFF-DALI or DMX/RDM** driver featuring protection level **IP66** based on the type of installation.

3198 Forum 2.0 - 3 MODULES - narrow beam - "S"

		CLD S+L			LED (tj= 85 °C)
LED	colour	weight	code	W	K - ølm 700mA - CRI
LED	RAL 7021	25.90	412814-00	**1140**	4000K - 198000lm - CRI 70
					K - ølm 900mA - CRI
LED	RAL 7021	25.90	412813-00	**1465**	4000K - 254650lm - CRI 70
			412813-0035		5700K - 254650lm - CRI 70
			412813-6035		5700K - 238100lm - CRI>80

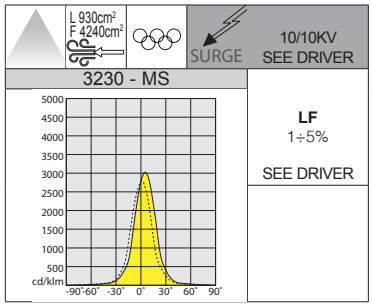



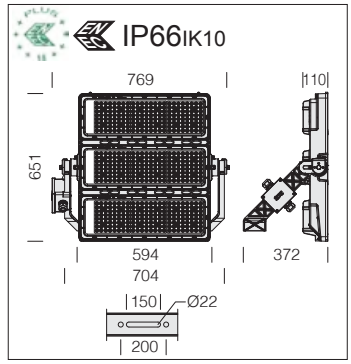

Upon request Forum 3 modules can be equipped with a **ON/OFF-DALI or DMX/ RDM** driver featuring protection level **IP66** based on the type of installation.

LED: power factor ≥0.92.
Luminous flux maintenance 90%: 100.000h (L90B10).
Wiring (3 module): supplied without driver, to be purchased separately (please request the suitable model from the company).

3230 Forum 2.0 - 3 MODULES - symmetric - "MS"					
		CLD S+L			**LED (tj= 85 °C)**
LED	colour	weight	code	**W**	K - ølm 700mA - CRI
LED	RAL 7021	25.00	412844-00	**1140**	4000K - 198000lm - CRI 70
					K - ølm 900mA - CRI
LED	RAL 7021	25.00	412843-00	**1465**	4000K - 254650lm - CRI 70
			412843-0035		5700K - 254650lm - CRI 70
			412843-6035		5700K - 238100lm - CRI>80

Upon request: (subcode -0034)	
LED	5700K - **CRI 90**

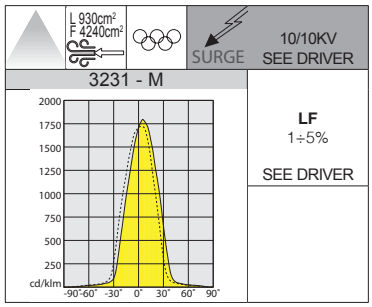



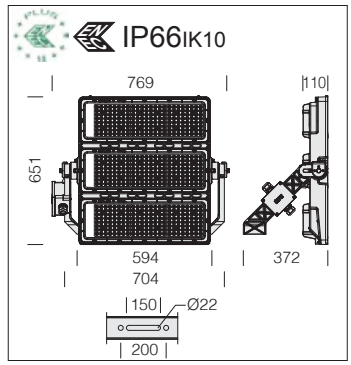

Upon request Forum 3 modules can be equipped with a **ON/OFF-DALI or DMX/ RDM** driver featuring protection level **IP66** based on the type of installation.

LED: power factor ≥0.92.
Luminous flux maintenance 90%: 100.000h (L90B10).
Wiring (3 module): supplied without driver, to be purchased separately (please request the suitable model from the company).

3231 Forum 2.0 - 3 MODULES - symmetric - "M"					
		CLD S+L			**LED (tj= 85 °C)**
LED	colour	weight	code	**W**	K - ølm 700mA - CRI
LED	RAL 7021	25.00	412874-00	**1140**	4000K - 198000lm - CRI 70
					K - ølm 900mA - CRI
LED	RAL 7021	25.00	412873-00	**1465**	4000K - 254650lm - CRI 70
			412873-0035		5700K - 254650lm - CRI 70
			412873-6035		5700K - 238100lm - CRI>80

Upon request: (subcode -0034)	
LED	5700K - **CRI 90**

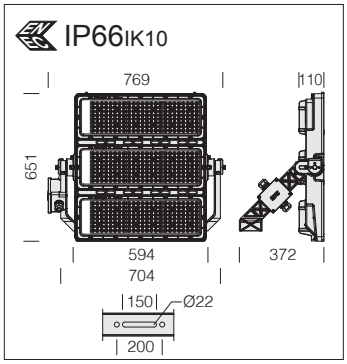

LED: power factor ≥0.92.
Luminous flux maintenance 90%: 100.000h (L90B10).
Wiring (3 module): supplied without driver, to be purchased separately (please request the suitable model from the company).

Upon request: (subcode -0034)	
LED	5700K - **CRI 90**



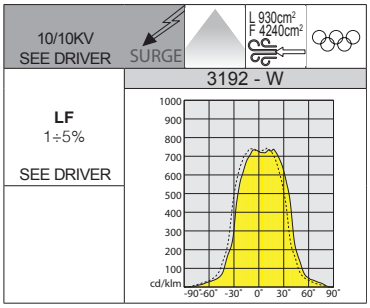

Upon request Forum 3 modules can be equipped with a **ON/OFF-DALI or DMX/RDM** driver featuring protection level **IP66** based on the type of installation.

3192 Forum 2.0 - 3 MODULES - symmetric - "W"

		CLD S+L			LED (tj= 85 °C)
LED	colour	weight	code	W	K - ølm 700mA - CRI
LED	RAL 7021	25.00	412834-00	**1140**	4000K - 198000lm - CRI 70
					K - ølm 900mA - CRI
LED	RAL 7021	25.00	412833-00	**1465**	4000K - 254650lm - CRI 70
			412833-0035		5700K - 254650lm - CRI 70
			412833-6035		5700K - 238100lm - CRI>80

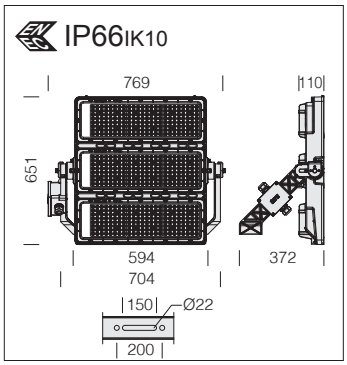

LED: power factor ≥0.92.
Luminous flux maintenance 90%: 100.000h (L90B10).
Wiring (3 module): supplied without driver, to be purchased separately (please request the suitable model from the company).

Upon request: (subcode -0034)	
LED	5700K - **CRI 90**



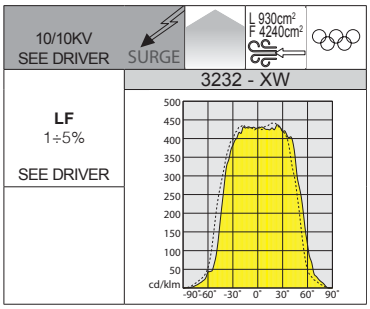

Upon request Forum 3 modules can be equipped with a **ON/OFF-DALI or DMX/RDM** driver featuring protection level **IP66** based on the type of installation.

3232 Forum 2.0 - 3 MODULES - symmetric - "XW"

		CLD S+L			LED (tj= 85 °C)
LED	colour	weight	code	W	K - ølm 700mA - CRI
LED	RAL 7021	25.00	412884-00	**1140**	4000K - 198000lm - CRI 70
					K - ølm 900mA - CRI
LED	RAL 7021	25.00	412883-00	**1465**	4000K - 254650lm - CRI 70
			412883-0035		5700K - 254650lm - CRI 70
			412883-6035		5700K - 238100lm - CRI>80

On request, Forum with 3 modules can be equipped with a driver with a protection class of IP66 depending on the type of installation.		
IP66 DRIVER characteristics (for Forum with 3 modules)		
DRIVER IP66 versions	**TYPE 6 - IP66 (ON-OFF / DALI - 3Ch max.1,8A)**	**TYPE 7 - IP66 (DMX/RDM - 3Ch max.1,8A)**
Input power	220-480VAC	220-480VAC
Power frequency	50/60Hz	50/60Hz
Power factor	0,98 (full load)	0,98 (full load)
Efficiency	95% (full load)	95% (full load)
Operating ambient temperature	-40°C ÷ +50°C	-40°C ÷ +50°C
IP protection class	IP66	IP66
Enclosure mechanical resistance	IK08	IK08
Dimming protocol	DALI2 - D4i	DMX/RDM
Flicker up to 1000Hz (Typ.)	1%	1%
LED temperature control module	Present	Present
Surge protection level	10/10kV	10/10kV
Enclosure material	Die-cast aluminium with surface coating	Die-cast aluminium with surface coating
Life expectancy	100.000h @ Tamb Max 70°C - 50.000h @ Tamb Max 80°C	100.000h @ Tamb Max 70°C - 50.000h @ Tamb Max 80°C
Certifications	CE+ENEC	CE+ENEC
Max remote distance (driver/floodlight)	300m	300m

TYPE 6 - ON-OFF/DALI

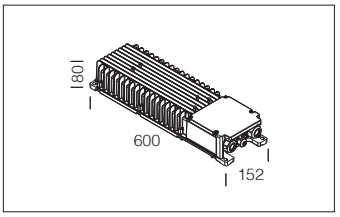

TYPE 7 - DMX/RDM

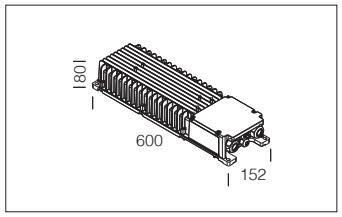

NOTE: FOR FURTHER INFORMATION AND/OR TECHNICAL SPECIFICATIONS, PLEASE CONSULT THE DISANO WEBSITE.

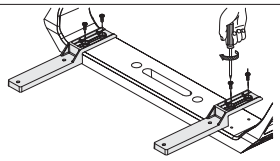

Use the support brackets acc. 198 to screw the Type 6-7v driver directly to the bracket supplied with 2/3-module Forum.



You can equip Forum with a stainless-steel flexible tube to protect the cable connecting the junction box and the LED modules.

Temperature control device
Our products are equipped with an automatic temperature control device. In the event of an unexpected temperature rise caused by anomalous weather conditions, the system will reduce the drive current, guaranteeing proper operation.



Surge protector
Every year, lighting managers are called to face the numerous damages caused by lightning and overcurrents.
To protect lighting installations from surge, i.e. the rapid increase in voltage between parts of opposite polarities and/or the ground, Disano has equipped its luminaires with an EN 61547 compliant surge protector, capable of protecting the LED module and their related driver from voltage spikes.

Switching processes/changing the load on the power line

It operates in two modes:

- differential mode: surge between power conductors, between the phase conductor to the neutral conductor. Substantially, between phase (L) and neutral (N) no substantial surges are present because voltage peaks are suppressed by other equipment connected to the power line; as a consequence a lower surge protector is sufficient.

- common mode: surge between power conductors, L/N, to the ground or the body of the luminaire if it is classified in class II (i.e. it is installed on a metal pole). Overvoltage in the common mode are generated by lightning strikes and may reach very high levels.

Guidelines for TV broadcasts with LED lighting systems

During a broadcast it is not uncommon to perceive an annoying flicker especially during slow motion. This flicker is distracting and should be eliminated where possible. The circumstances that produce the flicker vary upon the frequency modulation, voltage and camera frame rate. The table below provides a general rule of flicker factor values produced by various lighting systems. A flicker factor of less than 5% will generally not cause problems for slow motion replays at up to 150 frames per second. A lighting system with a flicker factor of less than 5% will eliminate the perceived flicker at most frame rates per second used within the sports television industry. The acceptable level of flicker factor (FF) is indicated in the Illuminance Category Tables.



Flicker Factor Reference Table

Type of Illuminance System	FF value (guide only)
Daylight	0 %
LED Luminaires: % of flicker depend upon the type of LED power supply	<3 %
Discharge lamps with high frequency ballasts	<4 %
Discharge lamps with 3-phase magnetic ballasts for uniform light	8-20 %
Discharge lamps with single-phase magnetic ballasts	30-50 %

TLCI (*Television Lighting Consistency Index*)

In addition to the CRI index, the high colour rendering version of Forum LED is ranked in terms of TLCI index in order to comply with HD television standards owing to its growing use in the television broadcasting environment.

TLCI levels greater than 90 indicate a light source suited for television use that will limit post-production time and labour costs.

TLCI LEVELS

85~100	Errors are so small that a colourist would not consider correcting them
75~85	A colourist would probably want to correct the colour performance, but could easily get an acceptable result
50~75	A colourist would certainly want to correct the errors, and could probably achieve an acceptable result, but it would take significant time to get there
25~50	The colour rendering is poor, and a good colourist would be needed to improve it, but the results would not be to broadcast standard
0~25	The colour rendering is bad, and a colourist would struggle for a long time to improve it, and even then, the results may not be acceptable for broadcast

Forum LED can be equipped with **DMX** compatible drivers. **DMX** protocol is needed for dynamic light thanks to its immediate reaction time and virtually unlimited number of addresses. **DMX** can also be used in functional dimming using simple lighting controls in high-end sport installations. **DMX** allows all range of scenic effects, as well as the monitoring of each luminaire and ease of configuration thanks to the self-addressing **DXM/RDM** functions.

Management software: the software readily enables full control of the luminous design. This new software combines absolute control with user-friendliness, providing an overview of the colour changes, duration of fading and intervals in a visible and simple way. The scenographies can be downloaded from the central system to the local units and stored in an IP65 rated box (USB compatible) which can be installed externally to provide independent control of all the functions without requiring a computer. First of all it is necessary to configure single floodlights in the management software, which will identify the floodlights based on the address they have been assigned. The system enables all the characteristics of the light to be controlled (dimming, etc...). Furthermore, the system enables single scenes to be defined, and to programme the timing interval between one scene and the next and various effects such as fading.

Controller DMX



In combination with the management software, the **MA onPC command wing** is a portable 2,048 parameter control solution that can be used in nearly any location.

- *Real-time control for 2,048 parameters in combination with management software (up to 65,536 parameters as backup in the MA system)*
- *Expandable up to 4,096 parameter*
- *2 A/B faders (100mm)*
- *1 Level-Wheel*
- *Individually backlit and dimmable silent (clickless) keys*
- *Integrated universal power supply*
- *Light, handy & rock solid*
- *Ergonomic design*
- *Just connect via USB to any PC running software*



The **dot2 core** is a compact lighting console designed for small to medium sized productions with up to 4,096 control channels.

Intuitive operation is the core of the dot2 philosophy and with a comprehensive set of connectivity hardware on all console models, the dot2 range is suitable for most theatre, touring, corporate, television and education lighting environments.

- *full programming section*
- *master playback section*
- *6 fader playbacks*
- *12 individual playback buttons*
- *Two built-in touch screens and support for one external touch screen ensure the dot2 core has the flexible hardware required for almost any kind of show.*



The **grandMA3 light** console is the top of its range. It provides the perfect combination of power and physical size. .The grandMA3 light console is suitable for the most demanding productions, making it probably the most versatile lighting console available.

- *Real-time control for up to 250,000 parameters per session in connection with grandMA3 processing units*
- *6 DMX outputs, 1 DMX input*
- *2 internal foldable monitor multi-touch screens*
- *2 internal letterbox multi-touch screens*
- *2 internal multi-touch command screens, 2 external multi-touch screens can be connected*
- *41 rotary RGB backlit encoders*
- *5 backlit dual encoders*
- *15 backlit motorized 60mm faders*
- *60 separate playbacks*
- *16 assignable x-keys*
- *integrated keyboard drawer*
- *built-in uninterruptible power supply (UPS)*
- *3 etherCON connectors, 6 USB connectors*
- *2 backlit motorized A/B faders 100mm*
- *Individually backlit and dimmable silent (clickless) keys*

SYSTEM ARCHITECTURE & COMPONENTS

FORUM: available with one, two, three LED modules, with symmetric, asymmetric and narrow light beam. The cutting-edge LED sources, with 5700K and CRI 90 colour rendering, are ideal for ensuring perfect TV images, even in HD resolution.

DRIVER DXM/RDM: to power the spotlights, in addition to controlling the light point *(ON/OFF, luminous flux dimming, etc.).*

DXM/RDM CONTROLLER: to control the DMX interface *(save light scenes and internal timers, ON/OFF/dimming/animation control).*

SOFTWARE: the console displayed on the monitor, allows the full control of the different spotlights, easily handling the desired light effects



GENERAL CHARACTERISTICS

Housing: complete with aluminium frame with die-cast aluminium end caps.

Diffuser: 8 mm clear and tempered glass, resistant to thermal shock (UNI-EN 12150-1 : 2001).

Optics: system made in high performance PMMA, resistant to high temperatures and UV radiation. Flux recovery system in polycarbonate.

Coating: the fully automated powder-coating cycle involves a polyester-based, salt-spray corrosion-resistant and UV-stabilised paint.

Upon request: protective coating recommended for marine environments within 5 km of the sea.

Equipment: complete with electrical cable (0,5mt) for mains connection.

RGBW DMX RDM

Sicura is also available in the RGBW - DMX/RDM version (see chapter *Lighting management systems - DMX solution for LED RGBW*).



SYMMETRIC BEAM

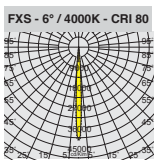

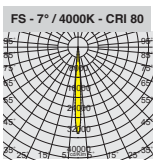

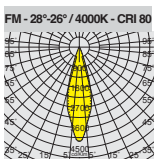

ASYMMETRIC BEAM

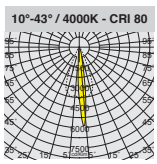

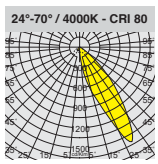

ELLIPTIC BEAM

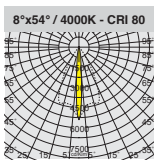

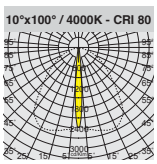

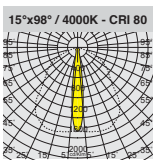

Upon request, it is possible to order SICURA with optics having photometric distributions that allow considerable design flexibility. Available with different SYMMETRIC, ASYMMETRIC or ELLIPTICAL beam angles, these fixtures are ideal for architectonic lighting applications.

INSTALLATION AND ACCESSORIES

acc. 535 adjustable connection	
grey	993970-00
For direct ceiling installation. Capacity: 6 Kg. **2 for pack.**	

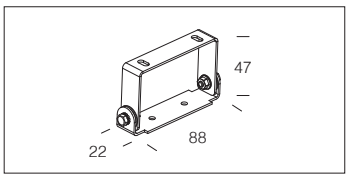

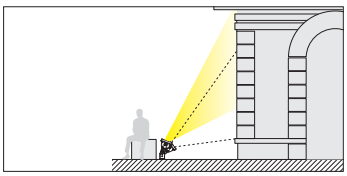

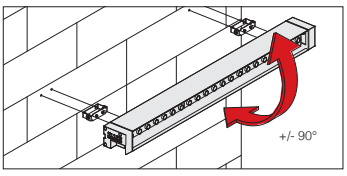

acc. 536 bracket	
grey	993972-00
To install Sicura permanently on walls. **2 for pack.**	

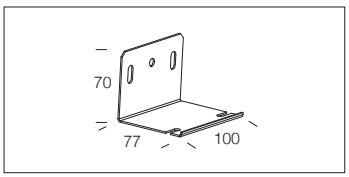

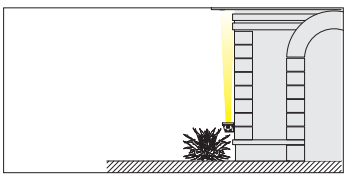

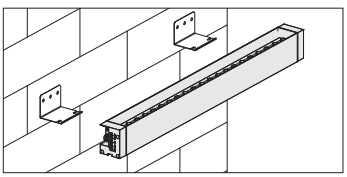

acc. 376 ceiling moun. unit	
galvanized	145151-00
For direct ceiling installation. Only for equipment with direct light. **2 for pack.**	

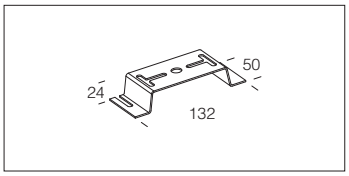

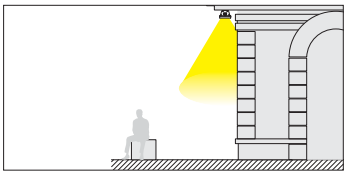

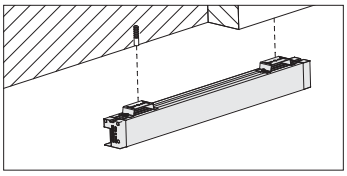

acc. 537 adjustable connection	
galvanized	993974-00
To install Sicura on walls or ceiling. To be used for continuous lines. **2 for pack.**	

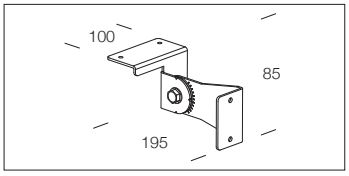

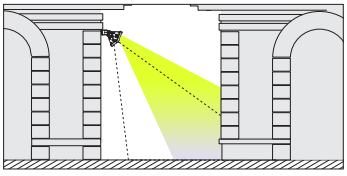

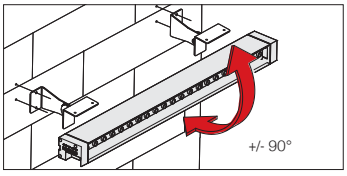

acc. 339 connector
993836-00
To be used for mains connection.

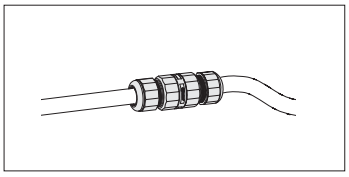

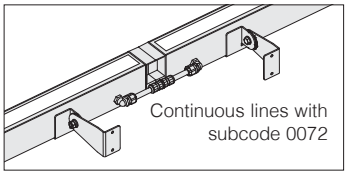

On request: continuous line alignment supplied with **sub-code 0072** (with surcharge).

RG0 +40 C° -30 U.V. LOW FLICKER 3000K 4000K

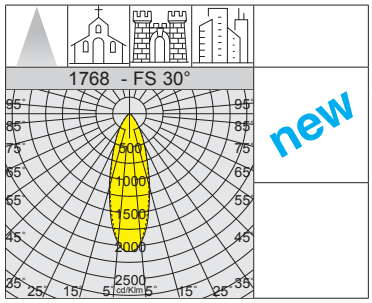

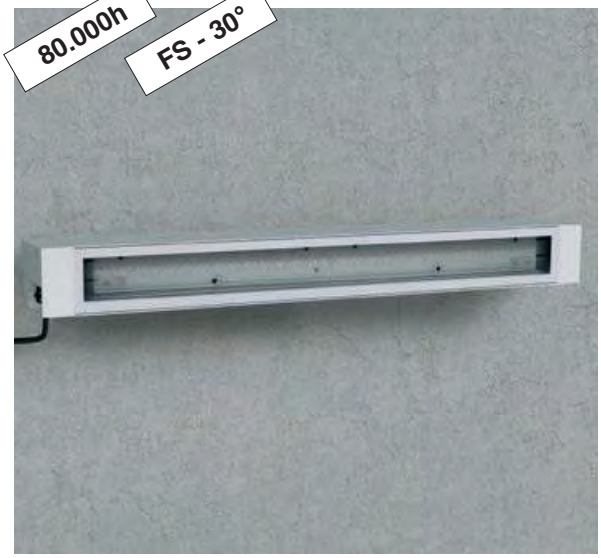

IP66 IK08

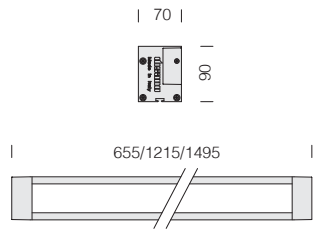

LED: luminous flux maintenance 80%: 80.000h (L80B20).
Power factor ≥0.9

1768 Sicura FS - symmetric

			CLD			LUMEN OUTPUT (tq= 25 °C)
LED	colour	L	weight	code	W tot	K - ølm - CRI - degrees
LED	grey	655	2.90	414242-00	**22**	4000K - **3285lm** - CRI>80 - 30°
				414242-39		3000K - **3121lm** - CRI>80 - 30°
LED	grey	1215	5.50	414243-00	**43**	4000K - **6570lm** - CRI>80 - 30°
				414243-39		3000K - **6242lm** - CRI>80 - 30°
LED	grey	1495	6.60	414244-00	**54**	4000K - **8212lm** - CRI>80 - 30°
				414244-39		3000K - **7801lm** - CRI>80 - 30°

RG0 +40 C° -30 U.V. LOW FLICKER 3000K 4000K

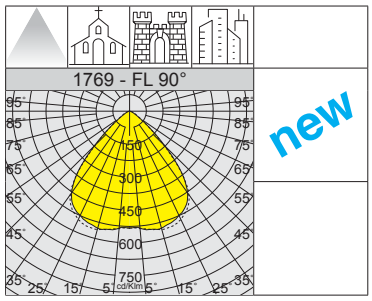

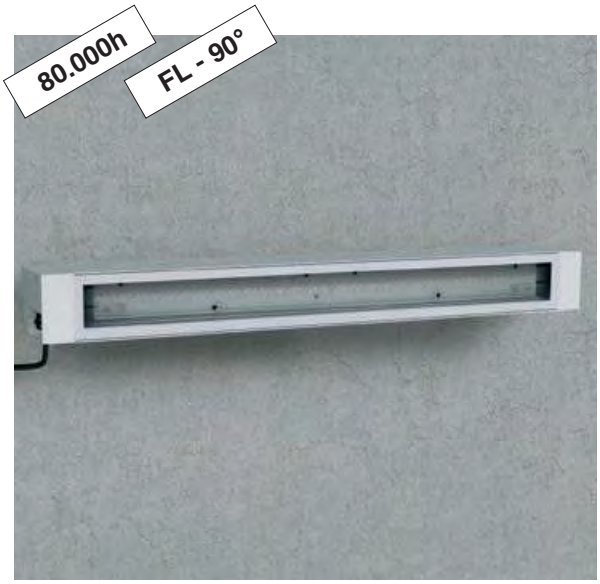

IP66 IK08

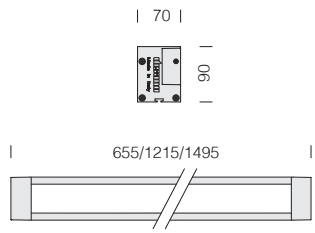

LED: luminous flux maintenance 80%: 80.000h (L80B20).
Power factor ≥0.9

1769 Sicura FL - symmetric

			CLD			LUMEN OUTPUT (tq= 25 °C)
LED	colour	L	weight	code	W tot	K - ølm - CRI - degrees
LED	grey	655	2.90	414262-00	**22**	4000K - **3152lm** - CRI>80 - 90°
				414262-39		3000K - **2994lm** - CRI>80 - 90°
LED	grey	1215	5.50	414263-00	**43**	4000K - **6303lm** - CRI>80 - 90°
				414263-39		3000K - **5988lm** - CRI>80 - 90°
LED	grey	1495	6.60	414264-00	**54**	4000K - **7879lm** - CRI>80 - 90°
				414264-39		3000K - **7485lm** - CRI>80 - 90°

IP66IK08

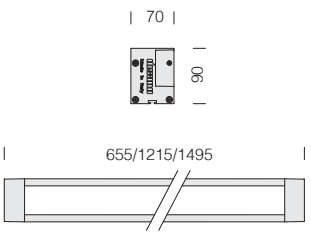

LED: luminous flux maintenance 80%: 80.000h (L80B20).
Power factor ≥0.9

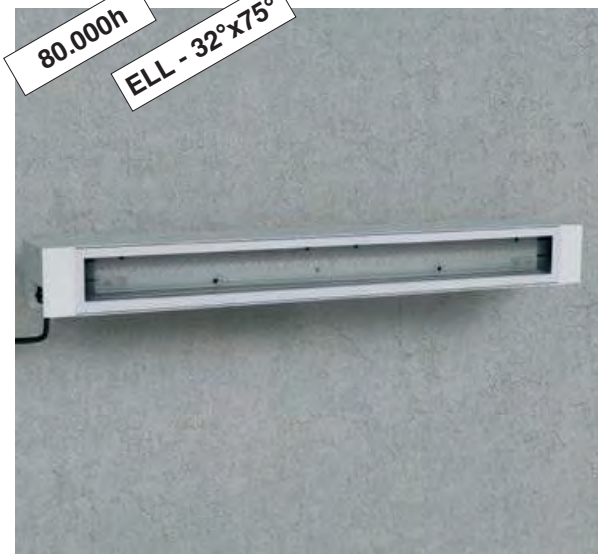

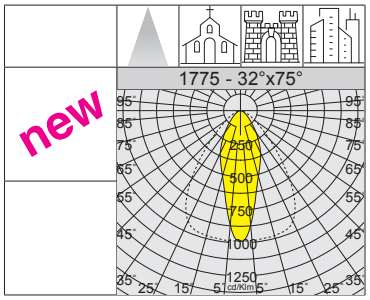

RGO · +40 C° -30 · U.V. · LOW FLICKER · 3000K · 4000K

1775 Sicura - 32°x75° elliptic

			CLD			LUMEN OUTPUT (tq= 25 °C)
LED	colour	L	weight	code	W tot	K - ølm - CRI
LED	grey	655	2.90	414217-00	22	4000K - **2992lm** - CRI>80
				414217-39		3000K - **2842lm** - CRI>80
LED	grey	1215	5.50	414218-00	43	4000K - **5964lm** - CRI>80
				414218-39		3000K - **5666lm** - CRI>80
LED	grey	1495	6.60	414219-00	54	4000K - **7455lm** - CRI>80
				414219-39		3000K - **7082lm** - CRI>80

IP66IK08

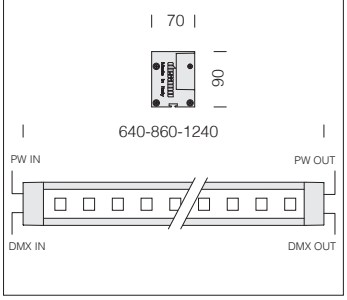

For DMX management of the luminaire, see the section about DMX controllers and accessories (*chapter Lighting management systems - DMX solution for LED RGBW).*



SICURA - RGBW - DMX/RDM (on request)	
TW (on request)	2700K - 3000K - 4000K - 5000K
Version	RGBW - TUNABLE WHITE
Standard beam	elliptic - narrow - medium - wide - asymm.

ELECTRICAL DRIVE CHARACTERISTICS	
Electrical connect.	loop in-out
Equipment	DMX/RDM or stand-alone



RGO · +40 C° -20 · U.V. · LOW FLICKER · RGBW DMX RDM

Sicura - LED RGBW DMX/RDM

	CLD DMX								
LED	WHITE 4000K		RED		GREEN		BLUE		W tot
	ølm	w	ølm	w	ølm	w	ølm	w	
SICURA RGBW 600	1300lm	13W	260lm	12W	760lm	12W	33lm	13W	50W
SICURA RGBW 800	1740lm	17W	360lm	16W	1010lm	16W	450lm	17W	66W
SICURA RGBW 1200	2600lm	26W	520lm	24W	1520lm	24W	670lm	26W	100W

Upon request: DMX start address 1 (1=RED 2=GREEN 3=BLUE 4=WHITE)
- Without DMX signal (loss of signal or upon start-up): functions at 100% WHITE with no light shows
- With DMX signal: stage light effects sent from the central control unit

Upon request:
1) Custom DMX addressing
2) STAND ALONE colour selection (Red, Green, Blue, White or any other colour such as Orange, Pink, Light Blue, Purple, etc.)
3) DMX PERSONALITY setting: in case of loss of DMX signal, the fixture will set itself to a random colour, which can be either the same or different from the STAND ALONE colour (to be specified upon ordering)





GENERAL CHARACTERISTICS

The **Tunnel LED** range consists of luminaires with precision optics that allow great design flexibility and ensure high light distribution, which must be optimised in installation sites such as underpasses.

Tunnel LED was designed according to three fundamental elements of pedestrian underpass lighting:

EASY AND QUICK INSTALLATION

LITTLE MAINTENANCE

COMPLIANCE WITH SAFETY STANDARDS

OTHER CHARACTERISTICS

Housing: in die-cast aluminium with cooling fins.

Diffuser: tempered glass, 4 mm thick, resistant to thermal shock and impacts (UNI-EN 12150-1 : 2001).

Optics: combined optical system made in high performance polycarbonate, resistant to high temperatures and UV radiation.

Coating: the fully automated powder-coating cycle involves a polyester-based, salt-spray corrosion-resistant and UV-stabilised paint.

Standard Supply: complete with galvanised and coated bracket, external screws and bolts in stainless steel; air recirculation valve; with dedicated electronic device to protect the LED module.

OTHER INFORMATION

SURGE

Electronic safety device to protect the LED module and the related ballast compliant with EN 61547.
It works in two modes:
- differential mode: surge between power cables and between the phase and neutral.
- common mode: surge between power, L/N and ground cables or between the fixture's body if it is installed on a metal pole.

The fixture's design is configured to minimise wind exposure surfaces:
art. 3300 = L:250cm² F:490cm²
art. 3301 = L:280cm² F:730cm²





UPON REQUEST

Possibility of centralized lighting point control or via **external** presence/lighting sensors (see chapter *Lighting management systems and recommendations*).

Upon request: 2-module version available.



IP66IK10

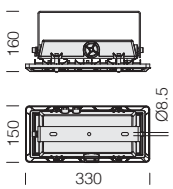

LED: luminous flux maintenance 80%: 100.000h (L80B20).
Power factor ≥0.9

100.000h



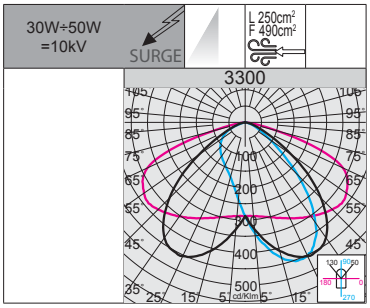

RG0 Ethr
+50 C° -40
U.V.
LOW FLICKER

3300 Tunnel LED					
		CLD			LUMEN OUTPUT (tq= 25 °C)
LED	colour	weight	code	W tot	K - ølm - CRI
LED	RAL 9005	3.00	330305-00	**30**	4000K - 4650lm - CRI>70
			330306-00	**50**	4000K - 7000lm - CRI>70

IP66IK10

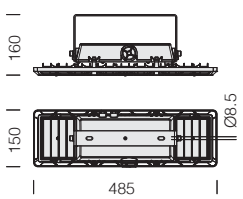

LED: luminous flux maintenance 80%: 100.000h (L80B20).
Power factor ≥0.9

100.000h



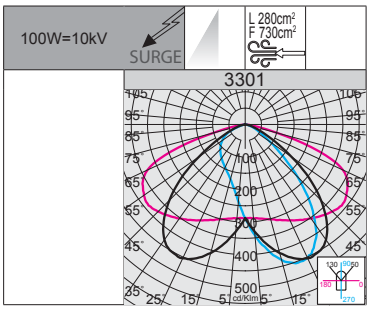

RG0 Ethr
+50 C° -40
U.V.
LOW FLICKER

3301 Tunnel LED					
		CLD			LUMEN OUTPUT (tq= 25 °C)
LED	colour	weight	code	W tot	K - ølm - CRI
LED	RAL 9005	3.60	330307-00	**100**	4000K - 15500lm - CRI>70

Upon request, it is possible to order Tunnel LED with optics having photometric distributions that allow considerable design flexibility.

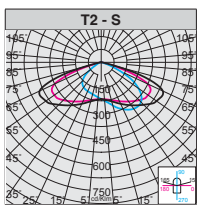

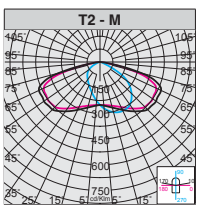

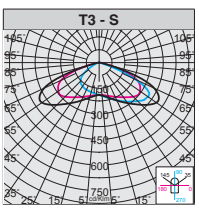

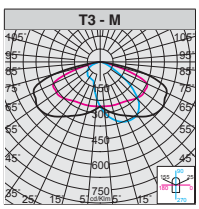

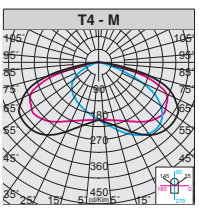

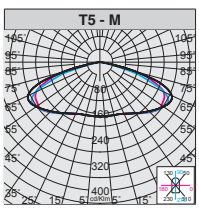



TOWER



EXPO



PORTOFINO



FARO



Tower p. 320
Expo p. 322
Portofino p. 324
Faro p. 332

BITTA



AMALFI - GLOBO



SQUARE



UPRIGHT - PLANE



Bitta p. 338
Amalfi p. 340
Globo p. 341
Square p. 342
Upright p. 344
Plane p. 345

BRICK



HORIZONTAL - SWINGING



MUSA - CLESSIDRA



CILINDRO - MERIDIANA



Brick p. 346
Horizontal p. 348
Swinging p. 349
Musa p. 350
Clessidra p. 351
Cilindro / Meridiana p. 352

VEGA



GREEN - GARDEN



RUGBY - COMETA



KOALA



Vega p. 353
New Vega p. 354
Green / Garden p. 355
Rugby p. 356
Cometa p. 357
Koala Big - DIP SWITCH p. 358
Koala p. 359

SQUARE ADJUSTABLE



PODIO



ELFO



DAFNE



Square p. 360
Podio - DIP SWITCH p. 362
Elfo - DIP SWITCH p. 366
Dafne p. 370

STARLED



MICROFLOOR - MIDIFLOOR

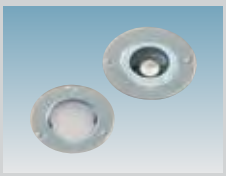

MINIFLOOR



FLOOR



Starled p. 371
Microfloor p. 372
Midifloor p. 376
Minifloor p. 377
Floor p. 378

POCKET

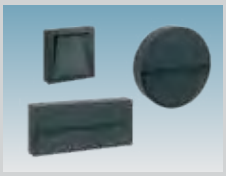

POCKET



BOX



BOX



Pocket p. 382
Box p. 388

STARLED

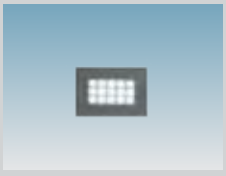

SPY



SICURA



MINIQUADRO



Starled p. 392
Spy p. 393
Sicura p. 394
Miniquadro p. 396


P

GENERAL CHARACTERISTICS

Housing/Column/Base: made of steel.

Diffuser: tempered glass, 4 mm thick, resistant to thermal shocks and impacts.

Coating: the fully automated powder-coating cycle involves a polyester-based, salt-spray corrosion-resistant and UV-stabilised paint.



Upon request: protective coating recommended for marine environments within 5 km of the sea.

LED: power factor >0,9.
Luminous flux maintenance 90%: 50.000h (L90B10).

OTHER CHARACTERISTICS

Complete with waterproof connector for line connection. Easy and quick to install.

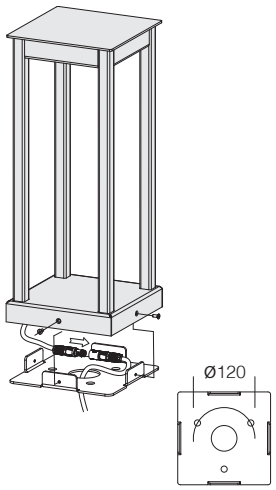

OTHER INFORMATION

Installation example

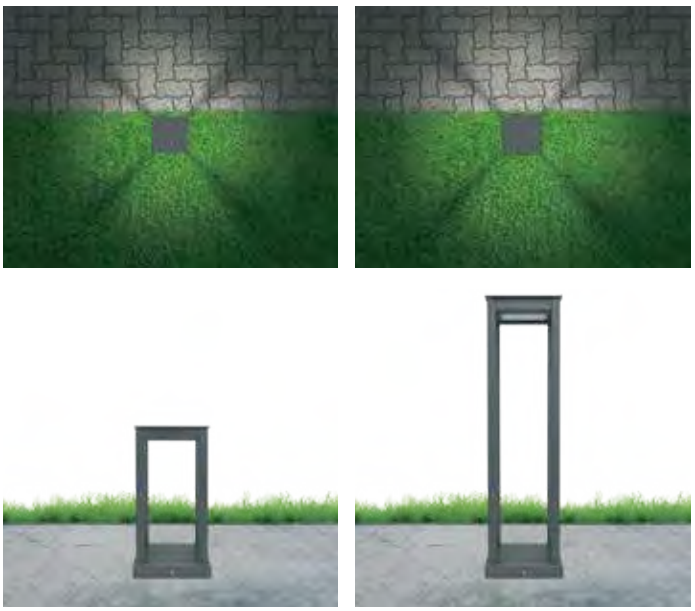

IP65IK09

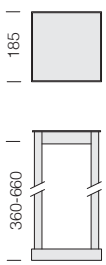



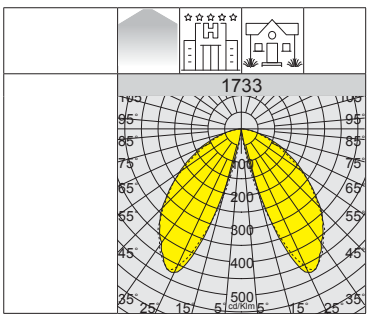

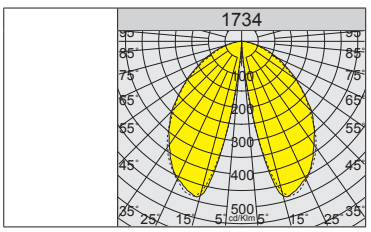

RG0

U.V.

3000K

4000K

1733 Tower - short version

			CLD			LUMEN OUTPUT (tq= 25 °C)
LED	colour	h	weight	code	W tot	K - ølm - CRI
LED	graphite	**360**	3.40	511135-00	**20**	4000K - 1913lm - CRI 80
				511135-39		3000K - 1817lm - CRI 80



1734 Tower - tall version

			CLD			LUMEN OUTPUT (tq= 25 °C)
LED	colour	h	weight	code	W tot	K - ølm - CRI
LED	graphite	**660**	4.30	511136-00	**20**	4000K - 1729lm - CRI 80
				511136-39		3000K - 1643lm - CRI 80



GENERAL CHARACTERISTICS

Optical compartment housing: in die-cast aluminium.

Column: in extruded aluminium.

Base: in die-cast aluminium with internal reinforcement ribs.

Diffuser: wide-beam, in opal methacrylate with internal micro-prismatic surface.

Coating: the fully automated powder-coating cycle involves a polyester-based, salt-spray corrosion-resistant and UV-stabilised paint.

Upon request: protective coating recommended for marine environments within 5 km of the sea.

LED: power factor >0,9.
Luminous flux maintenance 90%: 50.000h (L90B10).
Luminous flux maintenance 70%: 100.000h (L70B50).

OTHER CHARACTERISTICS

Complete with waterproof connector for line connection. Easy and quick to install.

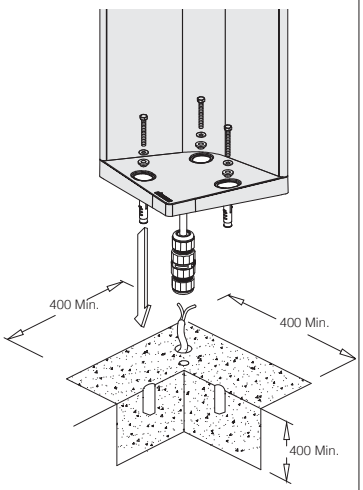

OTHER INFORMATION

Installation example

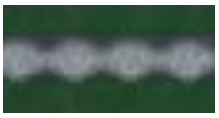

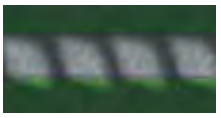


IP66 IK09

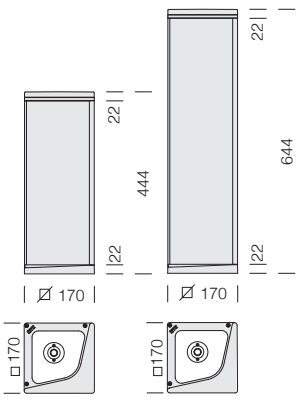



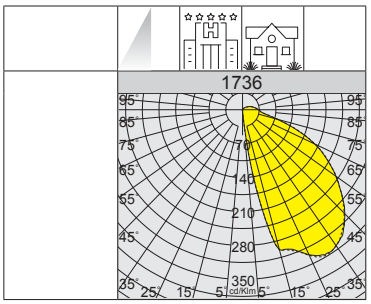

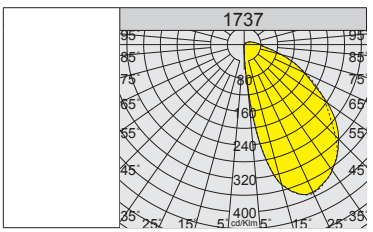

RG0

U.V.

3000K

4000K

1736 Expo - short version						
			CLD			LUMEN OUTPUT (tq= 25 °C)
LED	colour	h	weight	code	W tot	K - ølm - CRI
COB	graphite	**444**	3.40	511121-00	**10**	4000K - 710lm - CRI 80
				511121-39		3000K - 675lm - CRI 80

1737 Expo - tipo alto						
			CLD			LUMEN OUTPUT (tq= 25 °C)
LED	colour	h	weight	code	W tot	K - ølm - CRI
COB	graphite	**644**	4.30	511124-00	**15**	4000K - 960lm - CRI 80
				511124-39		3000K - 913lm - CRI 80



GENERAL CHARACTERISTICS

Housing and cone: in die-cast aluminium.

Column: in extruded aluminium, cylindrical section.

Base column: in die-cast aluminium with internal reinforcement ribs.

Diffuser: in vandal-resistant V2 self-extinguishing polycarbonate, UV-stabilized.

Coating: the fully automated powder-coating cycle involves a polyester-based, salt-spray corrosion-resistant and UV-stabilised paint.

Upon request: protective coating recommended for marine environments within 5 km of the sea.

Equipment: complete with waterproof connector for line connection. Easy and quick to install.

LED: power factor ≥0,9.
Luminous flux maintenance 90%: 50.000h (L90B10)

OTHER CHARACTERISTICS

Wall versions: complete with plate for wall-mounting and waterproof connector for line connection.

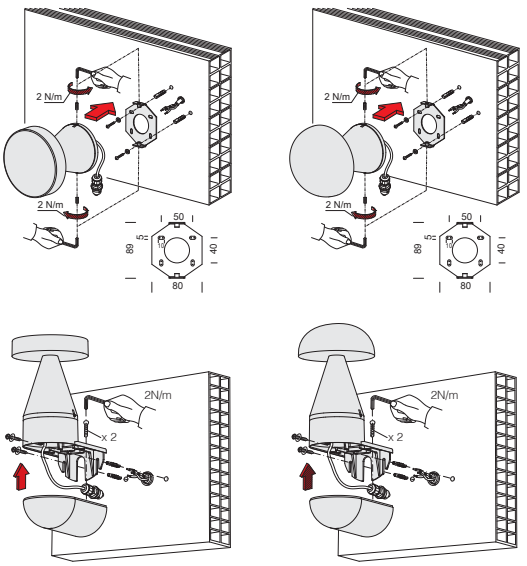

Floor versions: complete with base for floor-mounting and waterproof connector for line connection.

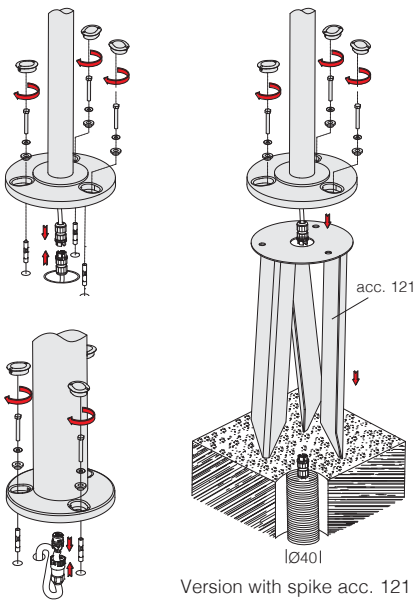

Version with spike acc. 121



art. 1866 art. 1867 art. 1864 art. 1865 art. 1868 art. 1869



art. 1874 art. 1875 art. 1876 art. 1878 art. 1879 art. 1880



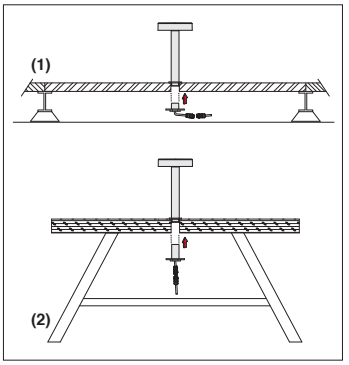

Upon request: Portofino slim with special connector, ideal for installation on floating floors (1) or to allow use as a table lamp (2).

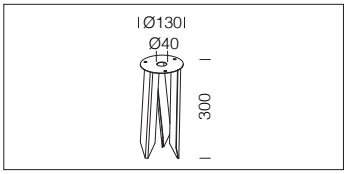

acc. 121 spike	
inox	99133500002264
In stainless steel. For planting Portofino short verson into the ground.	

RG0

U.V.

3000K

4000K

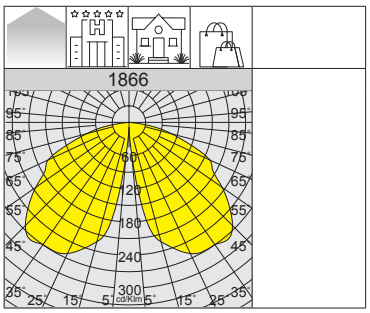

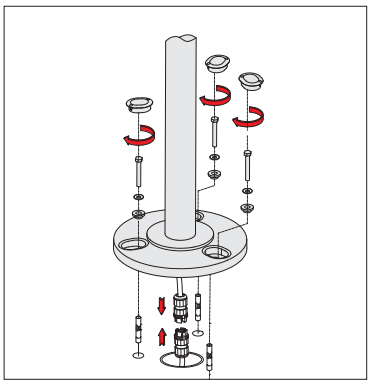





IP65IK08

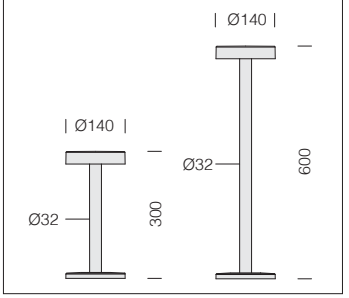

LED: power factor ≥0,9.
Luminous flux maintenance 90%: 50.000h (L90B10)

1866 Portofino slim - short version					
		CLD			LUMEN OUTPUT (tq= 25 °C)
230V	colour	weight	code	W tot	K - ølm (230V) - CRI
LED	graphite	1.00	511142-00	10	4000K - 801lm - CRI>80
			511142-39		3000K - 761lm - CRI>80

1867 Portofino slim - medium version					
		CLD			LUMEN OUTPUT (tq= 25 °C)
230V	colour	weight	code	W tot	K - ølm (230V) - CRI
LED	graphite	1.20	511152-00	10	4000K - 801lm - CRI>80
			511152-39		3000K - 761lm - CRI>80

IP65IK08

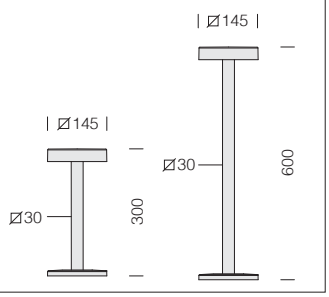

LED: power factor ≥0,9.
Luminous flux maintenance 90%: 50.000h (L90B10)



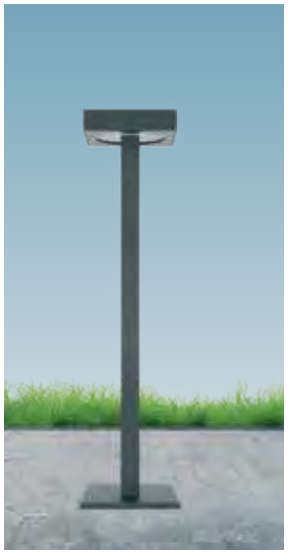

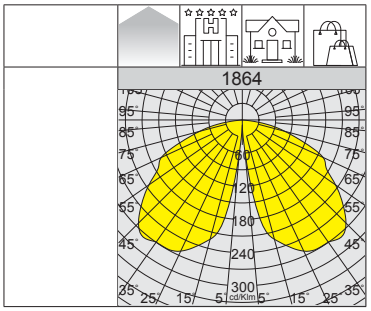



RAL 9003 white versions, upon request.

1864 Portofino Q slim - short version

		CLD			LUMEN OUTPUT (tq= 25 °C)
230V	colour	weight	code	W tot	K - ølm (230V) - CRI
LED	graphite	1.00	511145-00	**10**	4000K - 801lm - CRI>80
	chrome		511147-00		

1865 Portofino Q slim - medium version

		CLD			LUMEN OUTPUT (tq= 25 °C)
230V	colour	weight	code	W tot	K - ølm (230V) - CRI
LED	graphite	1.10	511156-00	**10**	4000K - 801lm - CRI>80
	chrome		511157-00		

IP65IK08

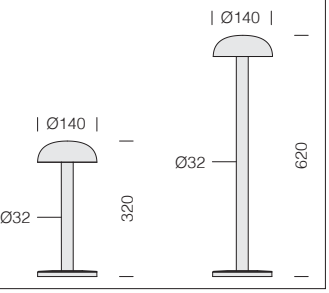

LED: power factor ≥0,9.
Luminous flux maintenance 90%: 50.000h (L90B10)





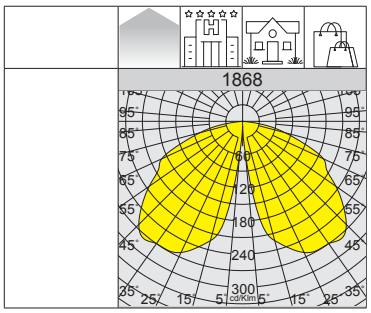

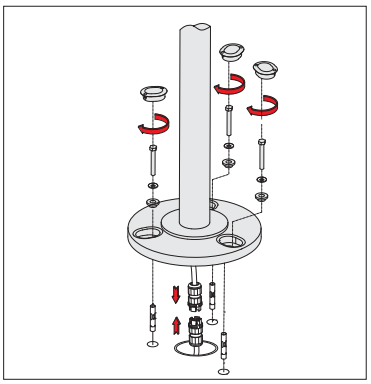

1868 Portofino slim - short version

		CLD			LUMEN OUTPUT (tq= 25 °C)
230V	colour	weight	code	W tot	K - ølm (230V) - CRI
LED	graphite	1.00	511182-00	**10**	4000K - 801lm - CRI>80
			511182-39		3000K - 761lm - CRI>80

1869 Portofino slim - medium version

		CLD			LUMEN OUTPUT (tq= 25 °C)
230V	colour	weight	code	W tot	K - ølm (230V) - CRI
LED	graphite	1.10	511192-00	**10**	4000K - 801lm - CRI>80
			511192-39		3000K - 761lm - CRI>80

RG0

U.V.

3000K

4000K

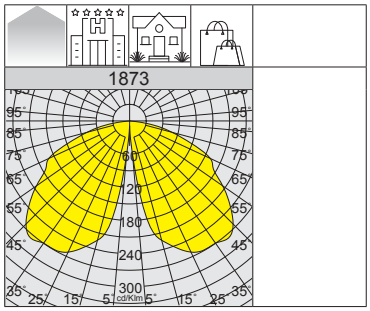

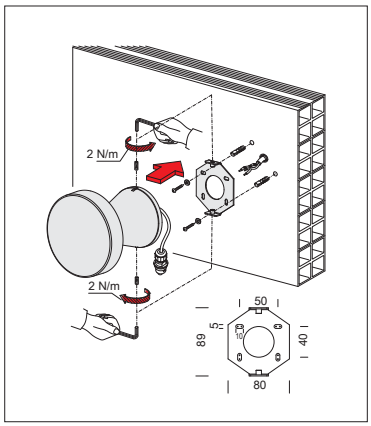

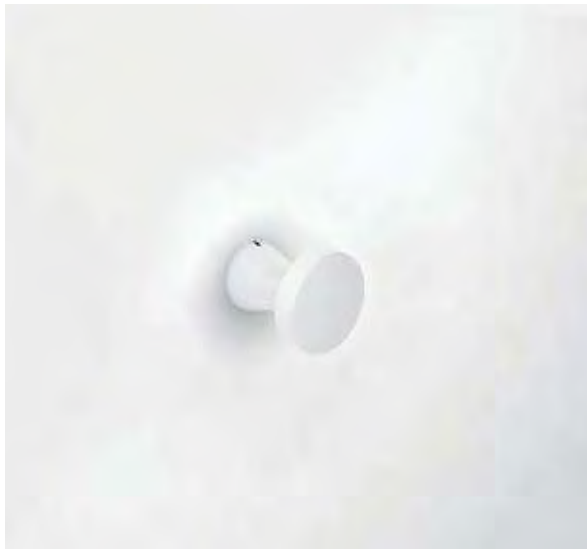

IP65IK08

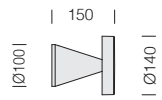

LED: power factor ≥0,9.
Luminous flux maintenance 90%: 50.000h (L90B10)

1873 Portofino - wall version

		CLD			LUMEN OUTPUT (tq= 25 °C)
230V	colour	weight	code	W tot	K - ølm (230V) - CRI
LED	graphite	0.80	511160-00	**10**	4000K - 801lm - CRI>80
			511160-39		3000K - 761lm - CRI>80
LED	white	0.80	511161-00	**10**	4000K - 801lm - CRI>80
			511161-39		3000K - 761lm - CRI>80

RG0

U.V.

3000K

4000K

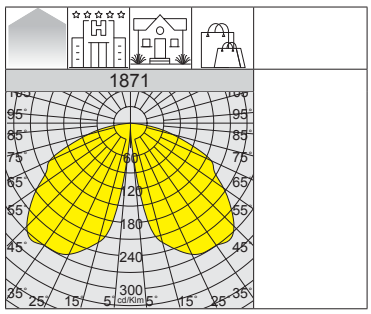

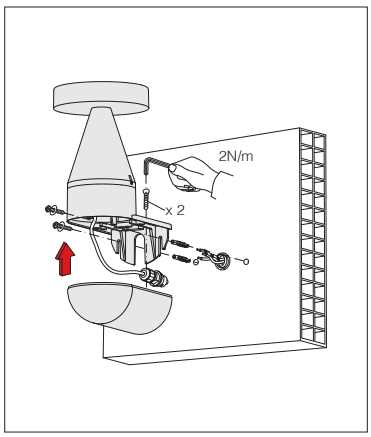



IP65IK08

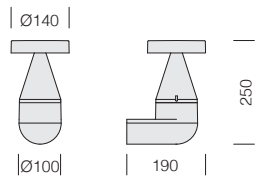

LED: power factor ≥0,9.
Luminous flux maintenance 90%: 50.000h (L90B10)

1871 Portofino - wall version

		CLD			LUMEN OUTPUT (tq= 25 °C)
230V	colour	weight	code	W tot	K - ølm (230V) - CRI
LED	graphite	1.30	511165-00	**10**	4000K - 801lm - CRI>80
			511165-39		3000K - 761lm - CRI>80
LED	white	1.30	511166-00	**10**	4000K - 801lm - CRI>80
			511166-39		3000K - 761lm - CRI>80

IP65IK08

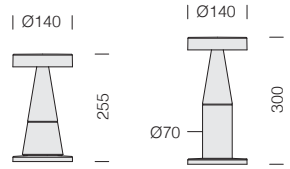





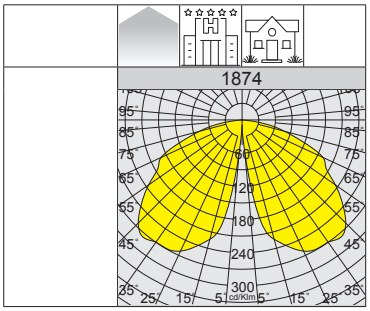

RGO

U.V.

3000K

4000K

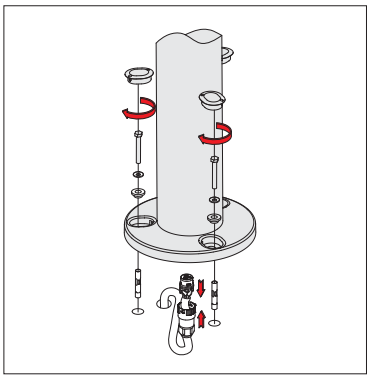

LED: power factor ≥0,9.
Luminous flux maintenance 90%: 50.000h (L90B10)

1881 Portofino - short version

		CLD			LUMEN OUTPUT (tq= 25 °C)
230V	colour	weight	code	W tot	K - ølm (230V) - CRI
LED	graphite	1.20	511141-00	**10**	4000K - 801lm - CRI>80
			511141-39		3000K - 761lm - CRI>80

1874 Portofino - short version

		CLD			LUMEN OUTPUT (tq= 25 °C)
230V	colour	weight	code	W tot	K - ølm (230V) - CRI
LED	graphite	1.20	511140-00	**10**	4000K - 801lm - CRI>80
			511140-39		3000K - 761lm - CRI>80

IP65IK08

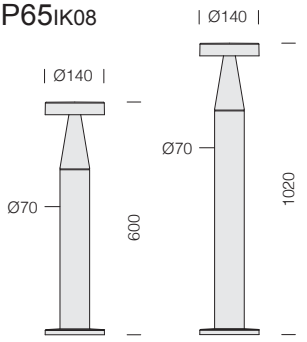



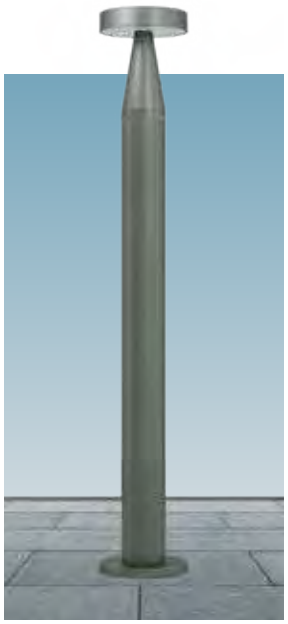

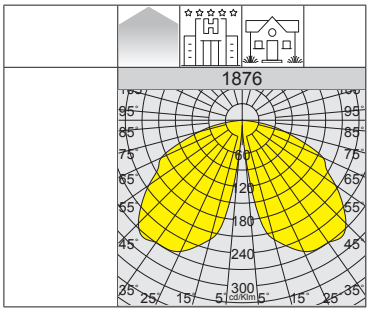

RGO

U.V.

3000K

4000K

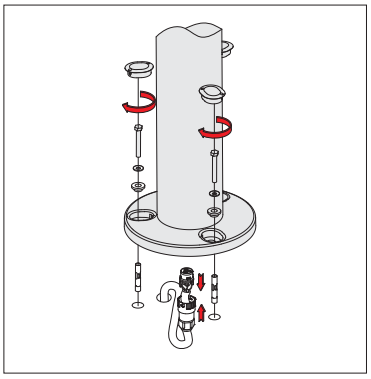

LED: power factor ≥0,9.
Luminous flux maintenance 90%: 50.000h (L90B10)

1875 Portofino - medium version

		CLD			LUMEN OUTPUT (tq= 25 °C)
230V	colour	weight	code	W tot	K - ølm (230V) - CRI
LED	graphite	1.60	511150-00	**10**	4000K - 801lm - CRI>80
			511150-39		3000K - 761lm - CRI>80

1876 Portofino - tall version

		CLD			LUMEN OUTPUT (tq= 25 °C)
230V	colour	weight	code	W tot	K - ølm (230V) - CRI
LED	graphite	2.50	511155-00	**18**	4000K - 1360lm - CRI>80
			511155-39		3000K - 1292lm - CRI>80

RG0 U.V. 3000K 4000K

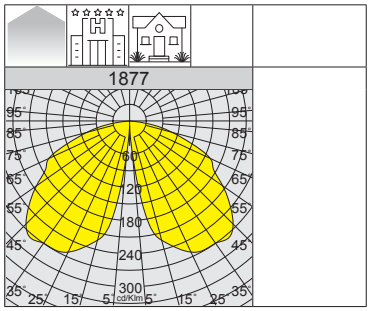

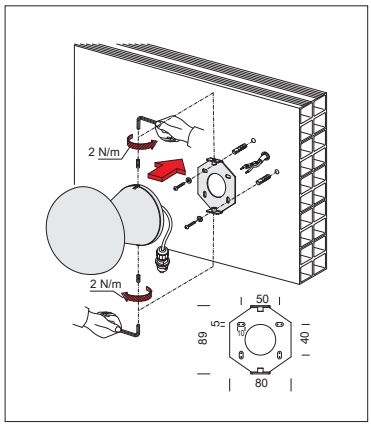

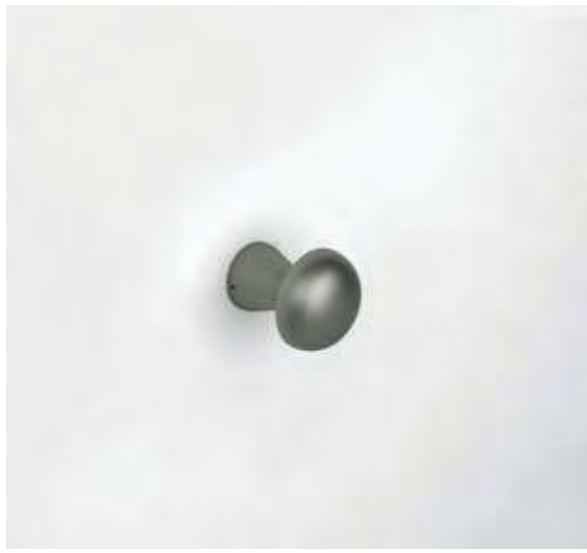

IP65 IK08

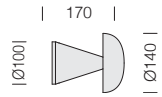

LED: power factor ≥0,9.
Luminous flux maintenance 90%: 50.000h (L90B10)

1877 Portofino - wall version

		CLD			LUMEN OUTPUT (tq= 25 °C)
230V	colour	weight	code	W tot	K - ølm (230V) - CRI
LED	graphite	0.90	511170-00	**10**	4000K - 801lm - CRI>80
			511170-39		3000K - 761lm - CRI>80
LED	white	0.90	511171-00	**10**	4000K - 801lm - CRI>80
			511171-39		3000K - 761lm - CRI>80

RG0 U.V. 3000K 4000K

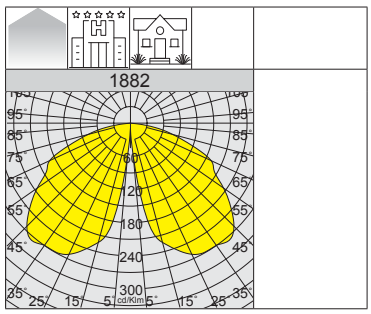

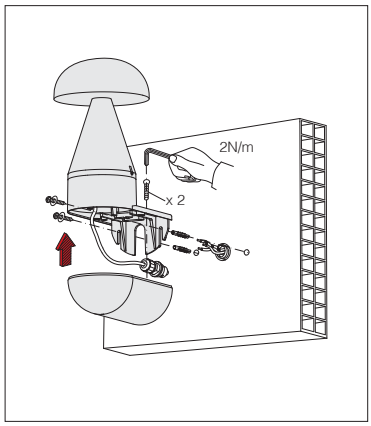



IP65 IK08

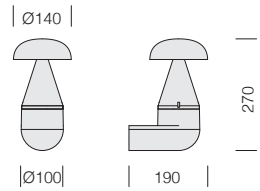

LED: power factor ≥0,9.
Luminous flux maintenance 90%: 50.000h (L90B10)

1882 Portofino - wall version

		CLD			LUMEN OUTPUT (tq= 25 °C)
230V	colour	weight	code	W tot	K - ølm (230V) - CRI
LED	graphite	1.40	511175-00	**10**	4000K - 801lm - CRI>80
			511175-39		3000K - 761lm - CRI>80
LED	white	1.40	511176-00	**10**	4000K - 801lm - CRI>80
			511176-39		3000K - 761lm - CRI>80

IP65IK08

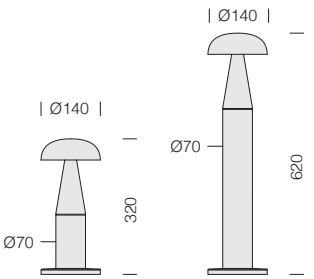

LED: power factor ≥0,9.
Luminous flux maintenance 90%: 50.000h (L90B10)





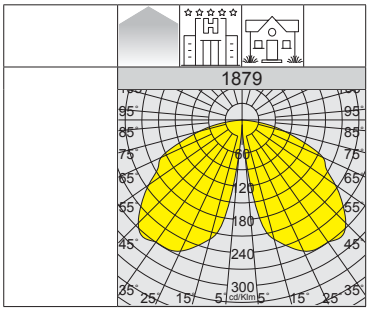



RG0
U.V.
3000K
4000K

1878 Portofino - short version

		CLD			LUMEN OUTPUT (tq= 25 °C)
230V	colour	weight	code	W tot	K - ølm (230V) - CRI
LED	graphite	1.30	511180-00	**10**	4000K - 801lm - CRI>80
			511180-39		3000K - 761lm - CRI>80

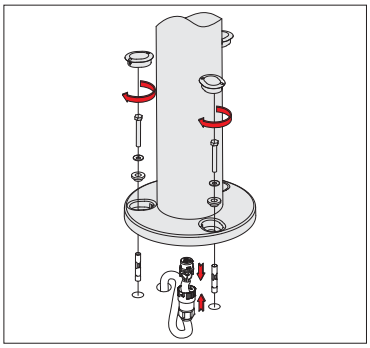

1879 Portofino - medium version

		CLD			LUMEN OUTPUT (tq= 25 °C)
230V	colour	weight	code	W tot	K - ølm (230V) - CRI
LED	graphite	1.70	511190-00	**10**	4000K - 801lm - CRI>80
			511190-39		3000K - 761lm - CRI>80

IP65IK08

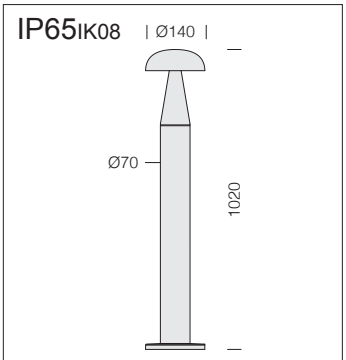

LED: power factor ≥0,9.
Luminous flux maintenance 90%: 50.000h (L90B10)



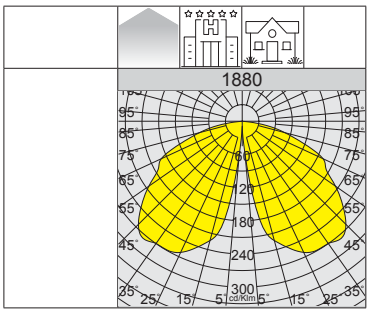

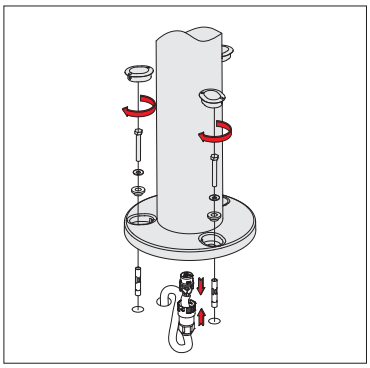

RG0
U.V.
3000K
4000K

1880 Portofino - tall version

		CLD			LUMEN OUTPUT (tq= 25 °C)
230V	colour	weight	code	W tot	K - ølm (230V) - CRI
LED	graphite	2.50	511195-00	**18**	4000K - 1360lm - CRI>80
			511195-39		3000K - 1292lm - CRI>80



GENERAL CHARACTERISTICS

Housing: in extruded aluminium, cylindrical section.

Cap: made of die-cast aluminium.

Diffuser: in polycarbonate, clear vandal resistant and V2 self-extinguishing, UV-stabilised.

Coating: the fully automated powder-coating cycle involves a polyester-based, salt-spray corrosion-resistant and UV-stabilised paint.

Upon request: protective coating recommended for marine environments within 5 km of the sea.

OTHER CHARACTERISTICS

Complete wit base and anchor bolts to bury. Supplied with waterproof connector for quick installation and air recycle valve.

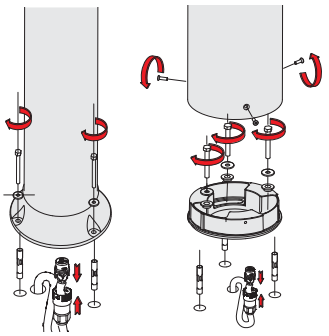



art. 1238 **art. 1232**

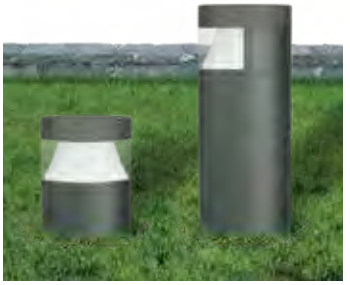

art. 1793 **art. 1794**



art. 1799



art. 1533



art. 1239 **art. 1230**



art. 1797 **art. 1795**



art. 1798



art. 1531

IP66IK10

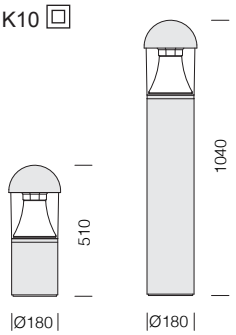

LED: power factor ≥0,9.
Luminous flux maintenance 90%: 50.000h (L90B10)





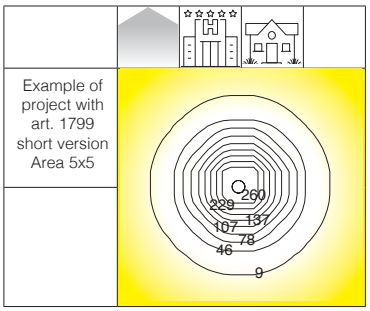

Upon request: optical group replacement to be ordered with subcode -0017.

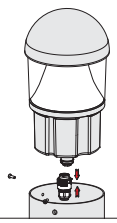

RG0 U.V. 3000K 4000K

1238 Faro - short version

		CLD			LUMEN OUTPUT (tq= 25 °C)
LED	colour	weight	code	W tot	K - ølm - CRI
LED	graphite	3.90	510600-00	**9**	4000K - 1050lm - CRI>80
			510600-39		3000K - 998lm - CRI>80

1239 Faro - tall version

		CLD			LUMEN OUTPUT (tq= 25 °C)
LED	colour	weight	code	W tot	K - ølm - CRI
LED	graphite	5.90	510610-00	**9**	4000K - 1050lm - CRI>80
			510610-39		3000K - 998lm - CRI>80

IP66IK10

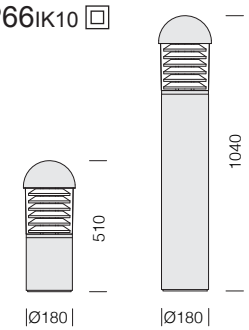

LED: power factor ≥0,9.
Luminous flux maintenance 90%: 50.000h (L90B10)





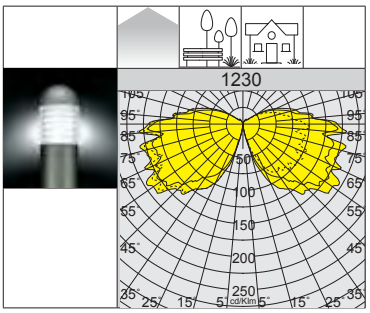

Upon request: optical group replacement to be ordered with subcode -0017.

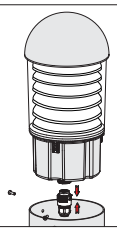

RG0 U.V. 3000K 4000K

1232 Faro - short version

		CLD			LUMEN OUTPUT (tq= 25 °C)
LED	colour	weight	code	W tot	K - ølm - CRI
LED	graphite	3.90	510006-00	**13**	4000K - 813lm - CRI>80
			510006-39		3000K - 772lm - CRI>80

1230 Faro - tipo alto

		CLD			LUMEN OUTPUT (tq= 25 °C)
LED	colour	weight	code	W tot	K - ølm - CRI
LED	graphite	5.90	510005-00	**13**	4000K - 813lm - CRI>80
			510005-39		3000K - 772lm - CRI>80

RG0

U.V.

3000K

4000K

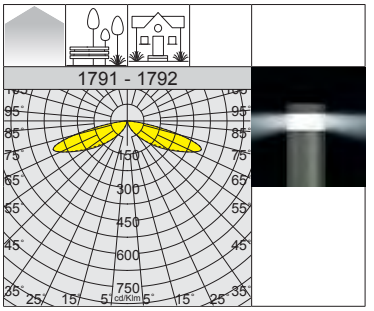

Upon request: optical group replacement to be ordered with subcode -0017.

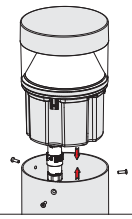





IP66 IK10

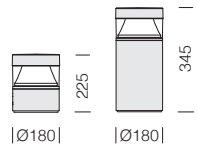

LED: power factor ≥0,9. Luminous flux maintenance 90%: 50.000h (L90B10)

1791 Faro 5 - mini version - "XW" wide beam

		CLD			LUMEN OUTPUT (tq= 25 °C)
LED	colour	weight	code	W tot	K - ølm - CRI
LED	graphite	2.70	510645-00	**5**	4000K - 380lm - CRI 80
			510645-39		3000K - 361lm - CRI 80

1792 Faro 5 - short version - "XW" wide beam

		CLD			LUMEN OUTPUT (tq= 25 °C)
LED	colour	weight	code	W tot	K - ølm - CRI
LED	graphite	3.30	510647-00	**5**	4000K - 380lm - CRI 80
			510647-39		3000K - 361lm - CRI 80

RG0

U.V.

3000K

4000K

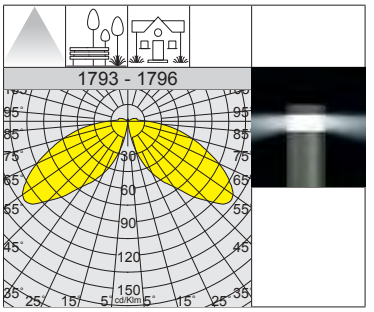

Upon request: optical group replacement to be ordered with subcode -0017.

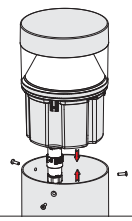





IP66 IK10

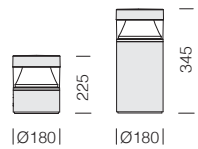

LED: power factor ≥0,9. Luminous flux maintenance 90%: 50.000h (L90B10)

1793 Faro 5 - mini version

		CLD			LUMEN OUTPUT (tq= 25 °C)
LED	colour	weight	code	W tot	K - ølm - CRI
LED	graphite	2.70	510640-00	**5**	4000K - 750lm - CRI 80
			510640-39		3000K - 712lm - CRI 80

1796 Faro 5 - short version

		CLD			LUMEN OUTPUT (tq= 25 °C)
LED	colour	weight	code	W tot	K - ølm - CRI
LED	graphite	3.30	510620-00	**5**	4000K - 750lm - CRI 80
			510620-39		3000K - 712lm - CRI 80

IP66 IK10

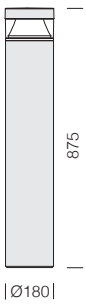

LED: power factor ≥0,9.
Luminous flux maintenance 90%: 50.000h (L90B10)



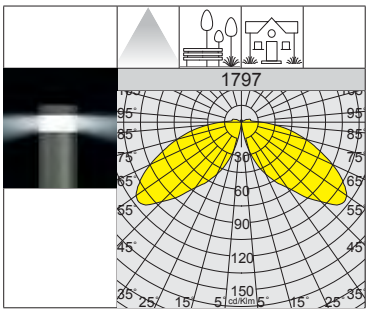

Upon request: optical group replacement to be ordered with subcode -0017.

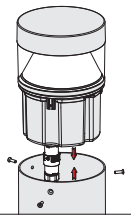

1797 Faro 5 - tall version

		CLD			LUMEN OUTPUT (tq= 25 °C)
LED	colour	weight	code	W tot	K - ølm - CRI
LED	graphite	5.60	510630-00	**5**	4000K - 750lm - CRI 80
			510630-39		3000K - 712lm - CRI 80
			510631-00	**10**	4000K - 1500lm - CRI 80
			510631-39		3000K - 1425lm - CRI 80
			510632-00	**15**	4000K - 2000lm - CRI 80
			510632-39		3000K - 1900lm - CRI 80

IP66 IK10

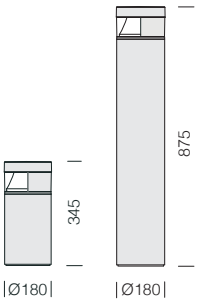

LED: power factor ≥0,9.
Luminous flux maintenance 90%: 50.000h (L90B10)





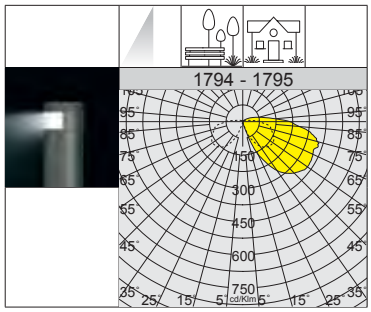

Upon request: optical group replacement to be ordered with subcode -0017.

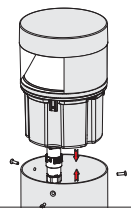

1794 Faro 5 AS - asymmetric short version

		CLD			LUMEN OUTPUT (tq= 25 °C)
LED	colour	weight	code	W tot	K - ølm - CRI
LED	graphite	3.30	510655-00	**4**	4000K - 250lm - CRI 80
			510655-39		3000K - 238lm - CRI 80

1795 Faro 5 AS - asymmetric tall version

		CLD			LUMEN OUTPUT (tq= 25 °C)
LED	colour	weight	code	W tot	K - ølm - CRI
LED	graphite	5.60	510650-00	**4**	4000K - 250lm - CRI 80
			510650-39		3000K - 238lm - CRI 80
			510651-00	**8**	4000K - 500lm - CRI 80
			510651-39		3000K - 475lm - CRI 80
			510652-00	**11**	4000K - 670lm - CRI 80
			510652-39		3000K - 637lm - CRI 80





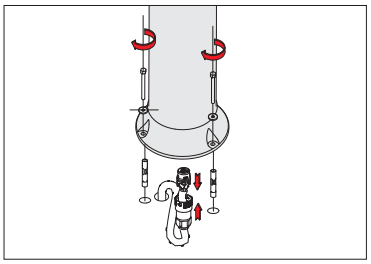





IP65 IK10

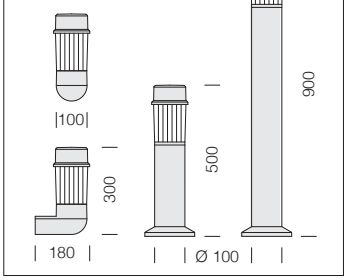

LED: power factor ≥0,9.
Luminous flux maintenance 90%: 50.000h (L90B10)

1533 Faro 2 - short version

		CLD			LUMEN OUTPUT (tq= 25 °C)
LED	colour	weight	code	W tot	K - ølm - CRI
LED	graphite	2.00	510260-00	5	4000K - 424lm - CRI 80

1531 Faro 2 - tall version

		CLD			LUMEN OUTPUT (tq= 25 °C)
LED	colour	weight	code	W tot	K - ølm - CRI
LED	graphite	3.00	510060-00	5	4000K - 424lm - CRI 80

1533 Faro 2 - IP54 wall version

		CLD			LUMEN OUTPUT (tq= 25 °C)
LED	colour	weight	code	W tot	K - ølm - CRI
LED	graphite	1.20	510460-00	5	4000K - 424lm - CRI 80

IP66 IK10

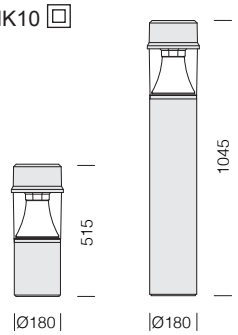

LED: power factor ≥0,9.
Luminous flux maintenance 90%: 50.000h (L90B10)





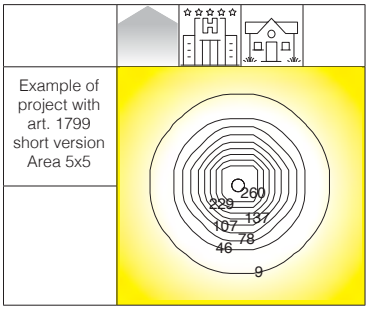

Upon request: optical group replacement to be ordered with subcode -0017.

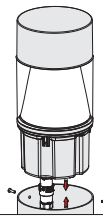

RGO U.V. 3000K 4000K

1799 Faro 4 - short version

		CLD			LUMEN OUTPUT (tq= 25 °C)
LED	colour	weight	code	W tot	K - ølm - CRI
LED	graphite	4.80	511015-00	**9**	4000K - 1050lm - CRI>80
			511015-39		3000K - 998lm - CRI>80

1798 Faro 4 - tall version

		CLD			LUMEN OUTPUT (tq= 25 °C)
LED	colour	weight	code	W tot	K - ølm - CRI
LED	graphite	7.10	511025-00	**9**	4000K - 1050lm - CRI>80
			511025-39		3000K - 998lm - CRI>80

IP66 IK10

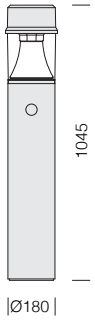

LED: power factor ≥0,9.
Luminous flux maintenance 90%: 50.000h (L90B10)



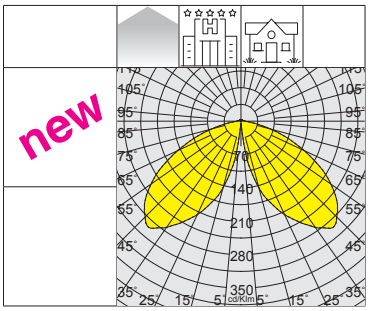

Upon request: optical group replacement to be ordered with subcode -0017.

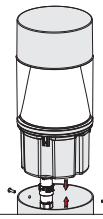

RGO U.V. 3000K 4000K

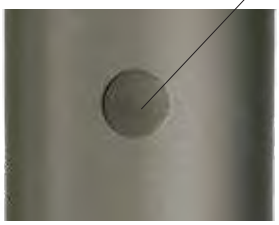

1798 Faro 4 SENSOR - tall version

		CLD			LUMEN OUTPUT (tq= 25 °C)
LED	colour	weight	code	W tot	K - ølm - CRI
LED	grafite	7.10	511025-19	**9**	4000K - **1050lm** - CRI>80
			511025-1928		3000K - **998lm** - CRI>80

Built-in RADAR SENSOR (sub-code -19 at an extra price): is an automatic sensor that immediately sense the presence of people's movements and anyone walking past. When there is movement within the sensor's detection range, the light will remain ON. When no further movement is detected, the light will switch OFF after a pre-set time.

SETTINGS	
Detection area	50%
Ambient light	disable
Hold time	3min

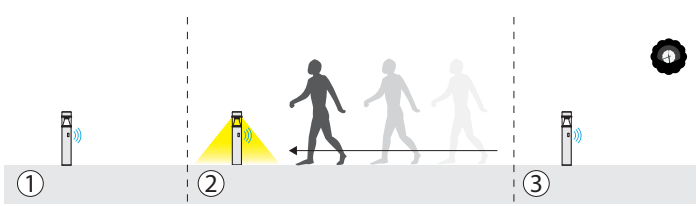

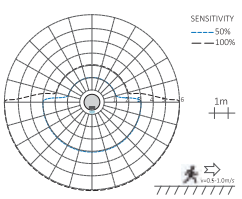



GENERAL CHARACTERISTICS

Housing: in die-cast aluminium.

Base: in die-cast aluminium.

Column: in extruded aluminium.

Diffuser: in opal, V2 polycarbonate, shatterproof and self-extinguishing, UV-stabilised.

Coating: the fully automated powder-coating cycle involves a polyester-based, salt-spray corrosion-resistant and UV-stabilised paint.

Upon request: protective coating recommended for marine environments within 5 km of the sea.

Equipment: complete with IP67 watertight connector for line connection. Easy and quick to install.

LED: power factor ≥0,9.
Luminous flux maintenance 90%: 50.000h (L90B10).

OTHER INFORMATION

The column version is equipped with anchors and waterproof connector for quick installation.

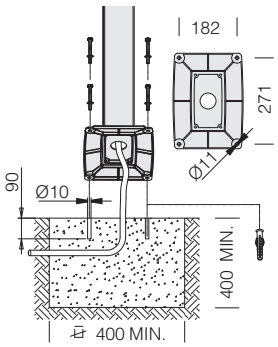

The wall version comes with mounting connection.

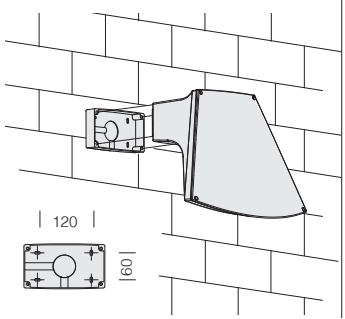





IP66IK08

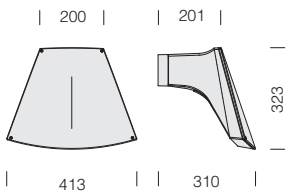

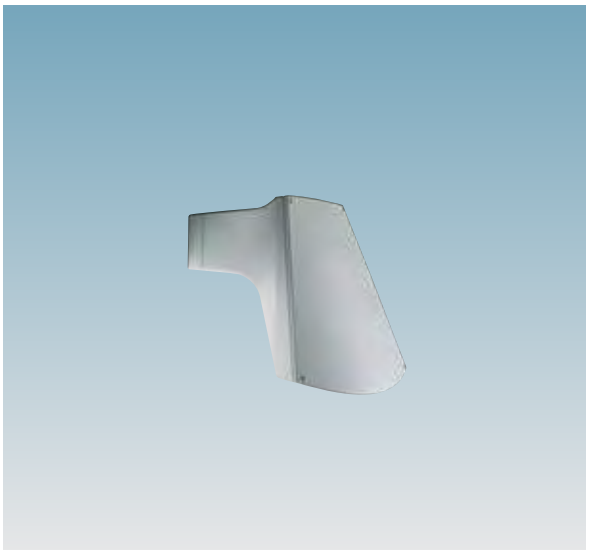

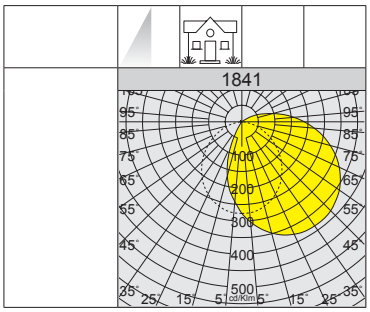



RGO

U.V.

1841 Bitta 2 wall version

		CLD			LUMEN OUTPUT (tq= 25 °C)
LED	colour	weight	code	W tot	K - ølm 110mA - CRI
LED	grey	2.70	511440-00	**5**	4000K - 549lm - CRI 80
	graphite		511441-00		

IP66IK08

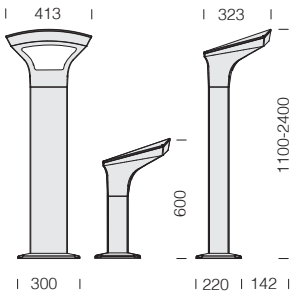





RGO

U.V.

1840 Bitta 1

		CLD				LUMEN OUTPUT (tq= 25 °C)
LED	colour	weight	code	h	W tot	K - ølm 110mA - CRI
LED	grey	4.90	511430-00	**600**	**5**	4000K - 549lm - CRI 80
	graphite		511432-00			
	RAL 7021		511433-00			
LED	grey	7.30	511435-00	**1100**	**5**	4000K - 549lm - CRI 80
	graphite		511436-00			
	RAL 7021		511437-00			

1849 Bitta 3

		CLD				LUMEN OUTPUT (tq= 25 °C)
LED	colour	weight	code	h	W tot	K - ølm 350mA - CRI
LED	grey	14.70	511443-00	**2400**	**20**	4000K - 2394lm - CRI 80
	graphite		511444-00			
	RAL 7021		511445-00			



GENERAL CHARACTERISTICS

Cover: made of die-cast aluminium.

Pole connection: pressed in die-cast aluminium. Suited for poles with a diameter 60mm.

Diffuser: in vandal-resistant V2 self-extinguishing matt polycarbonate, UV-stabilized.

Coating: the fully automated powder-coating cycle involves a polyester-based, salt-spray corrosion-resistant and UV-stabilised paint.

Standard supply: supplied with waterproof connector for line connection.

LED: power factor 0.9.
Luminous flux maintenance 90%: 50.000h (L90B10).

COMPARISON: AMALFI LED - TRADITIONAL LAMPS		
LAMP	**WATTAGE**	**ENERGY SAVING**
ALO 70	70W	**87%**
FLC 23	23W	**61%**
MBF 50	50W	**82%**
AMALFI LED	**9W**	**-**

This product is an evolution of the classic street lamp, which has become obsolete and no longer compliant with existing lighting pollution regulations. **Amalfi** ensures optimal distribution of light without upward dispersion and offers the performance of energy-efficient LEDs with exent colour rendering; it is made to allow quick and easy installation. Thanks to the quality of the materials used and innovative LED-centric design, the Amalfi fixture is built to last.

RG0

U.V.

3000K

4000K

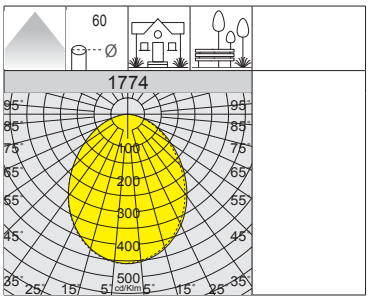

Its practical design makes it the ideal choice for the installation onto posts with 60mm in diameter and the supplied socket and plug set ensures quick and easy cabling.

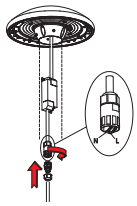



IP65IK08

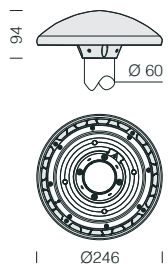

1774 Amalfi					
		CLD			LUMEN OUTPUT (tq= 25 °C)
LED	colour	weight	code	W tot	K - ølm 350mA - CRI
LED	RAL 7021	1.80	424241-00	**9**	4000K - 1100lm - CRI 80
			424241-39		3000K - 1045lm - CRI 80
LED	white	1.80	424242-00	**9**	4000K - 1100lm - CRI 80
			424242-39		3000K - 1045lm - CRI 80

GENERAL CHARACTERISTICS

Base: in die-cast aluminium.

Coating: the fully automated powder-coating cycle involves a polyester-based, salt-spray corrosion-resistant and UV-stabilised paint.

Upon request: protective coating recommended for marine environments within 5 km of the sea.

Globe: in shatterproof and self-extinguishing V2 polycarbonate, UV-stabilised and anti-yellowing. Exent transparency for perfect light penetration.

Central cone: in black painted aluminium against light pollution.

Equipment: safety diode to protect against voltage peaks compliant with EN 61547. With dedicated electronic device to protect the LED module. Complete with waterproof connector for line connection.

LED: power factor ≥0,9.
Luminous flux maintenance 90%: 50.000h (L90B10)



IP65 IK08

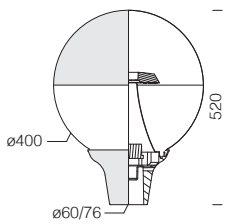

On reques: available 2200K/2700K versions.

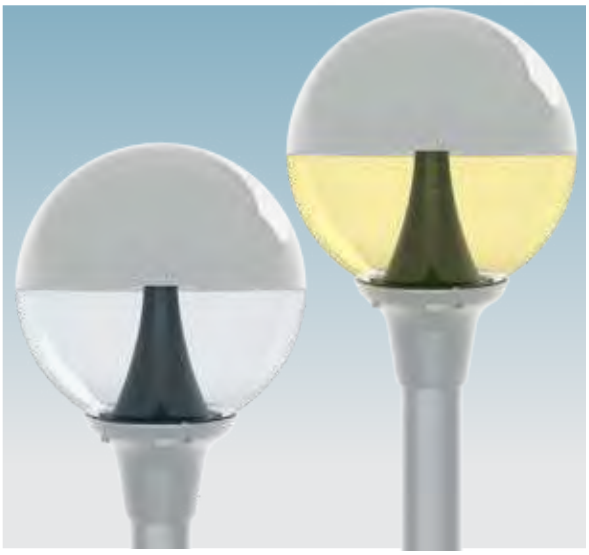

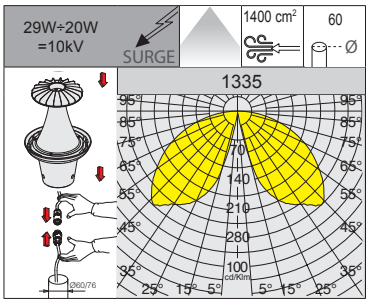



RGO

U.V.

3000K

4000K

Upon request: versions available in different colours and surface finishes to coordinate with any architectural design.



1335 Globo - anti-light pollution					
		CLD			LUMEN OUTPUT (tq= 25 °C)
LED	colour	weight	code	W tot	K - ølm - CRI
LED	grey	3.30	425600-00	**29**	4000K - 2119lm - CRI 80
			425600-39		3000K - 2013lm - CRI 80
LED	grey	3.30	425601-00	**20**	4000K - 1380lm - CRI 80
			425601-39		3000K - 1311lm - CRI 80



GENERAL CHARACTERISTICS

Housing: in die-cast aluminium.

Diffuser: in extra-clear tempered glass, 4 mm thick, thermal shock and impact resistant (UNI-EN 12150-1 : 2001).

Optics: in high-performance metallic V0 polycarbonate.

Coating: the fully automated powder-coating cycle involves a polyester-based, salt-spray corrosion-resistant and UV-stabilised paint.

Upon request: protective coating recommended for marine environments within 5 km of the sea.

Standard supply: supplied with plate for wall installation and cable with waterproof connector for line connection.

Mounting: rapid connection, the fixture does not need to be opened.

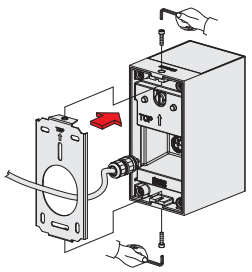

RG0 Ethr

U.V.

2200K

3000K

4000K

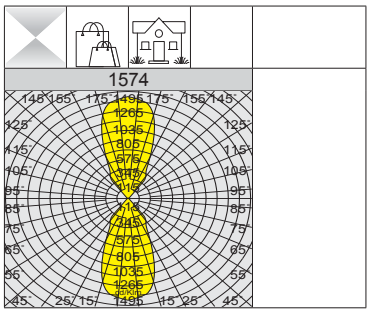





IP66IK08

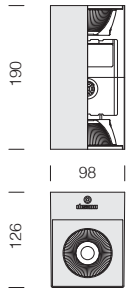

LED: Power factor ≥0.92.
Luminous flux maintenance 90%: 50.000h (L90B10).
Luminous flux maintenance 70%: 100.000h (L70B50).

Note: when ordering, make sure you select the **AMBER LED** type best suited for your lighting design and installation needs.

1574 Square - wall version - direct/indirect light

		CLD			LUMEN OUTPUT (tq= 25 °C)
LED	colour	weight	code	W tot	K - ølm 350mA - CRI
COB	white	2.20	420631-00	**25**	4000K - 3309lm - CRI 80
	graphite		420632-00		
COB	white	2.20	420634-00	**25**	3000K - 3143lm - CRI 80
	graphite		420635-00		
COB AMBER	white	2.20	420631-73	**26**	2200K - 3178lm - **AMBER**
	graphite		420632-73		

IP66IK08

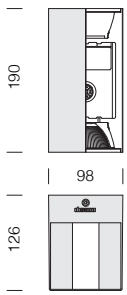

LED: Power factor ≥0.92.
Luminous flux maintenance 90%: 50.000h (L90B10).
Luminous flux maintenance 70%: 100.000h (L70B50).



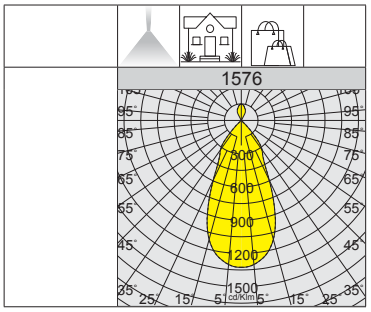



RGO Ethr
U.V.
3000K
4000K

1576 Square - wall version - direct/indirect light with narrow beam

		CLD			LUMEN OUTPUT (tq= 25 °C)
LED	colour	weight	code	W tot	K - ølm 350mA - CRI
COB	white	2.20	420646-00	14	4000K - 1791lm - CRI 80
	graphite		420647-00		
COB	white	2.20	420648-00	14	3000K - 1700lm - CRI 80
	graphite		420649-00		
					K - ølm 700mA - CRI
COB	white	2.20	420641-00	29	4000K - 3272lm - CRI 80
	graphite		420642-00		
COB	white	2.20	420644-00	29	3000K - 3108lm - CRI 80
	graphite		420645-00		

IP66IK08

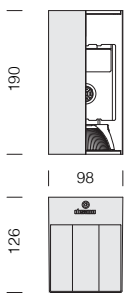

LED: Power factor ≥0.92.
Luminous flux maintenance 90%: 50.000h (L90B10).
Luminous flux maintenance 70%: 100.000h (L70B50).



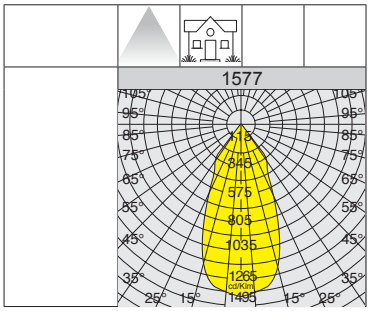



RGO Ethr
U.V.
3000K
4000K

1577 Square - wall version - direct light

		CLD			LUMEN OUTPUT (tq= 25 °C)
LED	colour	weight	code	W tot	K - ølm 350mA - CRI
COB	white	2.20	420656-00	13	4000K - 1654lm - CRI 80
	graphite		420657-00		
COB	white	2.20	420658-00	13	3000K - 1571lm - CRI 80
	graphite		420659-00		
					K - ølm 700mA - CRI
COB	white	2.20	420651-00	27	4000K - 3100lm - CRI 80
	graphite		420652-00		
COB	white	2.20	420654-00	27	3000K - 2945lm - CRI 80
	graphite		420655-00		



RG0

U.V.

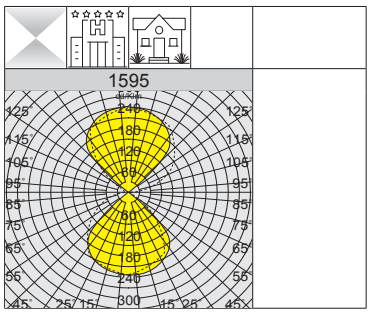





IP65 IK08

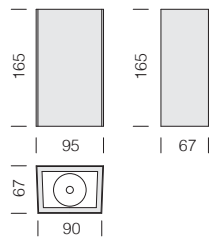

1595 Upright - direct/indirect light

		CLD			LUMEN OUTPUT (tq= 25 °C)
LED	colour	weight	code	W tot	K - ølm - CRI
COB	RAL 9016	0.70	420675-00	**10**	3000K - 940lm - CRI>80
	RAL 9005		420676-00		



GENERAL CHARACTERISTICS

Upright is a wall sconce with a linear and compact dimensions; Its design allows obtaining a soft, evenly distributed glow for direct or indirect lighting. Its high degree of protection (IP65) makes it ideal for indoor and outdoor lighting applications.

Housing: in painted aluminium with glass diffuser, designed for wall-mounting.

LED: power factor >0.9.
Luminous flux maintenance 90%: 50.000h (L90B10).
Luminous flux maintenance 70%: 100.000h (L70B50).

IP65 IK08

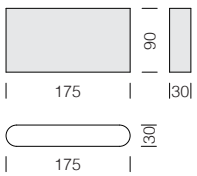

GENERAL CHARACTERISTICS

Plane is a wall sconce with an ultra-slim design. With very small dimensions, it can be easily fitted into any architectural context, while its high degree of protection (IP65) makes it ideal for indoor and outdoor lighting applications.

Housing: in painted aluminium, wallwasher lens version in clear polycarbonate and diffuser version in matt polycarbonate, designed for wall-mounting.

LED: power factor >0.9.
Luminous flux maintenance 90%: 50.000h (L90B10).

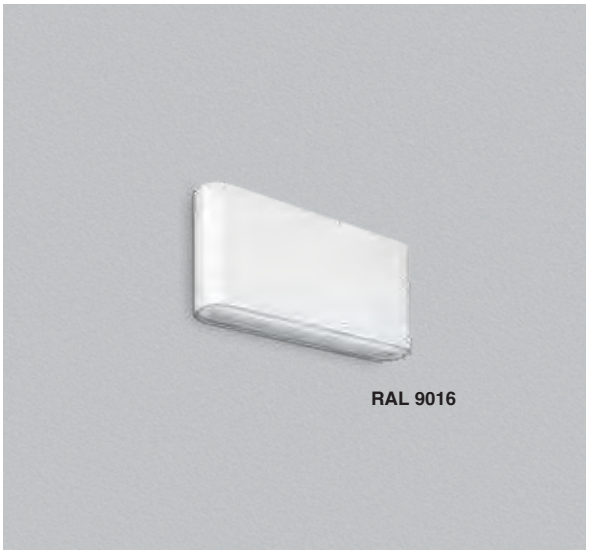

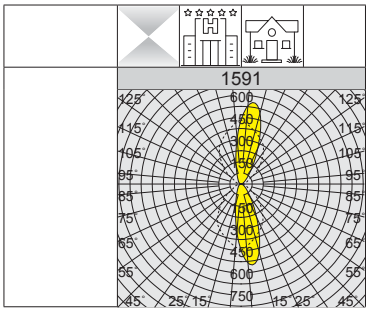



1591 Plane 1 - direct/indirect light with lens

		CLD			LUMEN OUTPUT (tq= 25 °C)
LED	colour	weight	code	W tot	K - ølm - CRI
SMD	RAL 9016	0.70	420682-2122	**10**	3000K - 940lm - CRI>80
	RAL 9005		420682-00		



IP65 IK08

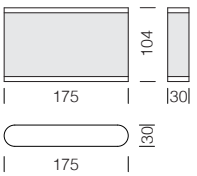

GENERAL CHARACTERISTICS

Housing: in painted aluminium, wallwasher lens version in clear polycarbonate and diffuser version in matt polycarbonate, designed for wall-mounting.

LED: power factor >0.9.
Luminous flux maintenance 90%: 50.000h (L90B10).

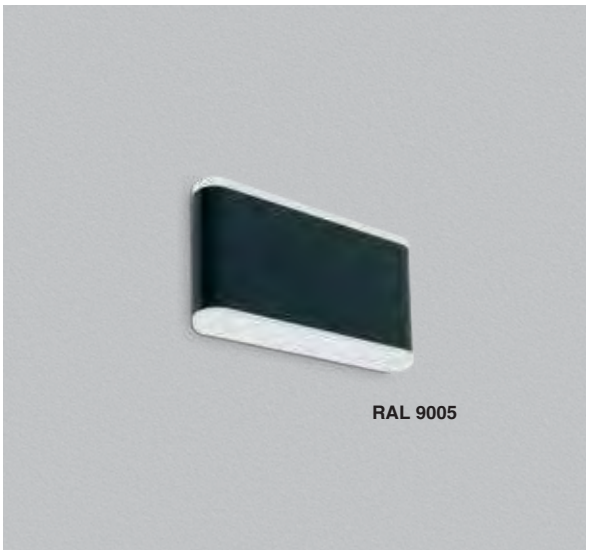

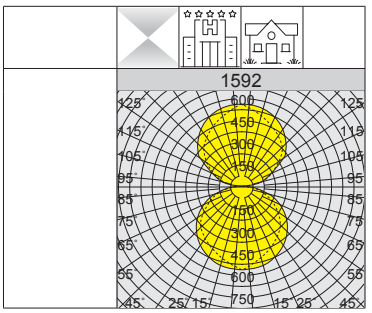

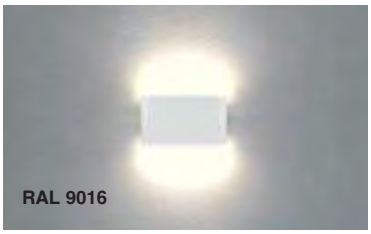

1592 Plane 2 - direct/indirect light with diffuser

		CLD			LUMEN OUTPUT (tq= 25 °C)
LED	colour	weight	code	W tot	K - ølm - CRI
SMD	RAL 9016	0.70	420683-2122	**10**	3000K - 730lm - CRI>80
	RAL 9005		420683-00		





GENERAL CHARACTERISTICS

Housing: in die-cast aluminium.

Diffuser: in tempered glass, 4 mm thick, thermal shock and impact resistant(UNI-EN 12150-1 : 2001).

Coating: the fully automated powder-coating cycle involves a polyester-based, salt-spray corrosion-resistant and UV-stabilised paint.

Upon request: protective coating recommended for marine environments within 5 km of the sea.

Standard supply: supplied with plate for wall installation and cable with waterproof connector for line connection.

Mounting: rapid connection, the fixture does not need to be opened.

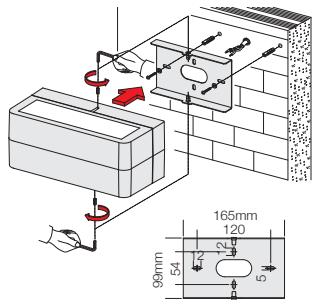

RG0

U.V.

3000K

4000K

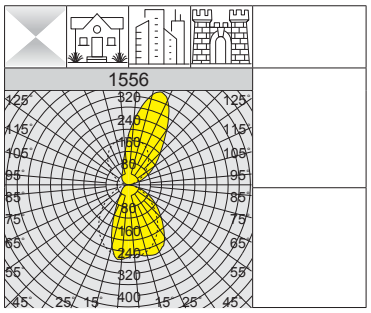



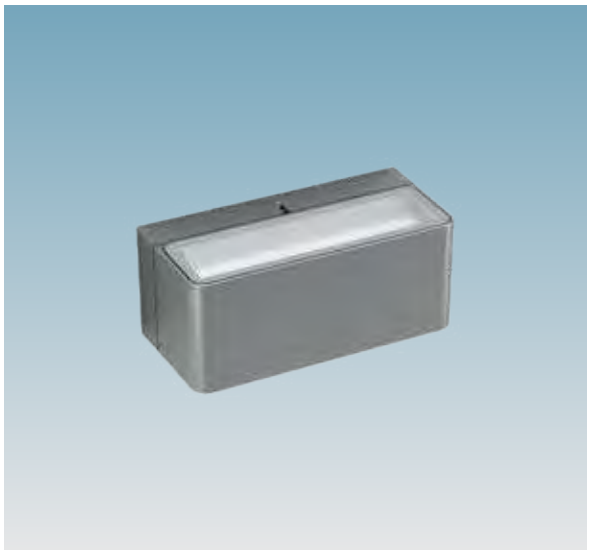

IP65 IK08

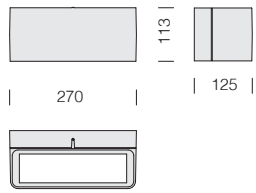

LED: power factor ≥0.9.
Luminous flux maintenance 90%: 50.000h (L90B10).

1556 Brick - direct/indirect light

		CLD			LUMEN OUTPUT (tq= 25 °C)
LED	colour	weight	code	W tot	K - ølm - CRI
LED	grey	2.30	420600-00	**19**	3000K - 1610lm - CRI 80
	white		420601-00		
	graphite		420602-00		
LED	grey	2.30	420600-68	**19**	4000K - 1695lm - CRI 80
	white		420601-68		
	graphite		420602-68		

IP65 IK08

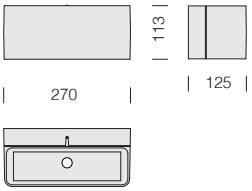

LED: power factor ≥0.9.
Luminous flux maintenance 90%: 50.000h (L90B10).



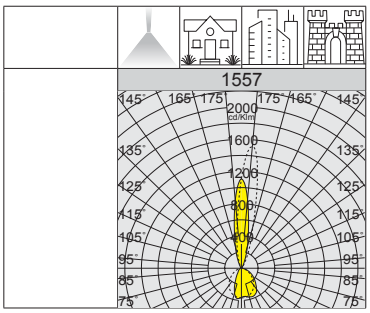



RGO U.V. 3000K 4000K

1557 Brick - direct/indirect light with narrow beam

		CLD			LUMEN OUTPUT (tq= 25 °C)
LED	colour	weight	code	W tot	K - ølm - CRI
LED	grey	2.30	420610-00	**11**	3000K - 995lm - CRI 80
	white		420611-00		
	graphite		420612-00		
LED	grey	2.30	420610-68	**11**	4000K - 1047lm - CRI 80
	white		420611-68		
	graphite		420612-68		

IP65 IK08

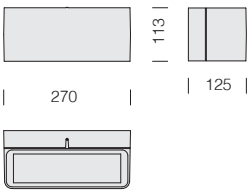

LED: power factor ≥0.9.
Luminous flux maintenance 90%: 50.000h (L90B10).

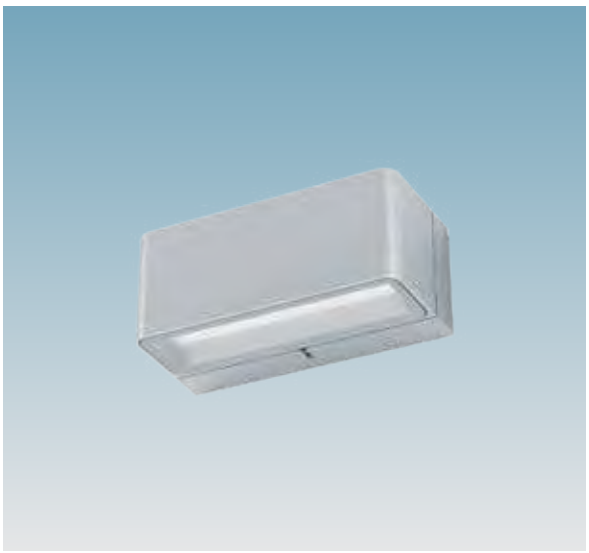

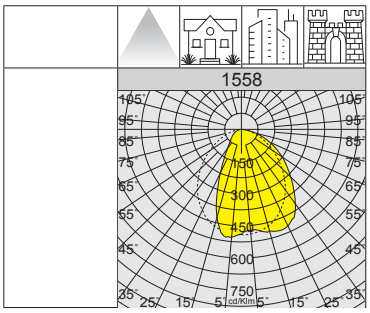



RGO U.V. 3000K 4000K

1558 Brick - direct light

		CLD			LUMEN OUTPUT (tq= 25 °C)
LED	colour	weight	code	W tot	K - ølm - CRI
LED	grey	2.30	420620-00	**10**	3000K - 816lm - CRI 80
	white		420621-00		
	graphite		420622-00		
LED	grey	2.30	420620-68	**10**	4000K - 859lm - CRI 80
	white		420621-68		
	graphite		420622-68		



GENERAL CHARACTERISTICS

Horizontal is a wall sconce with a linear design and compact dimensions, which includes a special reflector to achieve wall washing lighting effects. Its high degree of protection (IP65) makes it ideal for indoor and outdoor lighting applications.

Housing: in painted aluminium with matt glass diffuser, designed for wall-mounting.

LED: power factor >0.9.
Luminous flux maintenance 90%: 50.000h (L90B10).

RG0

U.V.

new


1594 - RAL 9016


1597 - RAL 9005


1594 - RAL 9005

IP65 IK08

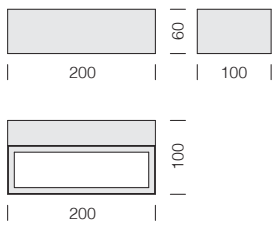

1594 Horizontal - direct/indirect light					
		CLD			LUMEN OUTPUT (tq= 25 °C)
LED	colour	weight	code	W tot	K - ølm - CRI
SMD	RAL 9016	0.70	420674-2122	10	3000K - 632lm - CRI>80
	RAL 9005		420674-00		

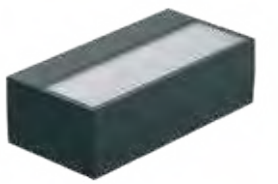

1597 Horizontal - direct light					
		CLD			LUMEN OUTPUT (tq= 25 °C)
LED	colour	weight	code	W tot	K - ølm - CRI
SMD	RAL 9016	0.70	420677-2122	10	3000K - 670lm - CRI>80
	RAL 9005		420677-00		

GENERAL CHARACTERISTICS

Swinging is a wall sconce that provides a wide range of lighting effects by adjusting the fins to the desired light beam angle from 30° to 120°. Its high degree of protection (IP65) makes it ideal for indoor and outdoor lighting applications.

Housing: in painted aluminium with clear polycarbonate diffuser, designed for wall-mounting.

LED: power factor >0.9.
Luminous flux maintenance 90%: 50.000h (L90B10).



IP65 IK06

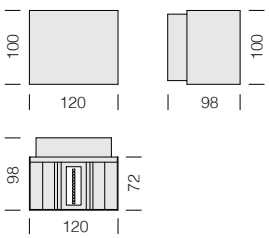



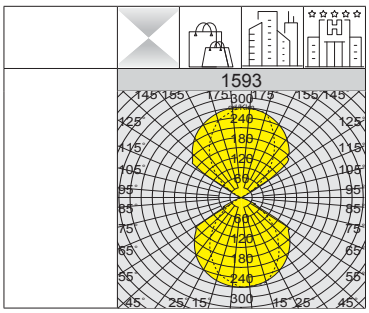

RGO

U.V.

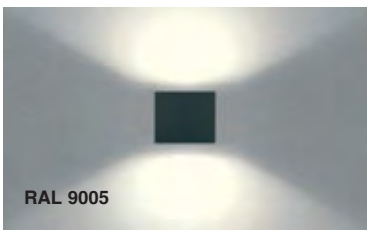

1593 Swinging - direct/indirect light orientable					
		CLD			LUMEN OUTPUT (tq= 25 °C)
LED	colour	weight	code	W tot	K - ølm - CRI
SMD	RAL 9016	0.50	420664-2122	10	3000K - 830lm - CRI>80
	RAL 9005		420664-00		



Direct and indirect beam angles (30°÷120°) can be selected by means of the integrated dimming fins.



GENERAL CHARACTERISTICS

Housing: die-cast aluminium.

Diffuser: resistant to thermal shock and impact 4 mm thick tempered glass (UNI-EN 12150-1 : 2001).

Coating: the fully automated powder-coating cycle involves a polyester-based, salt-spray corrosion-resistant and UV-stabilised paint.

Upon request: protective coating recommended for marine environments within 5 km of the sea.

Standard supply: safety diode to protect against voltage peaks compliant with EN 61547. With dedicated electronic device to protect the LED module.

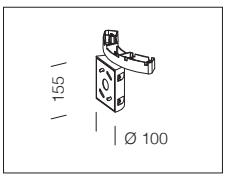

acc. 366
wall connection

graphite	998024

In die-cast aluminium. for wall mounting.

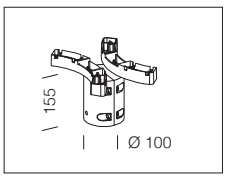

acc. 365
double pole connector

graphite	998022-00

In die-cast aluminium. For installation on a dia. 60 lighting pole in the two-lamp version.

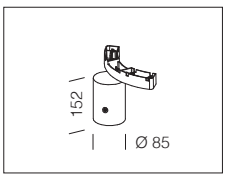

acc. 364
single pole connector

graphite	998020-00

In die-cast aluminium. For installation on a dia. 60 lighting pole in the single lamp version.

RG0 Ethr

U.V.

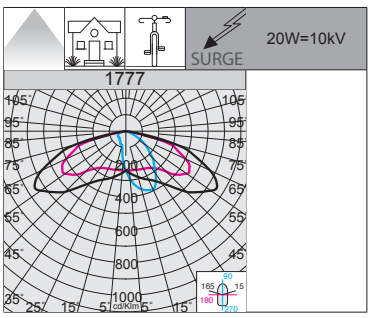

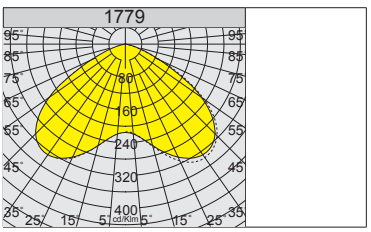



IP65 IK08

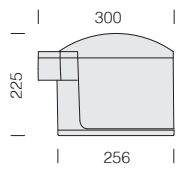

LED: power factor ≥0.9.
Luminous flux maintenance 90%: 50.000h (L90B10).

1777 Musa - pedestrian

		CLD			LUMEN OUTPUT (tq= 25 °C)
LED	colour	weight	code	W tot	K - ølm 210mA - CRI
LED	grey+graphite	4.50	423547-00	**20**	4000K - 2850lm - CRI 70

1779 Musa - wide beam

		CLD			LUMEN OUTPUT (tq= 25 °C)
LED	colour	weight	code	W tot	K - ølm 210mA - CRI
LED	grey+graphite	4.50	423555-00	**20**	4000K - 3027lm - CRI 70

IP65IK08

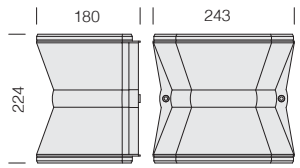

CRI 90

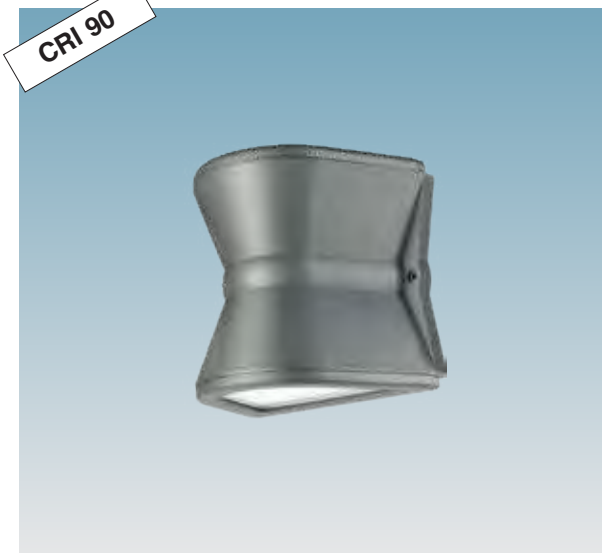

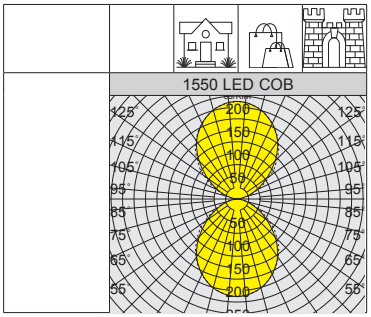

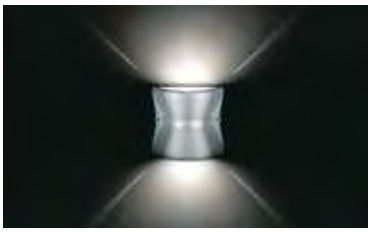

RGO

U.V.

2700K

4000K

GENERAL CHARACTERISTICS

Housing: die-cast aluminium.

Diffuser: tempered shock and heat resistant glass (UNI-EN 12150-1 : 2001).

Coating: the fully automated powder-coating cycle involves a polyester-based, salt-spray corrosion-resistant and UV-stabilised paint.

LED: power factor ≥0.9.
Luminous flux maintenance 90%: 50.000h (L90B10).
Luminous flux maintenance 70%: 100.000h (L70B50).

LED (LAMP E27): 15.000h.

1550 Clessidra 4 - direct /indirect light

		CLD			LUMEN OUTPUT (tq= 25 °C)
LED	colour	weight	code	W tot	K - ølm - CRI
COB	grey	2.70	420590-00	**30**	4000K - 922lm - **CRI 90**
	graphite		420592-00		
COB	grey	2.70	420583-00	**15**	4000K - 555lm - **CRI 90**
	graphite		420584-00		

1547 Clessidra 4 - direct /indirect light

		CLD S+L			LED (tp= 25 °C)
LED	colour	weight	code	W tot	K - ølm 230V - CRI
LED (LAMP E27)	grey	2.70	420561-00	**max. 16**	2700K - 1600lm - CRI 80
	graphite		420562-00		

IP65IK08

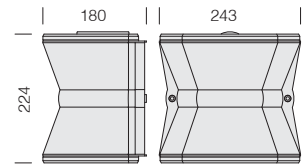

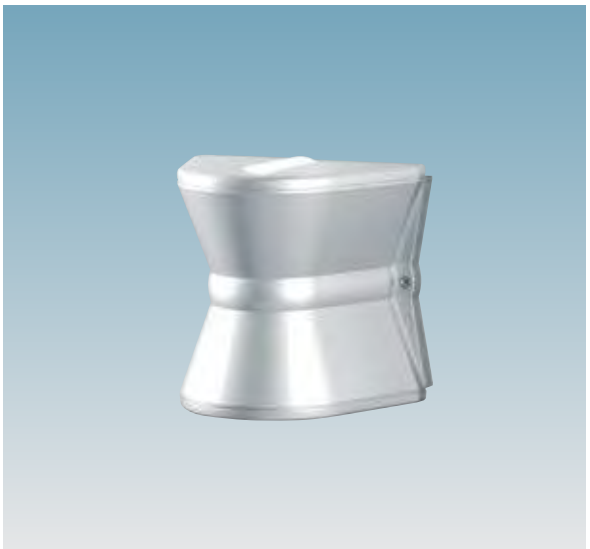

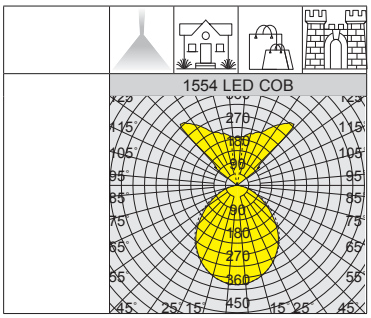



RGO

U.V.

LED: power factor ≥0.9.
Luminous flux maintenance 90%: 50.000h (L90B10).
Luminous flux maintenance 70%: 100.000h (L70B50).

1554 Clessidra 5 - direct /indirect light

		CLD			LUMEN OUTPUT (tq= 25 °C)
LED	colour	weight	code	W tot	K - ølm - CRI
COB	grey	2.70	420598-00	**22**	4000K - 880lm - CRI 80
	graphite		420599-00		
COB	grey	2.70	420588-00	**12**	4000K - 562lm - CRI 80
	graphite		420589-00		

RG0 Ethr

U.V.

2200K

4000K

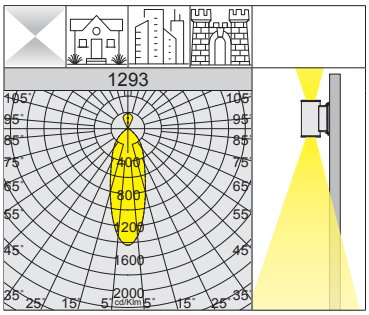

Note: when ordering, make sure you select the **AMBER LED** type best suited for your lighting design and installation needs.



IP65 IK08

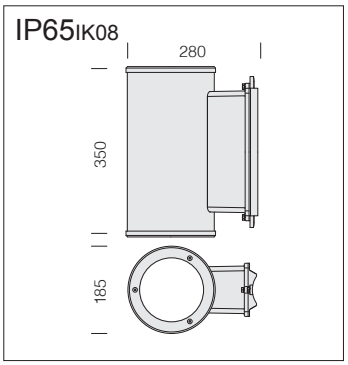

GENERAL CHARACTERISTICS

Housing: die-cast aluminium.

Diffuser: tempered glass, 4 mm thick, thermal shock and impact resistant (UNI-EN 12150-1 : 2001).

Standard supply: safety diode to protect against voltage peaks compliant with EN 61547. With dedicated electronic device to protect the LED module. Standard version **includes double switching.**

LED: power factor ≥0.9.
Luminous flux maintenance 90%: 50.000h (L90B10).
Luminous flux maintenance 70%: 100.000h (L70B50).

1293 Cilindro 4 - direct/indirect light

		CLD			LUMEN OUTPUT (tq= 25 °C)
LED	colour	weight	code	W tot	K - ølm 700mA - CRI
COB	grey	6.30	420410-00	42	4000K - 4884lm - FM+FM - CRI 80
			420427-00		4000K - 3485lm - FS+FM - CRI 80
COB AMBER			420410-73	40	2200K - 3470lm - FM+FM - **AMBER**

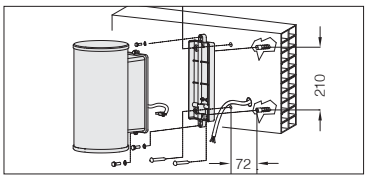

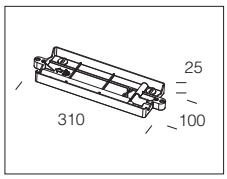

acc. 401 wall mounting	
grey	420450-00
corten	420450-2191
Wall mounting for Cilindro.	

RG0 Ethr

U.V.



Upon request: chrome version.





IP65 IK08

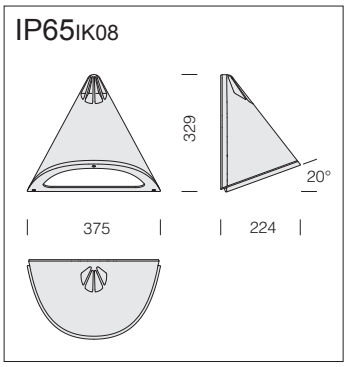

GENERAL CHARACTERISTICS

Housing/Frame: in die-cast aluminium.

Diffuser: in tempered glass, thermal shock and impact resistant.

LED: power factor ≥0.9.
Luminous flux maintenance 90%: 50.000h (L90B10).

1282 Meridiana

		CLD			LUMEN OUTPUT (tq= 25 °C)
LED	colour	weight	code	W tot	K - ølm - CRI
LED	grey	3.10	423095-00	8	4000K - 1119lm - CRI **70**
	graphite		423096-00		
LED	grey	3.10	423097-00	17	4000K - **2363lm** - CRI **70**
	graphite		423099-00		

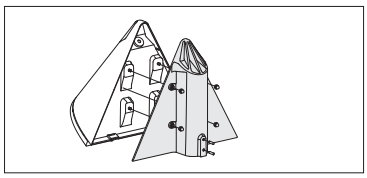

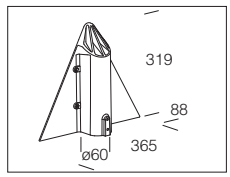

acc. 96 Pole connection Ø 60	
s. silver	991217-00
graphite	991218-00
In die-cast aluminium. To be used for fixing Meridiana on pole Ø 60.	



IP65 IK08

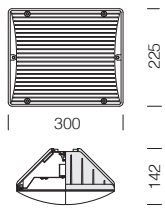

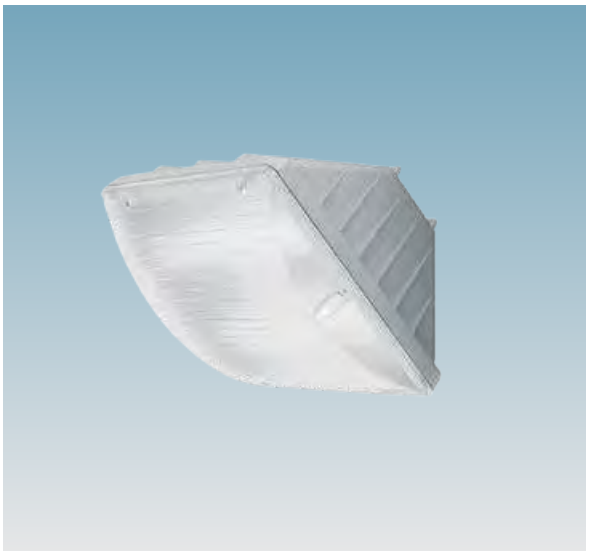

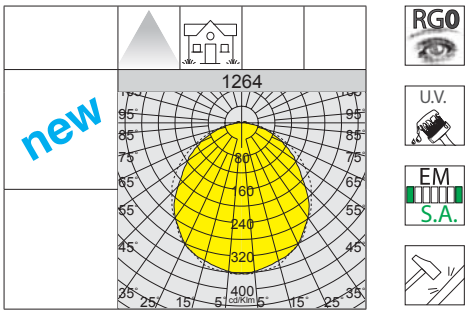

RGO
U.V.
EM S.A.

GENERAL CHARACTERISTICS

Housing: in nylon UV-stabilised.

Reflector: hammered aluminium.

Diffuser: anti-glare, vandal resistant, V2 selfExtinguishing, UV-stabilised matt polycarbonate.

LED: power factor ≥0.9.
Luminous flux maintenance 90%: 100.000h (L90B10).

1264 Vega

		CLD		CLD E		LUMEN OUTPUT (tq= 25 °C)
LED	colour	weight	code	code	W tot	K - ølm - CRI
LED	black	1.50	420665-00	420665-07	10	4000K - 1760lm - CRI 70
	grey		420666-00	420666-07		
	black		420669-00		20	4000K - 3560lm - CRI 70

acc. 1266 joint

black	420915-00
grey	420916-00

1-lamp adjustable support in nylon. For Ø 60 poles.

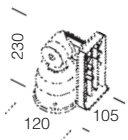



Self adhesive pictograms available:

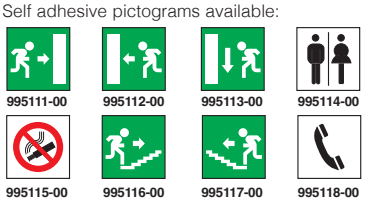

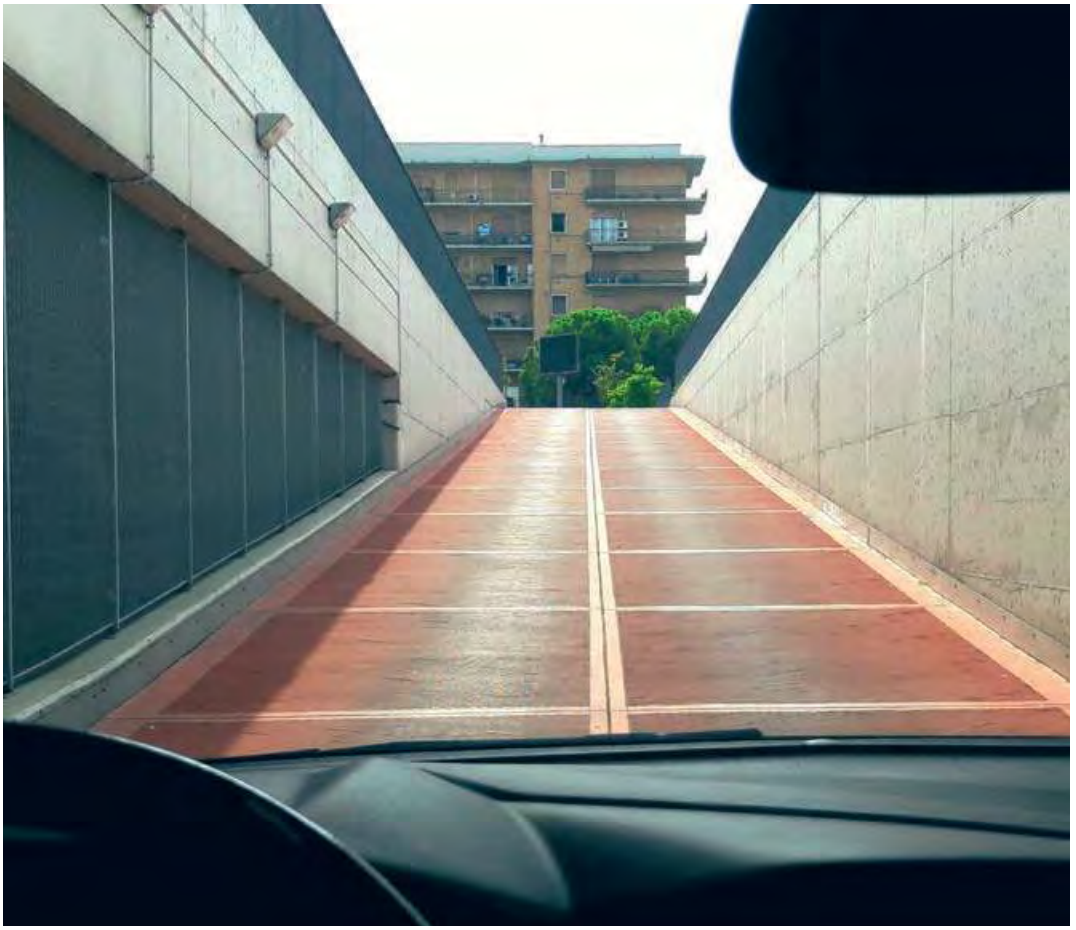

GENERAL CHARACTERISTICS

Housing: shatter-proof, UV-stabilized thermoplastic material, RAL7045 grey colour.

Reflector: in aluminium.

Diffuser: in internally matt, anti-glare, shatter-proof and V2 selfExtinguishing, UV-stabilized polycarbonate.

Equipment: bowl sealing in black expanded EPDM; external screws in galvanized stainless steel and black O-rings. Complete with fixing plate.

Mounting: wall or pole(ø 60).

LED: power factor ≥0.9.
Luminous flux maintenance 90%: 50.000h (L90B10).

RG0

U.V.

EM S.A.

Wall mounting with bracket supplied as a standard feature.

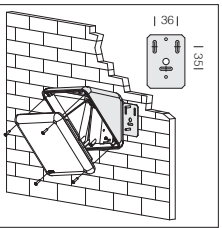

ON-OFF Light sensor / presence (sub-code -19): is an automatic sensor that immediately sense the presence of people's movements and anyone walking past. When there is movement within the sensor's detection range, the light will remain ON. When no further movement is detected, the light will switch OFF after a pre-set time.

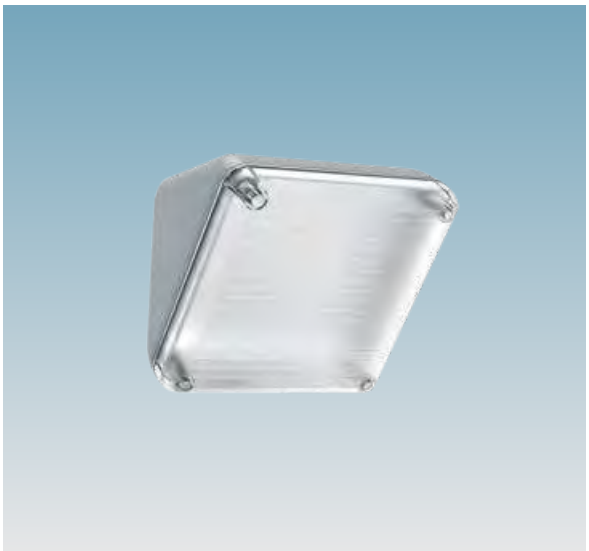

IP65 IK08

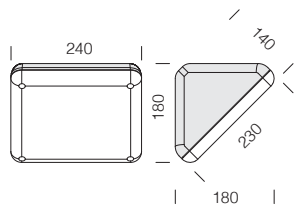

1260 Vega

		CLD		CLD E	CLD (radar sensor)		LUMEN OUTPUT (tq= 25 °C)
230V	colour	weight	code	code	code	W tot	K - ølm 230V - CRI
LED	grey	1.30	420691-00	420691-07	420691-19	**17**	4000K - 2010lm - CRI 80

		CLD S	
230V	colour	weight	code
LED (LAMP E27)	grey	1.20	420690-00

As standard, designed to fit LED lamp with E27 connector. **MAX 10W.**



Self adhesive pictograms available:

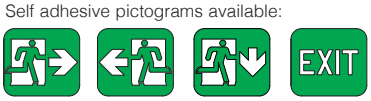

995140-00 **995141-00** **995142-00** **995143-00**



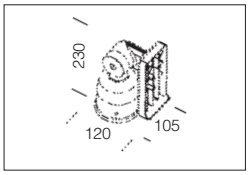

acc. 1266 joint	
grey	420917-00
1-lamp adjustable support in nylon. For Ø 60 poles.	

IP65IK08

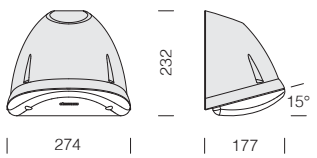



Wall mounting with bracket supplied as a standard feature.

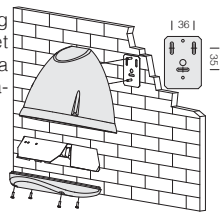



RGO U.V.

GENERAL CHARACTERISTICS

Housing: in fiberglass nylon, vandal resistant.

Reflector: anodically oxidised aluminium 99.85.

Diffuser: satin-finish polycarbonate, non-dazzle interior, shatterproof and selfExtinguishing V2, stabilised against UV rays.

LED: power factor ≥0.9.
Luminous flux maintenance 90%: 50.000h (L90B10).

1275 Green

		CLD			LUMEN OUTPUT (tq= 25 °C)
LED	colour	weight	code	W tot	K - ølm - CRI
LED	grey	0.90	428605-00	**9**	4000K - 1300lm - CRI 80
Mounting: wall or pole (ø 60).					

acc. 502 single Ø60 pole connection

grey	991260-00
Adapter for 1 Green attachment on Ø 60 pole.	

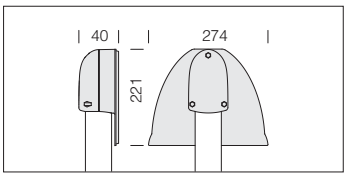

acc. 503 double Ø60 pole connection

grey	991261-00
Adapter for 2 Green attachment on Ø 60 pole.	

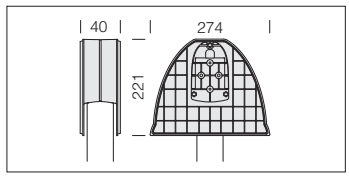

IP65IK08

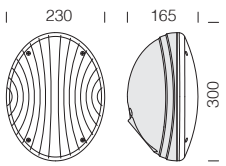



Wall mounting with bracket supplied as a standard feature.

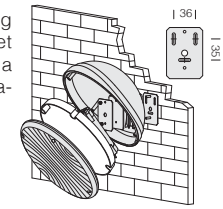

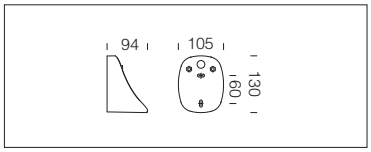

RGO U.V.

GENERAL CHARACTERISTICS

Housing: in fibreglass nylon stabilised against UV rays.

Reflector: in matt aluminium.

Diffuser: satin-finish polycarbonate, non-dazzle interior, shatterproof and selfExtinguishing V2, stabilised against UV rays.

acc. 451 wall/ceiling attachment

black	991250-00
grey	991251-00
Made of fibreglass nylon which enables Garden to be mounted directly on a wall/ceiling.	

1280 Garden

		CLD	
230V	colour	weight	code
LED (LAMP E27)	black	1.10	420845-00
	grey		420846-00
Mounting: wall or pole (ø 60).			

As standard, designed to fit LED lamp with E27 connector. **MAX 10W.**



acc. 452 single pole connection

black	991252-00
grey	991253-00
Made of fibreglass nylon which enables Garden to be mounted on a ø6o pole.	

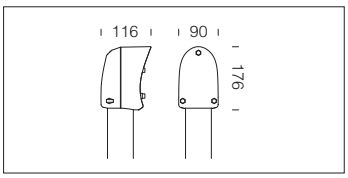

acc. 453 double pole connection

black	991254-00
grey	991255-00
Made of fibreglass nylon which enables two Garden to be mounted on a ø60 pole.	

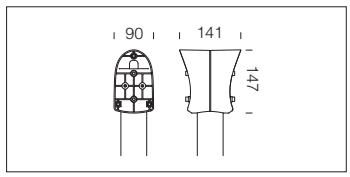

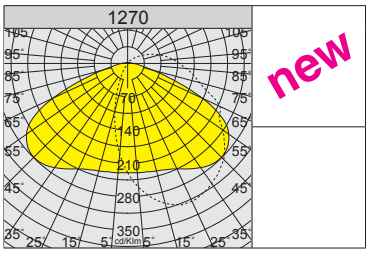





IP65IK08

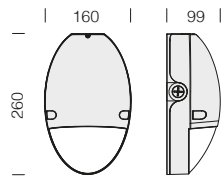

GENERAL CHARACTERISTICS

Housing: shatter-proof, UV-stabilized thermoplastic material.

Diffuser: in internally matt, anti-glare, shatter-proof and V2 selfExtinguishing, UV-stabilized polycarbonate.

Equipment: complete with fixing plate.

LED: power factor ≥0.9.
Luminous flux maintenance 90%: 50.000h (L90B10).

1270 Rugby - CCT / POWER / BEAM ANGLE SWITCH

		CLD			LUMEN OUTPUT (tq= 25 °C)
LED	colour	weight	code	W tot	K - ølm - CRI
LED	graphite	1.00	215630-00	**8**	3000K - **910lm** - CRI 80
					4000K - **960lm** - CRI 80
					5000K - **960lm** - CRI 80
				15	3000K - **1780lm** - CRI 80
					4000K - **1875lm** - CRI 80
					5000K - **1875lm** - CRI 80
				25	3000K - **3090lm** - CRI 80
					4000K - **3250lm** - CRI 80
					5000K - **3250lm** - CRI 80
LED	white	1.00	215631-00	**8**	3000K - **910lm** - CRI 80
					4000K - **960lm** - CRI 80
					5000K - **960lm** - CRI 80
				15	3000K - **1780lm** - CRI 80
					4000K - **1875lm** - CRI 80
					5000K - **1875lm** - CRI 80
				25	3000K - **3090lm** - CRI 80
					4000K - **3250lm** - CRI 80
					5000K - **3250lm** - CRI 80
LED	brown	1.00	215633-00	**8**	3000K - **910lm** - CRI 80
					4000K - **960lm** - CRI 80
					5000K - **960lm** - CRI 80
				15	3000K - **1780lm** - CRI 80
					4000K - **1875lm** - CRI 80
					5000K - **1875lm** - CRI 80
				25	3000K - **3090lm** - CRI 80
					4000K - **3250lm** - CRI 80
					5000K - **3250lm** - CRI 80

Rugby - CCT / POWER / BEAM ANGLE SWITCH - LED luminaire featuring a simple design and easy installation. Equipped with a built-in DIP switch for selecting the light beam, it offers three colour temperatures (3000 K, 4000 K, 5000 K) and three power ratings (8 W, 15 W, 25 W), adapting to different application needs. The built-in twilight sensor makes it ideal for residential areas, ensuring energy efficiency and visual comfort.

CCT SWITCH = with this integrated switch you can select the desired light colour, 3000K - 4000K - 5000K.

POWER SWITCH = with this integrated switch you can select the fixture's total wattage, 8W - 15W - 25W.

BEAM ANGLE SWITCH = with this integrated switch you can select the type of light beam opening.

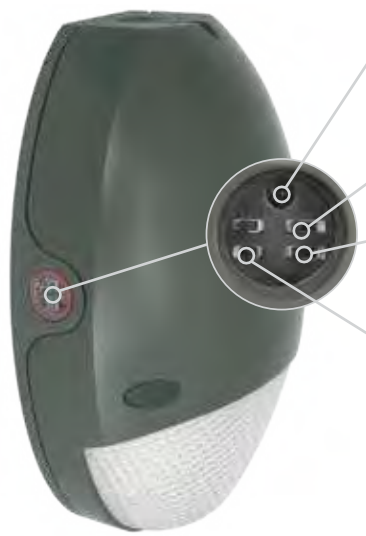

- standard-equipped with twilight sensor that automatically switches the luminaire on or off when the preset light level threshold is reached.

The main feature of this fixture is the new colour-changing technology. With **3 built-in switches** positioned on housing of the fixture, you can:

- select the type of brightness with 3 output power ranges: Low = 8W Medium = 15W High = 25W
- select 3 different colour temperatures, adjusting to most installations:

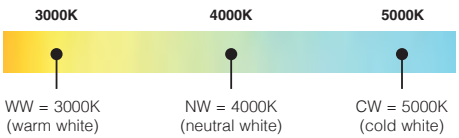

- select the type of light beam opening:

WIDE LIGHT BEAM MODE

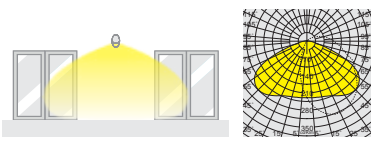

WIDE + HIGH LIGHT BEAM MODE

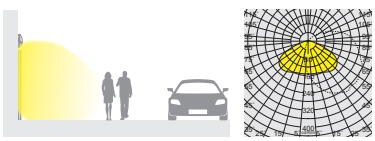

IP65IK08

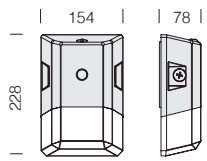



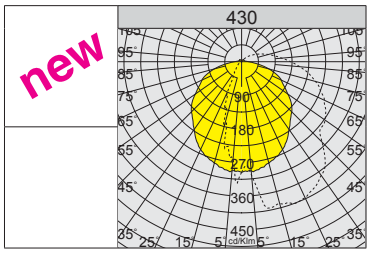



RGO U.V.

GENERAL CHARACTERISTICS

Housing: shatter-proof, UV-stabilized thermoplastic material.

Reflector: in polycarbonate.

Diffuser: in internally matt, anti-glare, shatter-proof and V2 selfExtinguishing, UV-stabilized polycarbonate.

Equipment: complete with fixing plate.

LED: power factor ≥0.9.
Luminous flux maintenance 90%: 50.000h (L90B10).

430 Cometa - CCT / POWER / BEAM ANGLE SWITCH

		CLD			LUMEN OUTPUT (tq= 25 °C)
LED	colour	weight	code	W tot	K - ølm - CRI
LED	graphite	0.80	215620-00	8	3000K - **1065lm** - CRI 80
					4000K - **1120lm** - CRI 80
					5000K - **1120lm** - CRI 80
				15	3000K - **1995lm** - CRI 80
					4000K - **2100lm** - CRI 80
					5000K - **2100lm** - CRI 80
				25	3000K - **3325lm** - CRI 80
					4000K - **3500lm** - CRI 80
					5000K - **3500lm** - CRI 80
LED	white	0.80	215622-00	8	3000K - **1065lm** - CRI 80
					4000K - **1120lm** - CRI 80
					5000K - **1120lm** - CRI 80
				15	3000K - **1995lm** - CRI 80
					4000K - **2100lm** - CRI 80
					5000K - **2100lm** - CRI 80
				25	3000K - **3325lm** - CRI 80
					4000K - **3500lm** - CRI 80
					5000K - **3500lm** - CRI 80
LED	brown	0.80	215623-00	8	3000K - **1065lm** - CRI 80
					4000K - **1120lm** - CRI 80
					5000K - **1120lm** - CRI 80
				15	3000K - **1995lm** - CRI 80
					4000K - **2100lm** - CRI 80
					5000K - **2100lm** - CRI 80
				25	3000K - **3325lm** - CRI 80
					4000K - **3500lm** - CRI 80
					5000K - **3500lm** - CRI 80

Cometa - CCT / POWER / BEAM ANGLE SWITCH - LED luminaire featuring a simple design and easy installation. Equipped with a mechanical CUT OFF device for the light beam and a built-in DIP switch, it offers three colour temperatures (3000 K, 4000 K, 5000 K) and three power ratings (8 W, 15 W, 25 W), adapting to different application needs. The built-in twilight sensor makes it ideal for residential areas, ensuring energy efficiency and visual comfort.

CCT SWITCH = with this integrated switch you can select the desired light colour, 3000K - 4000K - 5000K.

POWER SWITCH = with this integrated switch you can select the fixture's total wattage, 8W - 15W - 25W.

BEAM ANGLE SWITCH = the light beam can be adjusted by mechanically rotating the device positioned on the luminaire housing.

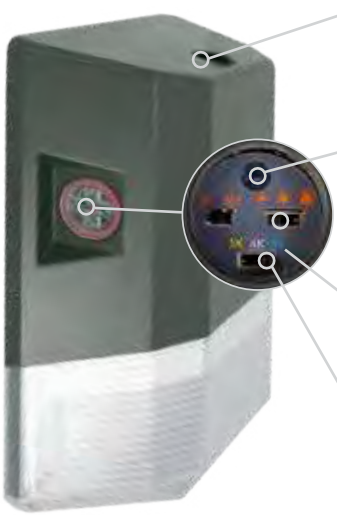

• simply rotating the mechanical device adjusts the internal reflector, allowing precise cut-off of the light beam.




NON CUT-OFF


FULL CUT-OFF

• standard-equipped with twilight sensor that automatically switches the luminaire on or off when the preset light level threshold is reached.

The main feature of this fixture is the new colour-changing technology. With **3 built-in switches** positioned on housing of the fixture, you can:

• select the type of brightness with 3 output power ranges: Low = 8W Medium = 15W High = 25W

• select 3 different colour temperatures, adjusting to most installations:

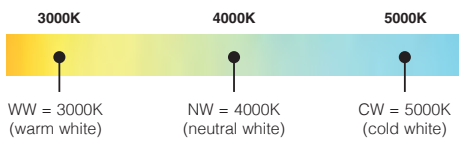



GENERAL CHARACTERISTICS

Housing/frame/base: in die-cast aluminium with central articulated joint in die-cast aluminium.

Coating: the fully automated powder-coating cycle involves a polyester-based, salt-spray corrosion-resistant and UV-stabilised paint.

Upon request: protective coating recommended for marine environments within 5 km of the sea.

LED: Power factor ≥0.92.
Luminous flux maintenance 90%: 50.000h (L90B10).
Luminous flux maintenance 70%: 100.000h (L70B50).

RG0 Ethr

U.V. free

4000K

3000K

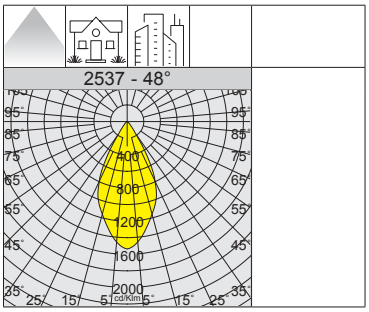



IP66 IK08

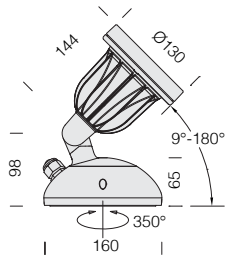

Upon request version with:
• **CLD D-D (DALI)** wiring with **sub-code -0041.**

2200K - AMBER (sub-code -73)			
W tot	ølm 700mA	W tot	ølm 1050mA
25	2897lm - 13°	39	3810lm - 13°
	2987lm - 28°		3930lm - 28°
	2983lm - 48°		3924lm - 48°

2537 Koala Big - DIP SWITCH - with reflector

		CLD				LUMEN OUTPUT (tq= 25 °C)
LED	colour	weight	code	I out	W tot	K - ølm - CRI - degrees
COB	grey	1.50	431880-00	700	25	4000K - 3493lm - CRI 80 - 13°
			431880-39			3000K - 3318lm - CRI 80 - 13°
COB	grey	1.50	431882-00	700	25	4000K - 3600lm - CRI 80 - 28°
			431882-39			3000K - 3420lm - CRI 80 - 28°
COB	grey	1.50	431883-00	700	25	4000K - 3597lm - CRI 80 - 48°
			431883-39			3000K - 3417lm - CRI 80 - 48°

DIP SWITCH SETTING		
		LUMEN OUTPUT (tq= 25 °C)
I out	W tot	K - ølm - CRI - degrees
700	*25*	*4000K - 3493lm - CRI 80 - 13°*
1050	39	4000K - 4492lm - CRI 80 - 13°

DIP SWITCH SETTING		
		LUMEN OUTPUT (tq= 25 °C)
I out	W tot	K - ølm - CRI - degrees
700	*25*	*3000K - 3318m - CRI 80 - 13°*
1050	39	3000K - 4267lm - CRI 80 - 13°

DIP SWITCH SETTING		
		LUMEN OUTPUT (tq= 25 °C)
I out	W tot	K - ølm - CRI - degrees
700	*25*	*4000K - 3600lm - CRI 80 - 28°*
1050	39	4000K - 4633lm - CRI 80 - 28°

DIP SWITCH SETTING		
		LUMEN OUTPUT (tq= 25 °C)
I out	W tot	K - ølm - CRI - degrees
700	*25*	*3000K - 3420lm - CRI 80 - 28°*
1050	39	3000K - 4401lm - CRI 80 - 28°

DIP SWITCH SETTING		
		LUMEN OUTPUT (tq= 25 °C)
I out	W tot	K - ølm - CRI - degrees
700	*25*	*4000K - 3597lm - CRI 80 - 48°*
1050	39	4000K - 4626lm - CRI 80 - 48°

DIP SWITCH SETTING		
		LUMEN OUTPUT (tq= 25 °C)
I out	W tot	K - ølm - CRI - degrees
700	*25*	*3000K - 3417lm - CRI 80 - 48°*
1050	39	3000K - 4395lm - CRI 80 - 48°

IP65IK08

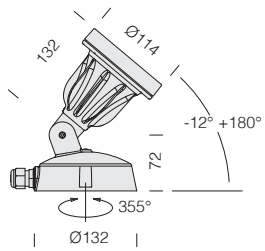


1537 - ES

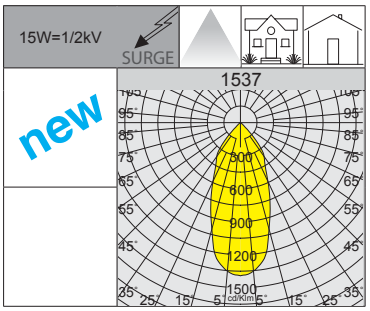

Upon request: (subcode -6035)	
COB	5700K - CRI 80

RG0 Ethr

U.V.

LOW FLICKER

3000K

4000K

Upon request version with:
• **CLD D-D (DALI)** wiring with **sub-code -0041.**

1537 Koala - COB - DIP SWITCH						
		CLD				LUMEN OUTPUT (tq= 25 °C)
LED	colour	weight	code	I out	W tot	K - ølm - CRI - degrees
COB	grey	0.80	431828-00	***350***	**15**	3000K - **1490lm** - CRI 90 - 46°
	graphite		431829-00			
COB	grey	0.80	431828-68	***350***	**15**	4000K - **1565lm** - CRI 90 - 46°
	graphite		431829-68			

DIP SWITCH SETTING		
		LUMEN OUTPUT (tq= 25 °C)
I out	W tot	K - ølm - CRI - degrees
250	**10**	3000K - 1100lm - CRI 90 - 46°
300	**13**	3000K - 1310lm - CRI 90 - 46°
350	***15***	*3000K - 1490lm - CRI 90 - 46°*
400	**17**	3000K - 1680lm - CRI 90 - 46°

DIP SWITCH SETTING		
		LUMEN OUTPUT (tq= 25 °C)
I out	W tot	K - ølm - CRI - degrees
250	**10**	4000K - 1155lm - CRI 90 - 46°
300	**13**	4000K - 1375lm - CRI 90 - 46°
350	***15***	*4000K - 1565lm - CRI 90 - 46°*
400	**17**	4000K - 1765lm - CRI 90 - 46°

1537 Koala - ES						
		CLD S+L		CLD D (IGBT)		LUMEN OUTPUT (tq= 25 °C)
230V	colour	weight	code	code	W tot	K - ølm 230V - CRI - degrees
SMD (GU10)	grey	0.70	431815-00		**6**	3000K - 429lm - CRI 80 - 38°
	graphite		431824-00			
SMD (GU10)	grey	0.70		431802-00	**7**	3000K - 429lm - CRI 80 - 38°
	graphite			431803-00		
LED: luminous flux maintenance 70%: 25.000h (L70B50). Power factor ≥0,95.						

LED SMD 6W-7W = Gu10 (230V)

ACCESSORIES KOALA - KOALA BIG

acc. 119 spike	
black	991335-00
In fiber glass nylon. For planting **Koala** and **Koala Big** into the ground.	

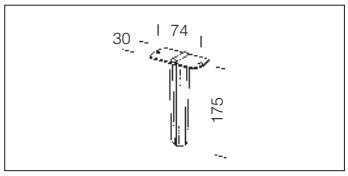

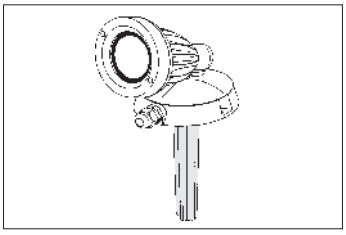



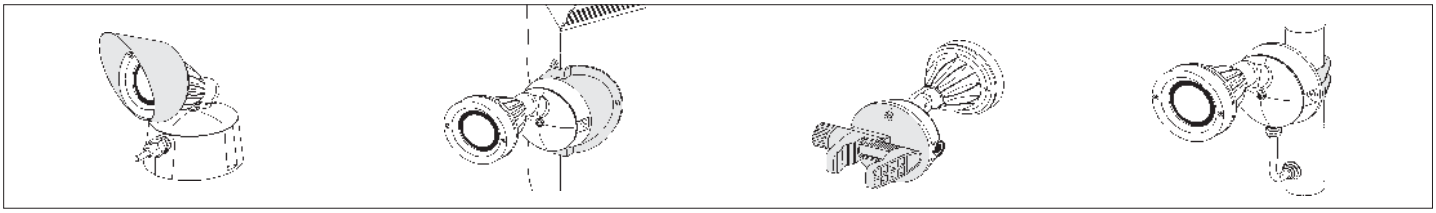

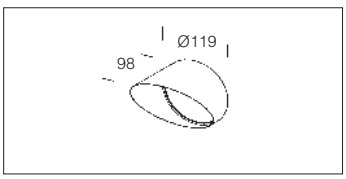

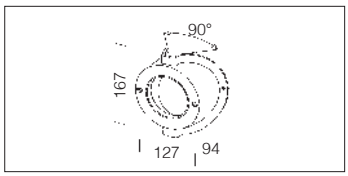

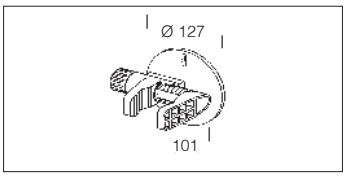

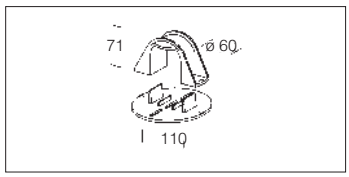

acc. 114 conveyor	
grey	991330-00
In aluminium. To direct the light beam in one direction. Only for art. Koala.	

acc. 116 corner support	
black	991332-00
In fibreglass nylon. To install Koala on a corner.	

acc. 118 clamp	
black	991334-00
In fiber glass nylon. Enables Koala to be installed on different surfaces without the need to fix it definitively. Clamp opening between 20mm (min) and 60mm (max).	

acc. 120 pole support	
black	991336-00
In fibreglass nylon. To apply Koala on any Ø 60 pole in any position.	









GENERAL CHARACTERISTICS

Housing: in die-cast aluminium.

Reflector: in high-performance silver aluminium.

Diffuser: in extra-clear tempered glass, 4 mm thick, thermal shock and impact resistant (UNI-EN 12150-1 : 2001).

Coating: the fully automated powder-coating cycle involves a polyester-based, salt-spray corrosion-resistant and UV-stabilised paint.

LED: power factor ≥0.92.
Luminous flux maintenance 90%: 50.000h (L90B10).
Luminous flux maintenance 70%: 100.000h (L70B50).

OTHER CHARACTERISTICS

Mounting: rapid connection, the fixture does not need to be opened.

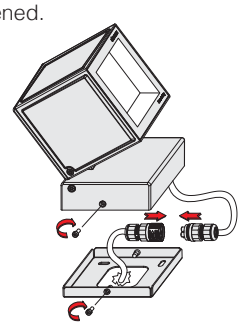

Standard supply: supplied with plate for wall installation and cable with waterproof connector for line connection.

UPON REQUEST

Protective coating recommended for marine environments within 5 km of the sea.

DIMM DIG Version **CLD D-D (DALI)** wiring with **subcode -0041:** thanks to pre-programmed settings or a software programme, this type of wiring allows accurate light emission dimming.

LED 3000K **LED 3000K - CRI 80 sub-code -39.**





In the fully adjustable spotlight version, **Square** ensures the best functional and aesthetic results with minimized consumption. The solidity of the materials used, as well as its die-cast aluminium housing and a shock and heat resistant tempered glass diffuser, make this product also ideal for outdoor installation. **Easy-to-install**, it is not necessary to open the fixture, hence increasing the versatility of Square LED for illuminating façades with class and elegance.

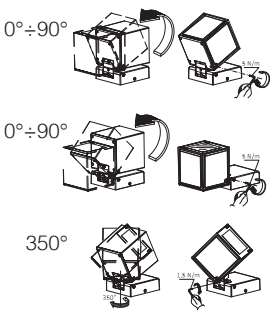

INSTALLATION EXAMPLES:

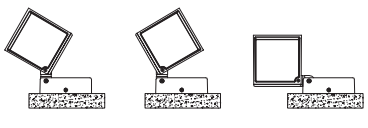

FLOOR

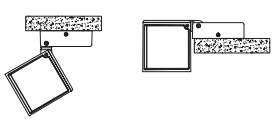

CEILING

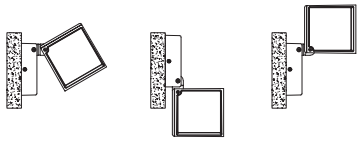

WALL

IP66IK08

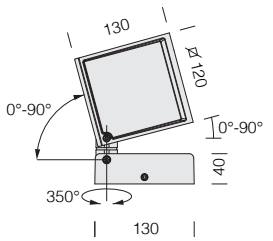

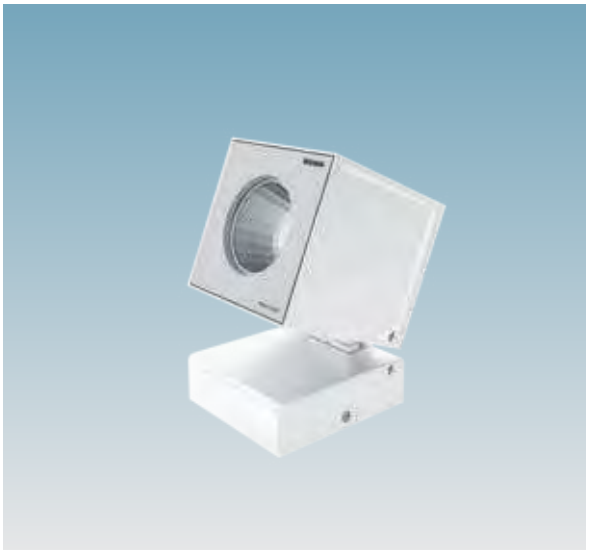

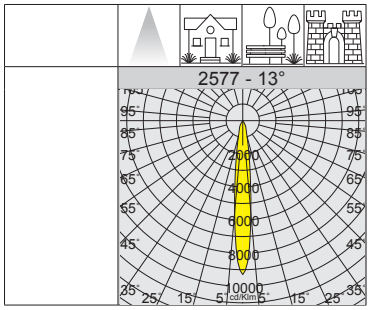

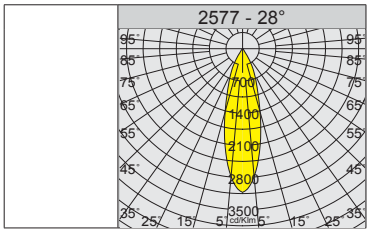

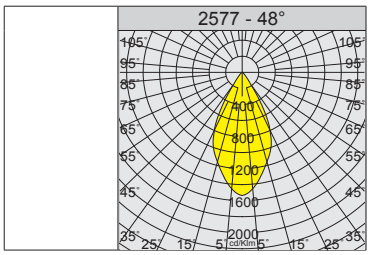

2577 Square - with reflector

		CLD			LUMEN OUTPUT (tq= 25 °C)
LED	colour	weight	code	W tot	K - ølm 1050mA - CRI - degrees
COB	white	2.60	431864-00	**40**	4000K - 4256lm - CRI 80 - 13°
	graphite		431865-00		
COB	white	2.60	431862-00	**40**	4000K - 4390lm - CRI 80 - 28°
	graphite		431863-00		
COB	white	2.60	431860-00	**40**	4000K - 4382lm - CRI 80 - 48°
	graphite		431861-00		

IP66IK08

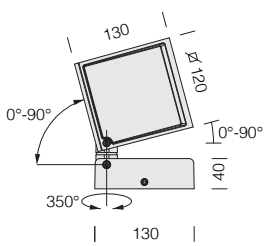

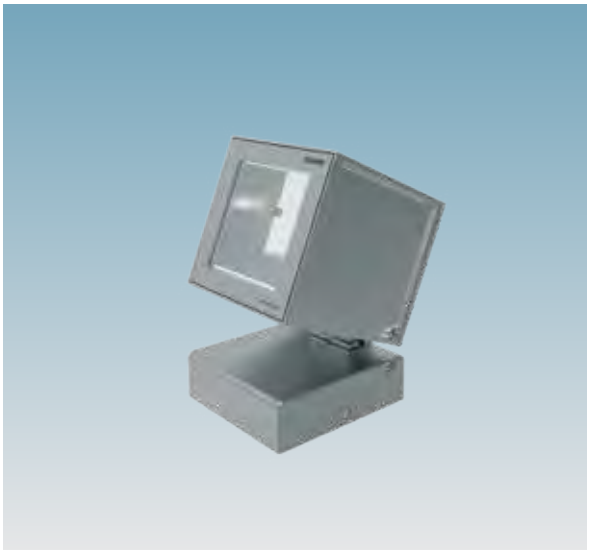

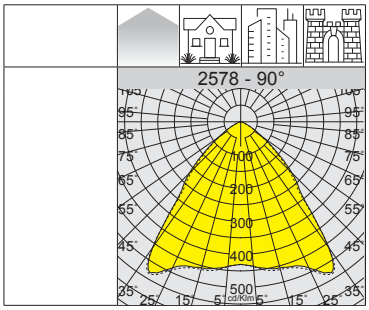



2578 Square - with optic

		CLD			LUMEN OUTPUT (tq= 25 °C)
LED	colour	weight	code	W tot	K - ølm 1050mA - CRI - degrees
COB	white	2.60	431870-00	**40**	4000K - 4440lm - CRI 80 - 90°
	graphite		431871-00		

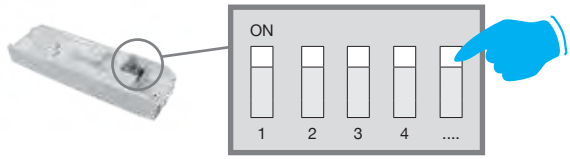

ADAPT THE CURRENT TO ACHIEVE OPTIMAL LUMINOUS FLUX

DIP SWITCH SETTING: the fixture comes with a *DIP SWITCH* driver for **THE SETTING OF THE OUTPUT CURRENT**. In this way you, can **ENSURE THE BEST LUMINOUS FLUX** for any lighting design.

The possibility to choose the correct drive current for LEDs will allow you to have the right power under specific design conditions. Using a lower current will improve the efficiency of fixtures and therefore increase energy savings, whilst a higher current will result in a higher light flux so that you can reduce the number of fixtures.



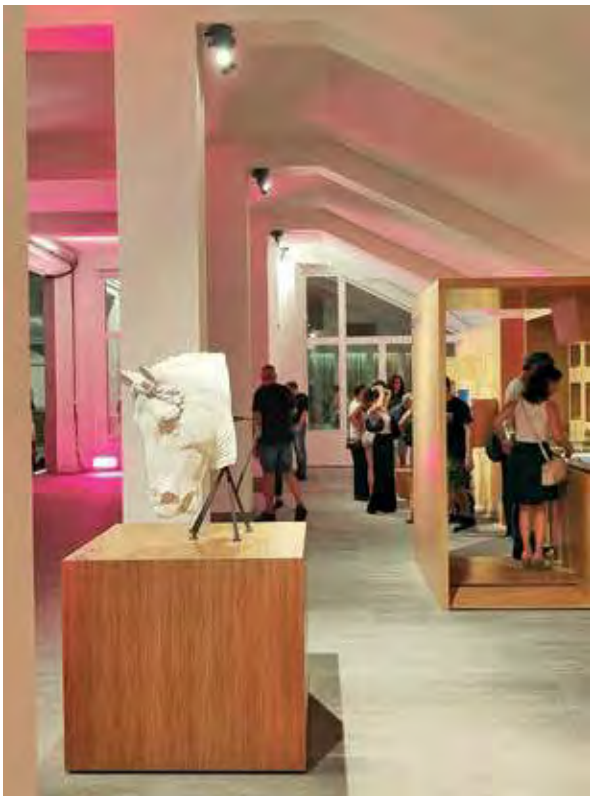

GENERAL CHARACTERISTICS

Housing/frame: in die-cast aluminium with central articulated joint in die-cast aluminium.

Base: in die-cast aluminium.

Reflector: in high-performance silver aluminium.

Diffuser: in extra clear tempered glass, 4 mm thick, resistant to thermal shocks and impacts (UNI-EN 12150-1 : 2001).

Coating: the fully automated powder-coating cycle involves a polyester-based, salt-spray corrosion-resistant and UV-stabilised paint.

Upon request: protective coating recommended for marine environments within 5 km of the sea.

OTHER CHARACTERISTICS

SURGE Electronic safety device to protect the LED module and the related ballast compliant with EN 61547.
It works in two modes:
- differential mode: surge between power cables and between the phase and neutral.
- common mode: surge between power, L/N and ground cables or between the fixture's body if it is of class II and installed on a metal pole.

LOW FLICKER Product with a very low flicker; uniform light for greater eye protection.

OTHER INFORMATION

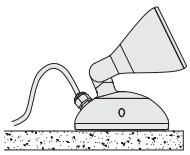

art. 2565: ideal for ground installation.

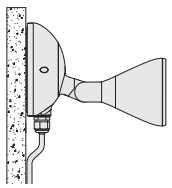

art. 2567: ideal for wall mounting where the light point is distant from the fixture.

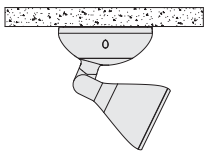

art. 2569: ideal for wall mounting where the light point is hidden.

UPON REQUEST

AMBER COB **AMBER COB 2200K subcode -73:** lamps with warm amber light at a colour temperature of 2200K eliminate the risks of an excessive exposure to harmful blue LED light and allows a "softer" impact on inhabited zones, especially in historic centres.

Note: when ordering, make sure you select the **AMBER LED** type best suited for your lighting design and installation needs.

DIMM DIG Version **CLD D-D (DALI)** wiring with **subcode -0041:** thanks to pre-programmed settings or a software programme, this type of wiring allows accurate light emission dimming.

IP66IK08

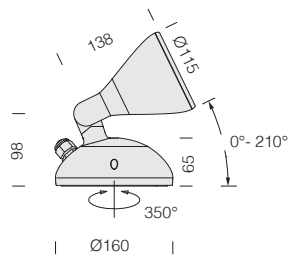



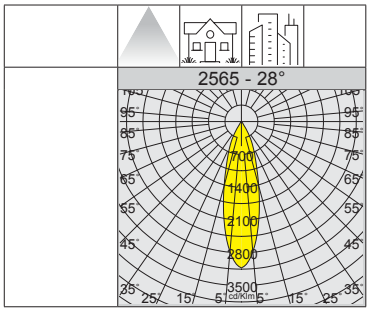

Ideal for ground installation.

LED: power factor ≥0.92.
Luminous flux maintenance 90%: 50.000h (L90B10).
Luminous flux maintenance 70%: 100.000h (L70B50).

2200K - AMBER (sub-code -73)			
W tot	ølm 700mA	W tot	ølm 1050mA
25	2897lm - 13°	39	3810lm - 13°
	2987lm - 28°		3930lm - 28°
	2983lm - 48°		3924lm - 48°

2565 Podio - DIP SWITCH - with reflector

		CLD				LUMEN OUTPUT (tq= 25 °C)
LED	colour	weight	code	I out	W tot	K - ølm - CRI - degrees
COB	grey	1.50	422510-00	700	25	4000K - 3493lm - CRI 80 - 13°
	graphite		422511-00			
COB	grey		422510-39			3000K - 3318lm - CRI 80 - 13°
	graphite		422511-39			

DIP SWITCH SETTING		
		LUMEN OUTPUT (tq= 25 °C)
I out	W tot	K - ølm - CRI - degrees
700	25	4000K - 3493lm - CRI 80 - 13°
1050	39	4000K - 4492lm - CRI 80 - 13°

DIP SWITCH SETTING		
		LUMEN OUTPUT (tq= 25 °C)
I out	W tot	K - ølm - CRI - degrees
700	25	3000K - 3318m - CRI 80 - 13°
1050	39	3000K - 4267lm - CRI 80 - 13°

COB	grey	1.50	422514-00	700	25	4000K - 3600lm - CRI 80 - 28°
	graphite		422515-00			
COB	grey		422514-39			3000K - 3420lm - CRI 80 - 28°
	graphite		422515-39			

DIP SWITCH SETTING		
		LUMEN OUTPUT (tq= 25 °C)
I out	W tot	K - ølm - CRI - degrees
700	25	4000K - 3600lm - CRI 80 - 28°
1050	39	4000K - 4633lm - CRI 80 - 28°

DIP SWITCH SETTING		
		LUMEN OUTPUT (tq= 25 °C)
I out	W tot	K - ølm - CRI - degrees
700	25	3000K - 3420lm - CRI 80 - 28°
1050	39	3000K - 4401lm - CRI 80 - 28°

COB	grey	1.50	422518-00	700	25	4000K - 3597lm - CRI 80 - 48°
	graphite		422519-00			
COB	grey		422518-39			3000K - 3417lm - CRI 80 - 48°
	graphite		422519-39			

DIP SWITCH SETTING		
		LUMEN OUTPUT (tq= 25 °C)
I out	W tot	K - ølm - CRI - degrees
700	25	4000K - 3597lm - CRI 80 - 48°
1050	39	4000K - 4626lm - CRI 80 - 48°

DIP SWITCH SETTING		
		LUMEN OUTPUT (tq= 25 °C)
I out	W tot	K - ølm - CRI - degrees
700	25	3000K - 3417lm - CRI 80 - 48°
1050	39	3000K - 4395lm - CRI 80 - 48°

Upon request version with: **CLD D-D (DALI)** wiring with **sub-code -0041.**

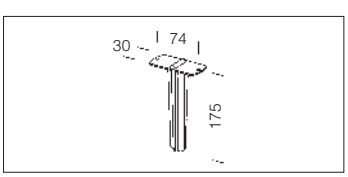

acc. 119 spike	
black	991335-00
In fiber glass nylon. For planting Podio into the ground.	



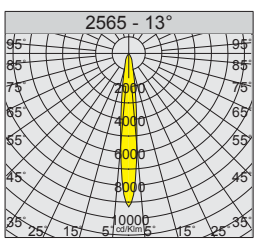

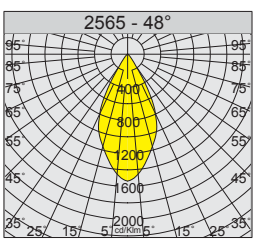

RESIDENTIAL AMENITIES

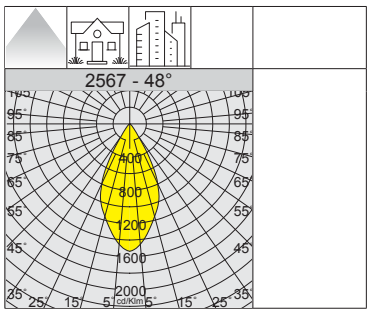

Ideal for wall mounting where the light point is distant from the fixture.



IP66IK08

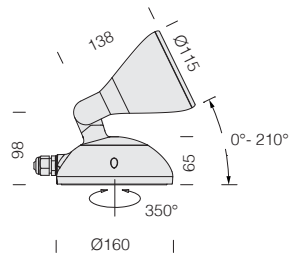

LED: power factor ≥0.92.
Luminous flux maintenance 90%: 50.000h (L90B10).
Luminous flux maintenance 70%: 100.000h (L70B50).

2200K - AMBER (sub-code -73)			
W tot	ølm 700mA	W tot	ølm 1050mA
25	2897lm - 13°	39	3810lm - 13°
	2987lm - 28°		3930lm - 28°
	2983lm - 48°		3924lm - 48°

2567 Podio - DIP SWITCH - with reflector

		CLD				LUMEN USCENTI (tq= 25 °C)
LED	colour	peso	codice	I out	W tot	K - ølm - CRI - gradi
COB	grey	1.50	422540-00	700	25	4000K - 3493lm - CRI 80 - 13°
	graphite		422541-00			
COB	grey		422540-39			3000K - 3318lm - CRI 80 - 13°
	graphite		422541-39			

DIP SWITCH SETTING		
		LUMEN OUTPUT (tq= 25 °C)
I out	W tot	K - ølm - CRI - degrees
700	*25*	*4000K - 3493lm - CRI 80 - 13°*
1050	39	4000K - 4492lm - CRI 80 - 13°

DIP SWITCH SETTING		
		LUMEN OUTPUT (tq= 25 °C)
I out	W tot	K - ølm - CRI - degrees
700	*25*	*3000K - 3318m - CRI 80 - 13°*
1050	39	3000K - 4267lm - CRI 80 - 13°

COB	grey	1.50	422544-00	700	25	4000K - 3600lm - CRI 80 - 28°
	graphite		422545-00			
COB	grey		422544-39			3000K - 3420lm - CRI 80 - 28°
	graphite		422545-39			

DIP SWITCH SETTING		
		LUMEN OUTPUT (tq= 25 °C)
I out	W tot	K - ølm - CRI - degrees
700	*25*	*4000K - 3600lm - CRI 80 - 28°*
1050	39	4000K - 4633lm - CRI 80 - 28°

DIP SWITCH SETTING		
		LUMEN OUTPUT (tq= 25 °C)
I out	W tot	K - ølm - CRI - degrees
700	*25*	*3000K - 3420lm - CRI 80 - 28°*
1050	39	3000K - 4401lm - CRI 80 - 28°

COB	grey	1.50	422548-00	700	25	4000K - 3597lm - CRI 80 - 48°
	graphite		422549-00			
COB	grey		422548-39			3000K - 3417lm - CRI 80 - 48°
	graphite		422549-39			

DIP SWITCH SETTING		
		LUMEN OUTPUT (tq= 25 °C)
I out	W tot	K - ølm - CRI - degrees
700	*25*	*4000K - 3597lm - CRI 80 - 48°*
1050	39	4000K - 4626lm - CRI 80 - 48°

DIP SWITCH SETTING		
		LUMEN OUTPUT (tq= 25 °C)
I out	W tot	K - ølm - CRI - degrees
700	*25*	*3000K - 3417lm - CRI 80 - 48°*
1050	39	3000K - 4395lm - CRI 80 - 48°

Upon request version with: **CLD D-D (DALI)** wiring with **sub-code -0041.**

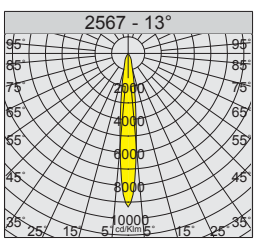

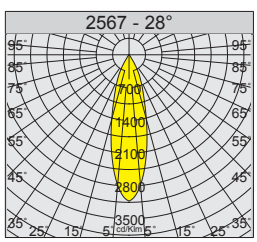



IP66IK08

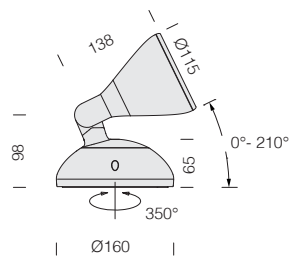



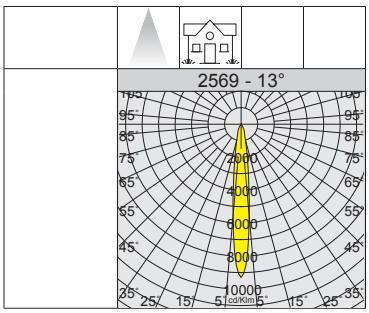

Ideal for wall mounting where the light point is hidden.

LED: power factor ≥0.92.
Luminous flux maintenance 90%: 50.000h (L90B10).
Luminous flux maintenance 70%: 100.000h (L70B50).

2569 Podio - DIP SWITCH - with reflector

		CLD				LUMEN USCENTI (tq= 25 °C)
LED	colour	peso	codice	I out	W tot	K - ølm - CRI - gradi
COB	grey	1.50	422570-00	700	25	4000K - 3493lm - CRI 80 - 13°
	white		422571-00			
COB	grey		422570-39			3000K - 3318lm - CRI 80 - 13°
	white		422571-39			

DIP SWITCH SETTING		
		LUMEN OUTPUT (tq= 25 °C)
I out	W tot	K - ølm - CRI - degrees
700	*25*	*4000K - 3493lm - CRI 80 - 13°*
1050	39	4000K - 4492lm - CRI 80 - 13°

DIP SWITCH SETTING		
		LUMEN OUTPUT (tq= 25 °C)
I out	W tot	K - ølm - CRI - degrees
700	*25*	*3000K - 3318m - CRI 80 - 13°*
1050	39	3000K - 4267lm - CRI 80 - 13°

COB	grey	1.50	422574-00	700	25	4000K - 3600lm - CRI 80 - 28°
	white		422575-00			
COB	grey		422574-39			3000K - 3420lm - CRI 80 - 28°
	white		422575-39			

DIP SWITCH SETTING		
		LUMEN OUTPUT (tq= 25 °C)
I out	W tot	K - ølm - CRI - degrees
700	*25*	*4000K - 3600lm - CRI 80 - 28°*
1050	39	4000K - 4633lm - CRI 80 - 28°

DIP SWITCH SETTING		
		LUMEN OUTPUT (tq= 25 °C)
I out	W tot	K - ølm - CRI - degrees
700	*25*	*3000K - 3420lm - CRI 80 - 28°*
1050	39	3000K - 4401lm - CRI 80 - 28°

Upon request version with: **CLD D-D (DALI)** wiring with **sub-code -0041.**



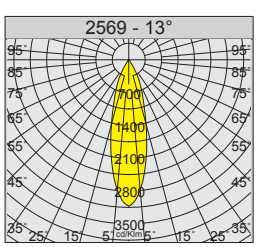

Upon request

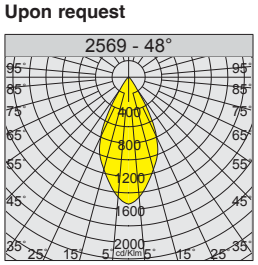

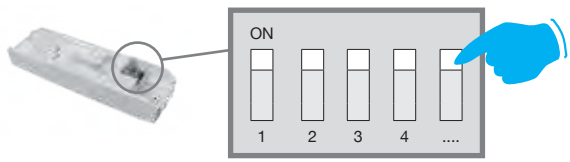

ADAPT THE CURRENT TO ACHIEVE OPTIMAL LUMINOUS FLUX

DIP SWITCH SETTING: the fixture comes with a *DIP SWITCH* driver for **THE SETTING OF THE OUTPUT CURRENT**. In this way you, can **ENSURE THE BEST LUMINOUS FLUX** for any lighting design.

The possibility to choose the correct drive current for LEDs will allow you to have the right power under specific design conditions. Using a lower current will improve the efficiency of fixtures and therefore increase energy savings, whilst a higher current will result in a higher light flux so that you can reduce the number of fixtures.



GENERAL CHARACTERISTICS

Housing: die-cast aluminium with cooling fins.

Reflector: in high-performance silver aluminium.

Diffuser: tempered glass 4 mm thermal shock and impact resistant(UNI-EN 12150-1 : 2001).

Coating: the fully automated powder-coating cycle involves a polyester-based, salt-spray corrosion-resistant and UV-stabilised paint.

Upon request: protective coating recommended for marine environments within 5 km of the sea.

LED: power factor ≥0.9.
Luminous flux maintenance 90%: 50.000h (L90B10).
Luminous flux maintenance 70%: 100.000h (L70B50).

RGBW
DMX RDM

Elfo is also available in the RGBW - DMX/RDM version (see chapter *Lighting management systems - DMX solution for LED RGBW*).

ACCESSORIES

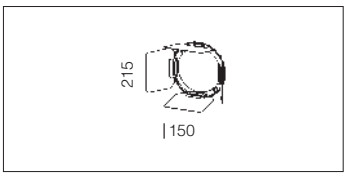

acc. 187 shutter	
black	995747-00
Made of powder-coated steel. To direct the light beam.	

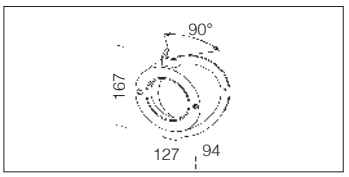

acc. 116 corner support	
black	991332-00
In fibreglass nylon. To install Elfo on a corner.	

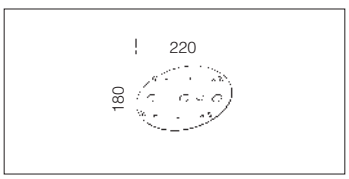

acc. 188 plate	
black	995748-00
Made of steel. To be used with acc. 120 for pole installation.	

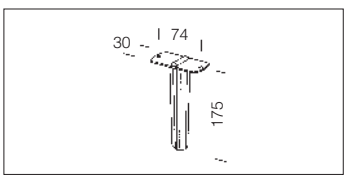

acc. 119 spike	
black	991335-00
In fiber glass nylon. For planting Elfo into the ground.	

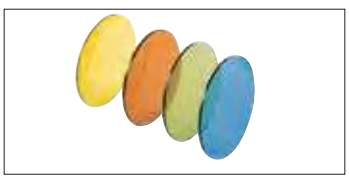

acc. 189 coloured filter - FS	
blue	995749-00
red	995750-00
green	995751-00
yellow	995752-00
We recommend use with art. 1564.	

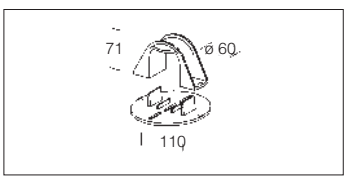

acc. 120 pole support	
black	991336-00
In fibreglass nylon. To apply Koala on any Ø 60 pole in any position.	

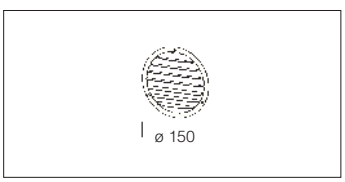

acc. 190 louvre	
black	995753-00
Made of steel. To reduce glare effects and direct the light beam.	

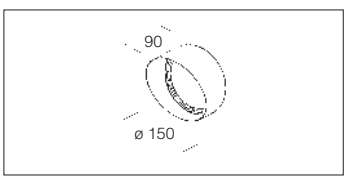

acc. 186 conveyor	
black	995746-00
Made of aluminium. Used for conveying the light beam in a single direction.	

IP65 IK08

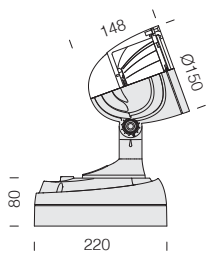



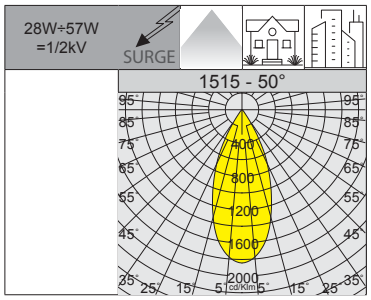

RG0 Ethr
U.V.
180°
LOW FLICKER
2200K
4000K

LED: power factor ≥0.9.
Luminous flux maintenance 90%: 50.000h (L90B10).
Luminous flux maintenance 70%: 100.000h (L70B50).

1515 Elfo - DIP SWITCH - FL

		CLD				LUMEN OUTPUT (tq= 25 °C)
LED	couleur	weight	code	I out	W tot	K - ølm - CRI
COB	grey	2.60	432836-00	***900***	**49**	4000K - 5700lm - CRI 80 - 50°
	graphite		432837-00			

DIP SWITCH SETTING		
		LUMEN OUTPUT (tq= 25 °C)
I out	W tot	K - ølm - CRI - degrees
500	**26**	4000K - 3280lm - CRI 80 - 50°
700	***37***	4000K - 4515lm - CRI 80 - 50°
900	***49***	*4000K - 5700lm - CRI 80 - 50°*

1515 Elfo AMBER - FL

		CLD			LUMEN OUTPUT (tq= 25 °C)
LED	couleur	weight	code	W tot	K - ølm - CRI
COB	grey	2.60	422392-73	**28**	2200K - 2397lm - **AMBER** - 50°
	graphite		422393-73		
COB	grey	2.60	422390-73	**42**	2200K - 3710lm - **AMBER** - 50°
	graphite		422391-73		
COB	grey	2.60	432836-73	**57**	2200K - 5200lm - **AMBER** - 50°
	graphite		432837-73		

Note: when ordering, make sure you select the **AMBER LED** type best suited for your lighting design and installation needs.

IP65 IK08

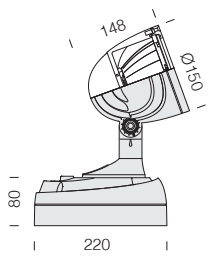



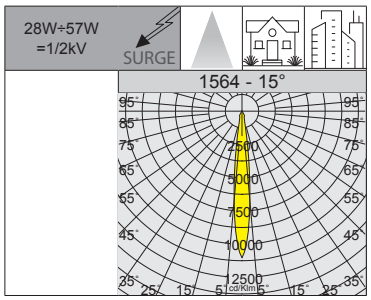

RG1
U.V.
180°
LOW FLICKER
2200K
4000K

LED: power factor ≥0.9.
Luminous flux maintenance 90%: 50.000h (L90B10).
Luminous flux maintenance 70%: 100.000h (L70B50).

1564 Elfo - DIP SWITCH - FS

		CLD				LUMEN OUTPUT (tq= 25 °C)
LED	couleur	weight	code	I out	W tot	K - ølm - CRI
COB	grey	2.60	432838-00	***900***	**49**	4000K - 5540lm - CRI 80 - 15°
	graphite		432839-00			

DIP SWITCH SETTING		
		LUMEN OUTPUT (tq= 25 °C)
I out	W tot	K - ølm - CRI - degrees
500	**26**	4000K - 3190lm - CRI 80 - 15°
700	***37***	4000K - 4390lm - CRI 80 - 15°
900	***49***	*4000K - 5540lm - CRI 80 - 15°*

1564 Elfo AMBER - FS

		CLD			LUMEN OUTPUT (tq= 25 °C)
LED	couleur	weight	code	W tot	K - ølm - CRI
COB	grey	2.60	422396-73	**28**	2200K - 2373lm - **AMBER** - 15°
	graphite		422397-73		
COB	grey	2.60	422394-73	**42**	2200K - 4096lm - **AMBER** - 15°
	graphite		422395-73		
COB	grey	2.60	432838-73	**57**	2200K - 5740lm - **AMBER** - 15°
	graphite		432839-73		

Note: when ordering, make sure you select the **AMBER LED** type best suited for your lighting design and installation needs.



RG0 Ethr

U.V.

180°

LOW FLICKER

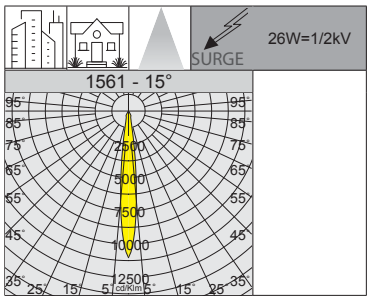

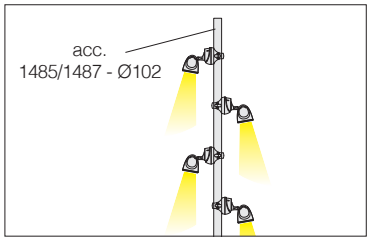



IP65 IK08

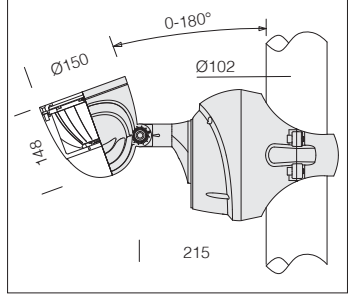

LED: power factor ≥0.9.
Luminous flux maintenance 90%: 50.000h (L90B10).
Luminous flux maintenance 70%: 100.000h (L70B50).

1561 Elfo - DIP SWITCH - FS

		CLD CELL				LUMEN OUTPUT (tq= 25 °C)
LED	colour	weight	code	I out	W tot	K - ølm - CRI - degrees
COB	grey	3.80	422398-00	***500***	**26**	4000K - 3190lm - CRI 80 - 15°

DIP SWITCH SETTING		
		LUMEN OUTPUT (tq= 25 °C)
I out	W tot	K - ølm - CRI - degrees
500	***26***	*4000K - 3190lm - CRI 80 - 15°*
700	***37***	4000K - 4390lm - CRI 80 - 15°
900	**49**	4000K - 5540lm - CRI 80 - 15°

IP65 IK08

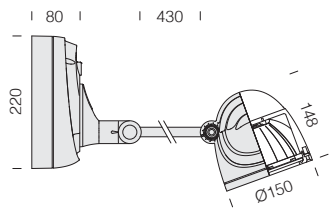



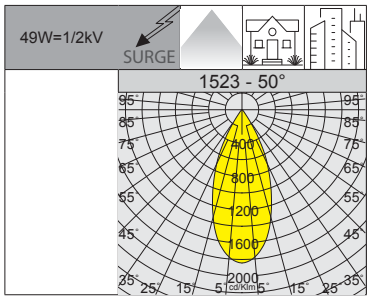

RGO Ethr · U.V. · 180° · LOW FLICKER

LED: power factor ≥0.9.
Luminous flux maintenance 90%: 50.000h (L90B10).
Luminous flux maintenance 70%: 100.000h (L70B50).

1523 Elfo - DIP SWITCH - with adjustable arm

		CLD				LUMEN OUTPUT (tq= 25 °C)
LED	colour	weight	code	I out	W tot	K - ølm - CRI
COB	graphite	3.10	432835-00	***900***	**49**	4000K - 5700lm - CRI 80 - 50°

DIP SWITCH SETTING		
		LUMEN OUTPUT (tq= 25 °C)
I out	W tot	K - ølm - CRI - degrees
500	**26**	4000K - 3280lm - CRI 80 - 50°
700	***37***	4000K - 4515lm - CRI 80 - 50°
900	***49***	*4000K - 5700lm - CRI 80 - 50°*

IP65 IK08

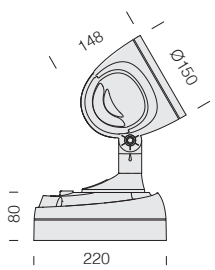

For DMX management of the luminaire, see the section about DMX controllers and accessories (*chapter Lighting management systems - DMX solution for LED RGBW).*



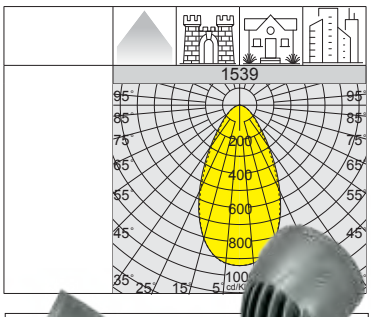



RGO Ethr · U.V. · 180° · LOW FLICKER · RGBW DMX RDM

1539 Elfo - LED RGBW DMX/RDM

		CLD DMX			LUMEN OUTPUT (tq= 25 °C)
LED	colour	weight	code	W tot	K - ølm 700mA
LED RGBW	grey	3.60	432834-00	**38**	R= 370lm - G= 665lm - B= 110lm W= 790lm (4000K)

Upon request: DMX start address 1 (1=RED 2=GREEN 3=BLUE 4=WHITE)
- Without DMX signal (loss of signal or upon start-up): functions at 100% WHITE with no light shows
- With DMX signal: stage light effects sent from the central control unit

Upon request:
1) Custom DMX addressing
2) STAND ALONE colour selection (Red, Green, Blue, White or any other colour such as Orange, Pink, Light Blue, Purple, etc.)
3) DMX PERSONALITY setting: in case of loss of DMX signal, the fixture will set itself to a random colour, which can be either the same or different from the STAND ALONE colour (to be specified upon ordering)



RG0 Ethr

U.V.

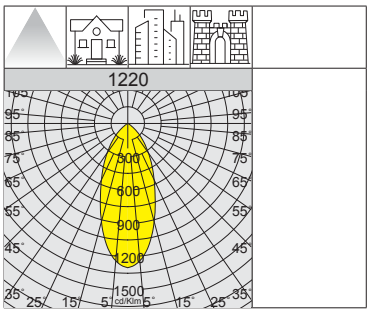





IP65IK08 ⧈

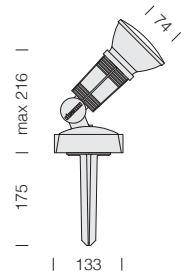

GENERAL CHARACTERISTICS

Housing/base: in fibreglass and self-extinguishing nylon.

Equipment: supplied with base and ground-sinking spike. Standard supply includes 2 cable glands.

As standard, designed to fit LED PAR 38 lamp with E27 connector.



1220 Dafne - ES			
		CLD S	
LED	colour	weight	code
LED (LAMP PAR 38)	black	0.40	431801-00
Mains voltage operated without transformer.			

ACCESSORIES

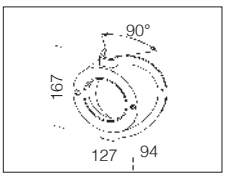

acc. 116
corner support

black	991332-00

In fibreglass nylon. To install Dafne on a corner.

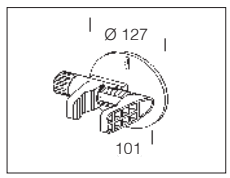

acc. 118 clamp

black	991334-00

In fiber glass nylon. Enables Dafne to be installed on different surfaces without the need to fix it definitively. Clamp opening between 20mm (min) and 60mm (max).

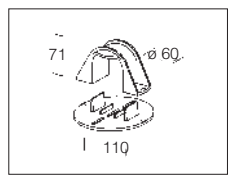

acc. 120
pole support

black	991336-00

In fibreglass nylon. To apply Dafne on any Ø 60 pole in any position.

IP67IK08

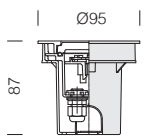



Ø90

Acc. 179 MIN 1W - MAX 17W (max 26 spotlights)

WIRE SECTION up to 50m with P=17W

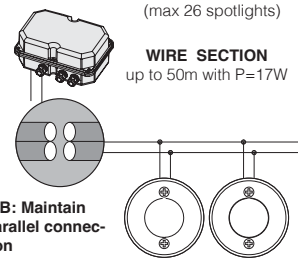

N.B: Maintain parallel connection

RG0 U.V.

GENERAL CHARACTERISTICS

Housing: vandal resistant fibre-glass nylon.

Frame: die-cast aluminium.

Diffuser: impact and thermal shock resistant tempered glass (UNI-EN 12150-1 : 2001).

1622 Starled - wall and floor version

		CLD S+L		temperature and load					LED (tj= 25 °C)
24V	colour	weight	code	Max T. on glass ta 25°	max kg load	can be walked on	can bear vehicle loads	W	K - ølm 24V - CRI
LED	grey	0.20	530690-00	30°	2000	OK	OK	**0,6**	4000K - 75lm - CRI>80
	graphite		530691-00	30°	2000	OK	OK		

acc. 179 IP67CT

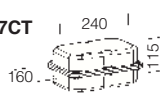

code	VOLTAGE in	VOLTAGE V_{DC} out	min. no. spotlight	max no. spotlight	W
997663-00	220-240V 50/60Hz	24V	1	26	17
Waterproof box containing the ballast.					

IP67IK08

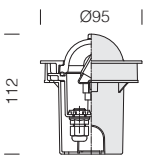

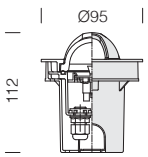

art. 1638



Ø90

Acc. 179 MIN 1W - MAX 17W (max 26 spotlights)

WIRE SECTION up to 50m with P=17W

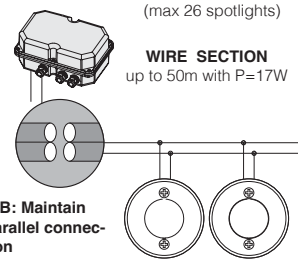

N.B: Maintain parallel connection



art. 1638

RG0 U.V.

GENERAL CHARACTERISTICS

Housing: vandal resistant fibre-glass nylon.

Frame: die-cast aluminium.

Diffuser: impact and thermal shock resistant tempered glass (UNI-EN 12150-1 : 2001).

1637 Starled - wall eyelid screen version

		CLD S+L			LED (tj= 25 °C)
LED	colour	weight	code	W	K - ølm 350mA - CRI
LED	grey	0.20	530770-00	**1**	4000K - 140lm - CRI 75
	graphite		530771-00		

1638 Starled - wall/floor cross eyelid version

		CLD S+L		temperature and load					LED (tj= 25 °C)
LED	colour	weight	code	Max T. on glass ta 25°	max kg load	can be walked on	can bear vehicle loads	W	K - ølm 350mA - CRI
LED	grey	0.20	530870-00	30°	2000	OK	OK	**1**	4000K - 140lm - CRI 75
	graphite		530871-00	30°	2000	OK	OK		

acc. 179 IP67CT

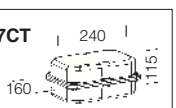

code	VOLTAGE in	CURRENT I_{DC} out	min. no. spotlig.	max no. spotlig.	W
997665-00	220-240V 50/60Hz	350mA	1	15	17
Waterproof box containing the ballast.					



INSTALLATION AND ACCESSORIES

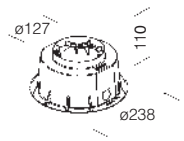

acc. 313 - outer shell

993925-00

To install Microfloor into the ground.

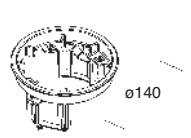

acc. 314 - chassis

993926-00

To install Microfloor on the wall.

RG0

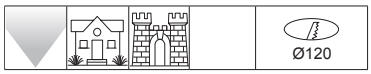





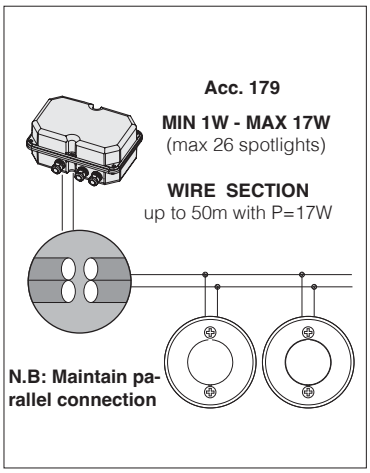



IP67IK08

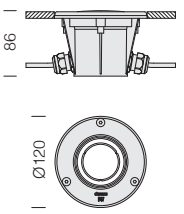

GENERAL CHARACTERISTICS

Housing: in fibreglass aluminium and stainless steel AISI 316L frame.

Diffuser: in tempered glass, resistant to thermal shock and impacts (UNI-EN 12150-1 : 2001).

1650 Microfloor

		CLD S+L		temperature and load					LED (tj= 25 °C)
24V	colour	weight	code	T. max on glass ta 15°	max kg load	can be walked on	can bear vehicle loads	W	K - ølm 24V
LED	s. steel	0.40	530810-00	30°	2000	OK	OK	**0,6**	4000K - 75lm

acc. 179
IP67CT

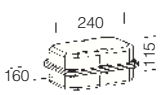

code	VOLTAGE in	VOLTAGE V_{DC} out	n. min spotlights	n. max spotlights	W
997663-00	220-240V 50/60Hz	24V	1	26	17
Waterproof box containing the ballast.					

997660-00	220-240V 50/60Hz	24V	1	26	17
Transformer, code 997660, **should be purchased if** the luminaire **is used without a watertight box.**					

IP67IK08

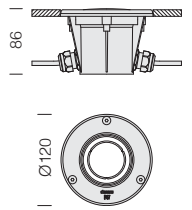



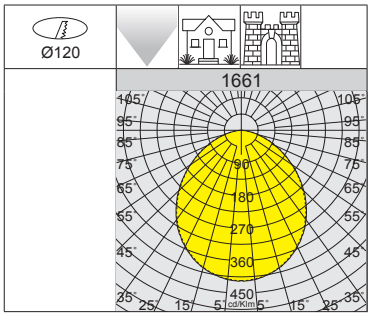



RG0

GENERAL CHARACTERISTICS

Housing: in fibreglass aluminium and stainless steel AISI 316L frame.

Diffuser: in tempered glass, resistant to thermal shock and impacts (UNI-EN 12150-1 : 2001).

1661 Microfloor - LED 230V

		CLD		temperature and load					LED (tj= 25 °C)
230V	colour	weight	code	Max T. on glass ta 25°	max kg load	can be walked on	can bear vehicle loads	W	K - ølm 230V
LED	s. steel	0.40	530816-00	30°	2000	OK	OK	**1**	4000K - 80lm - CRI 80

IP67IK08

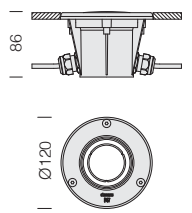







RG0

GENERAL CHARACTERISTICS

Housing: in fibreglass aluminium and stainless steel AISI 316L frame.

Diffuser: in tempered glass, resistant to thermal shock and impacts (UNI-EN 12150-1 : 2001).

1670 Microfloor - LED 230V

		CLD S+L		temperature and load					LED (tj= 25 °C)
230V	colour	weight	code	Max T. on glass ta 25°	max kg load	can be walked on	can bear vehicle loads	W	K - lm - degrees - CRI
COB GU10	s. steel	0.40	530710-00	35°	2.000	OK	OK	**6**	3000K - 600lm - 38° - CRI 80
220-240V/50-60HZ operating voltage, power supplies not require.									







RGB FULL COLOR

It is advised to install Starled according to the following information.

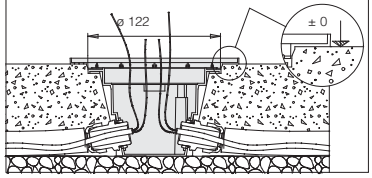

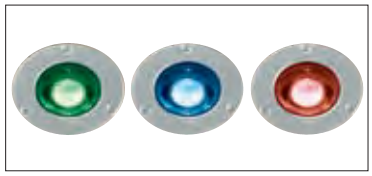

Luminaire supplied without power supplier. See the section about RGB control solutions (stand-alone or DMX/RMD) depending on intended use.



IP67IK08

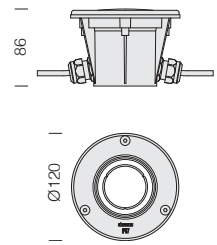

GENERAL CHARACTERISTICS

Housing: in fibreglass aluminium and stainless steel AISI 316L frame.

Diffuser: in tempered glass, resistant to thermal shock and impacts (UNI-EN 12150-1 : 2001).

1635 Microfloor - adjustable - LED RGB Fullcolor									
		S+L		**temperature and load**					**LED (tj= 25 °C)**
LED	colour	peso	code	T. max on glass ta 25°	max load kg	can be walked on	can bear vehicle loads (•)	**W**	ølm 350mA
RGB Fullcolor	s. steel	0.40	530800-00	40°	2000	ok	ok	**4,5**	105lm

1) STAND-ALONE SOLUTION

KIT acc.61 + acc.65: solution for simple installations where a stand-alone control is sufficient. It is managed using a remote control to recall preset dynamic scenes or select a determined colour and intensity.

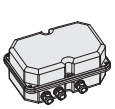

acc. 61 RGB power supplier - IP67	
25W	986512-00



acc. 65 remote control
986507-00

2) DMX/RDM SOLUTION

POWER SUPPLIER acc.63: solution for integrating Microfloor into DMX/RDM controlled installations. For DMX luminaire management see DMX controllers and accessories.

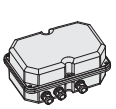

acc. 63 RGB DMX/RDM power supplier - IP67	
50W	986511-00

(For further informatio see chapter Lighting management systems - DMX solution for LED RGBW)

IP67IK08

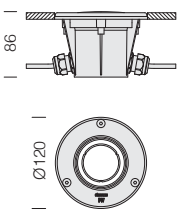



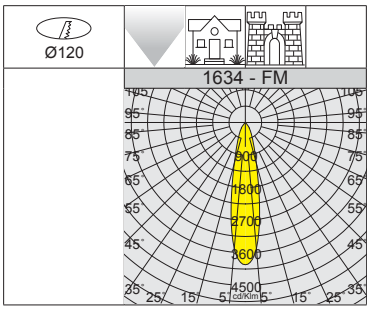

GENERAL CHARACTERISTICS

Housing: in fibreglass aluminium and stainless steel AISI 316L frame.

Diffuser: in tempered glass, resistant to thermal shock and impacts (UNI-EN 12150-1 : 2001).

1634 Microfloor - medium beam

		CLD S+L		temperature and load					LED (tj= 25 °C)
LED	colour	weight	code	T. max on glass ta 25°	max kg load	can be walked on	can bear vehicle loads	W	K - ølm - degrees - CRI
LED	s. steel	0.40	530815-00	40°	2000	OK	OK	**3,8**	4000K - 520lm - 25° - CRI 70
Upon request: 39° - 57° beam angle.									

IP67IK08

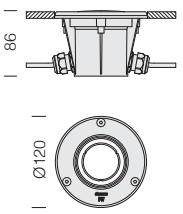



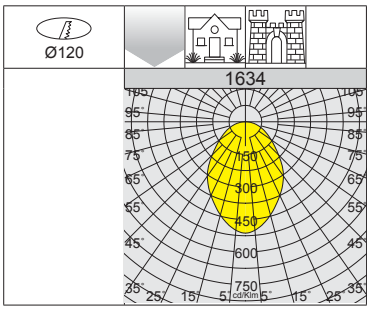

GENERAL CHARACTERISTICS

Housing: in fibreglass aluminium and stainless steel AISI 316L frame.

Diffuser: in tempered glass, resistant to thermal shock and impacts (UNI-EN 12150-1 : 2001).

1634 Microfloor - wide beam

		CLD S+L		temperature and load					LED (tj= 25 °C)
LED	colour	weight	code	T. max on glass ta 25°	max kg load	can be walked on	can bear vehicle loads	W	K - ølm 350mA - degrees - CRI
LED	s. steel	0.40	530817-00	30°	2000	OK	OK	**3**	4000K - 520lm - 120° - CRI 80

code	VOLTAGE in	CURRENT I_{DC} out	Microfloor art. 1634	min. no. spotlights	max no. spotlights
997665-00	220-240V 50/60Hz	350mA	530815-00	1	4
			530817-00	1	5

acc. 179
IP67CT

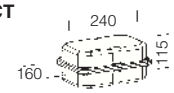





IP67 IK10 **

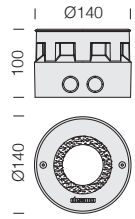

GENERAL CHARACTERISTICS
Housing: made in die-cast aluminum with stainless steel AISI 316L frame fibreglass nylon outer shell.
Diffuser: tempered shock and heat resistant glass (UNI-EN 12150-1 : 2001).

Upon request, Midifloor is available with a frame that can serve as an aesthetic finish or be used to cover mounting holes with a diameter larger than 140 mm. Please specify shape and size of the frame when placing your order, ensuring diameter does not exceed max. 165 mm.

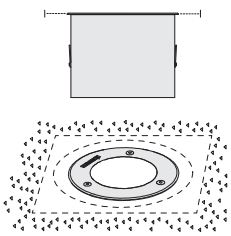

1872 Midifloor - adjustable									
		CLD S+L		temperature and load					LED (tp= 25 °C)
LED	colour	weight	code	T. max on glass	max load kg	can be walked on	can bear vehicle loads (restricted traffic areas)	W	K - ølm - degrees - CRI
COB GU10 (230V)	s. steel	1.10	530791-00	45°	3000	OK	OK	**6**	3000K - 600lm - 38° - CRI 80
LED **			530792-00	45°	3000	OK	OK	**4**	2700K - 120lm - 25° - CRI>80

1872 Midifloor COB - fixed - 46°									
		CLD S+L		temperature and load					LED (tp= 25 °C)
LED	colour	weight	code	T. max on glass	max load kg	can be walked on	can bear vehicle loads (restricted traffic areas)	W	K - ølm - degrees - CRI
COB	s. steel	1.10	530793-00	40°	3000	OK	OK	**12**	3000K - 1700lm - 46° - CRI 80

acc. 179
IP67CT

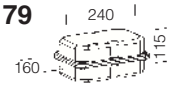

code	VOLTAGE in	for aaricle	min. no. spotlights	max no. spotlights
997661-00	220-240V 50/60Hz	530792-00	1	7
997666-00	220-240V 50/60Hz	530793-00	1	3
Waterproof box containing the ballast.				



Luminaire supplied without power supplier. See the section about RGB control solutions (stand-alone or DMX/RMD) depending on intended use.



IP67 IK10

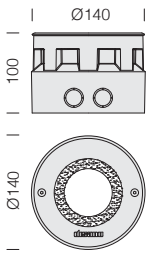

1871 Midifloor - adjustable - LED RGB Fullcolor									
		S+L		temperature and load					LED (tj= 25 °C)
LED	colour	weight	code	T. max on glass	max load kg	can be walked on	can bear vehicle loads (*)	W	ølm 350mA
RGB Fullcolor	s. steel	1.10	530790-00	40°	3000	ok	ok	**4,5**	105lm

1) STAND-ALONE SOLUTION

KIT acc.61 + acc.65: solution for simple installations where a stand-alone control is sufficient. It is managed using a remote control to recall preset dynamic scenes or select a determined colour and intensity.



acc. 61 RGB power supplier - IP67	
25W	986512-00



acc. 65 remote control
986507-00

2) DMX/RDM SOLUTION

POWER SUPPLIER acc.63: solution for integrating Microfloor into DMX/RDM controlled installations. For DMX luminaire management see DMX controllers and accessories.

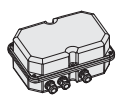

acc. 63 RGB DMX/RDM power supplier - IP67	
50W	986511-00

(For further informatio see chapter Lighting management systems - DMX solution for LED RGBW)



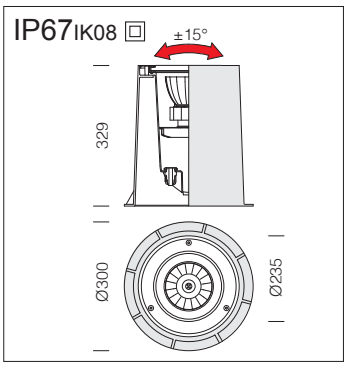

GENERAL CHARACTERISTICS

Housing: made in die-cast aluminum with stainless steel AISI 316L frame.

LED: power factor ≥0.95.
Luminous flux maintenance 90%: 50.000h (L90B10).
Luminous flux maintenance 70%: 100.000h (L70B50).



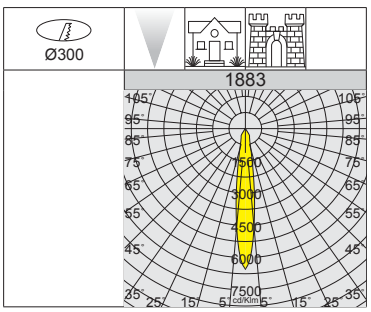

Note: when ordering, make sure you select the **AMBER LED** type best suited for your lighting design and installation needs.

RG0

2200K

3000K

4000K

RESIDENTIAL AMENITIES

1883 Minifloor - adjustable									
		CLD		temperature and load					LUMEN OUTPUT (tq= 25 °C)
LED	colour	weight	code	T. max on glass ta 15°	max load kg	can be walked on	can bear vehicle loads	W tot	K - ølm 350mA - degrees - CRI
COB	s. steel	5.00	530785-00	25°	2000	OK	OK	**12**	3000K - 1447lm - 15° - CRI 80
			530786-00	25°	2000	OK	OK		4000K - 1520lm - 15° - CRI 80
COB AMBER	s. steel	5.00	530785-73	25°	2000	OK	OK		2200K - 1493lm - 15° - **AMBER**
Diffuser: tempered shock and heat resistant glass (UNI-EN 12150-1 : 2001).									

Upon request: version with **IP68** protection with gel watertight system at the bottom of the fixture (not suited for underwater installation) -0093.

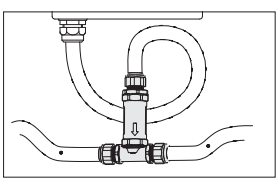

acc. 399 - Conn. for continuous line

993837-00

Connector for solid line to be used with acc 369 for continuous lines.

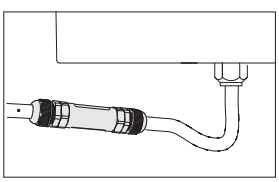

acc. 369 - Connector

993838-00

To be used for continuous lines and to achieve waterproof connection.



OTHER CHARACTERISTICS

Installation: the fixture was designed for the installation on the ground with an outer shell where it can be rotated by 30° step angle.

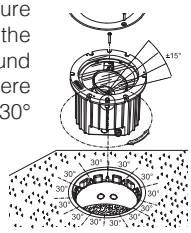

The luminaire can be walked on and can bear vehicle loads.

The masonry must be able to support a load of 4000 kg without strain. As the bottom is open to allow for draining, a gravel bed should be prepared at the time of installation. The electric gear is
inside the luminaire.

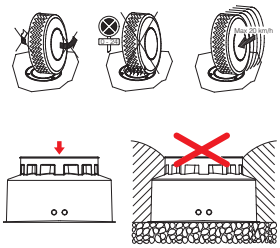

OPTICAL ACCESSORIES FOR FIXED AND ADJUSTABLE FLOOR/FLOOR TOTAL INOX SPOTLIGHT



acc. 541 alveolar screen	acc. 542 prismatic slab	acc. 543 frosted slab	acc. 544 dome-shaped	acc. 545 clear slab
993980-00	993981-00	993982-00	993983-00	993984-00

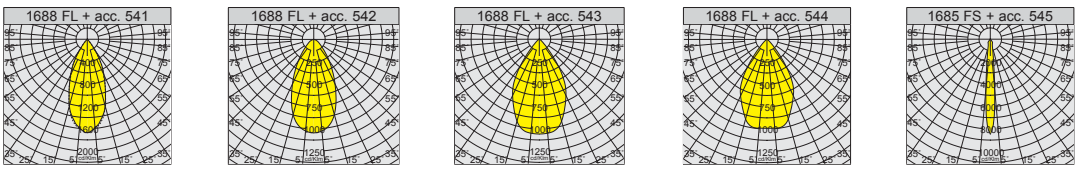

GENERAL CHARACTERISTICS

Housing/Chassis: in die-cast aluminium.

Frame: in AISI 316L stainless steel.

Outer shell: in black nylon reinforced fibreglass.

Reflector: fixed and revolving with max. 0/+15° graduated brackets, in metalized polycarbonate.

Diffuser: 15 mm tempered glass, resistant to thermal shocks, impacts and static load.

Equipment: silicone rubber seal and screws in anti-grip stainless steel.

LED: power factor ≥0.95.
Luminous flux maintenance 90%: 50.000h (L90B10).
Luminous flux maintenance 70%: 100.000h (L70B50).

RGBW DMX RDM Floor is also available in the RGBW - DMX/RDM version (see chapter *Lighting management systems - DMX solution for LED RGBW*).

UPON REQUEST

Light shaper for sharp, narrow beam light emissions, ideal for architectural lighting applications.



IP68IK10

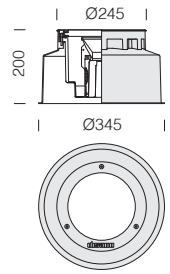



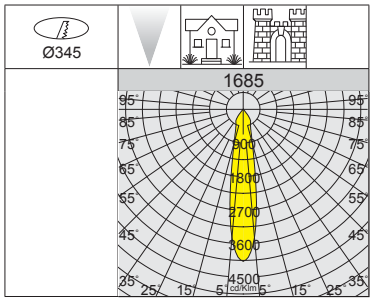

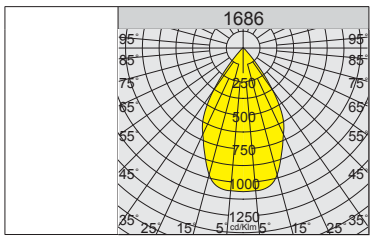

RG0 Ethr · U.V. · 2200K · 4000K

Upon request: 1685 FS	
W tot	K - ølm 450mA - gradi - CRI
16	4000K - 2120lm - 18° - CRI 80

Upon request: 1686 FL	
W tot	K - ølm 450mA - gradi - CRI
16	4000K - 2175lm - 18° - CRI 80

1685 Floor - fixed - FS

		CLD		temperature and load						LUMEN OUTPUT (tq= 25 °C)
LED	colour	weight	code	T. max on glass ta 25°	T. max on glass ta 15°	max load kg	can be walked on	can bear vehicle loads	W tot	K - ølm 700mA - degrees - CRI
COB	s. steel	4.10	530407-00	50°	40°	4000	OK	OK	**26**	4000K - 3220lm - 19° - CRI 80
*** COB AMBER**			530407-73	50°	40°	4000	OK	OK		2200K - 2272lm - 19° - **AMBER**

1686 Floor - fixed - FL

		CLD		temperature and load						LUMEN OUTPUT (tq= 25 °C)
LED	colour	weight	code	T. max on glass ta 25°	T. max on glass ta 15°	max load kg	can be walked on	can bear vehicle loads	W tot	K - ølm 700mA - degrees - CRI
COB	s. steel	4.10	530417-00	50°	40°	4000	OK	OK	**26**	4000K - 3310lm - 60° - CRI 80
*** COB AMBER**			530417-73	50°	40°	4000	OK	OK		2200K - 2367lm - 60° - **AMBER**

IP68IK10

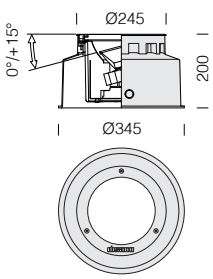



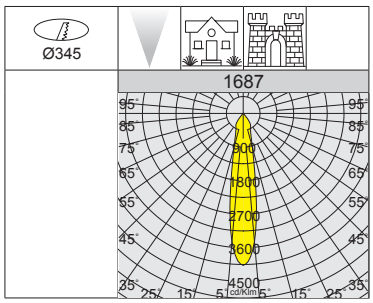

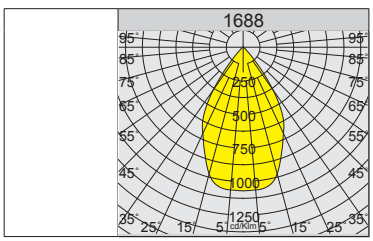

RG0 Ethr · U.V. · 2200K · 4000K

Upon request: 1687 FS	
W tot	K - ølm 450mA - gradi - CRI
16	4000K - 2120lm - 60° - CRI 80

Upon request: 1688 FL	
W tot	K - ølm 450mA - gradi - CRI
16	4000K - 2175lm - 60° - CRI 80

1687 Floor - adjustable - FS

		CLD		temperature and load						LUMEN OUTPUT (tq= 25 °C)
LED	colour	weight	code	T. max on glass ta 25°	T. max on glass ta 15°	max load kg	can be walked on	can bear vehicle loads	W tot	K - ølm 700mA - degrees - CRI
COB	s. steel	4.10	530427-00	50°	40°	4000	OK	OK	**26**	4000K - 3220lm - 19° - CRI 80
*** COB AMBER**			530427-73	50°	40°	4000	OK	OK		2200K - 2272lm - 19° - **AMBER**

1688 Floor - adjustable - FL

		CLD		temperature and load						LUMEN OUTPUT (tq= 25 °C)
LED	colour	weight	code	T. max on glass ta 25°	T. max on glass ta 15°	max load kg	can be walked on	can bear vehicle loads	W tot	K - ølm 700mA - degrees - CRI
COB	s. steel	4.10	530437-00	50°	40°	4000	OK	OK	**26**	4000K - 3310lm - 60° - CRI 80
*** COB AMBER**			530437-73	50°	40°	4000	OK	OK		2200K - 2367lm - 60° - **AMBER**

*** Note:** when ordering, make sure you select the **AMBER LED** type best suited for your lighting design and installation needs.











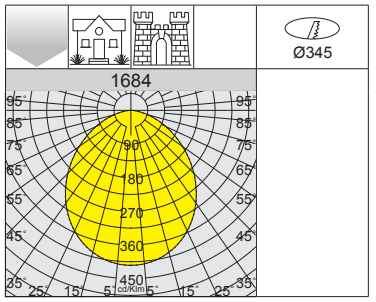



IP68IK10

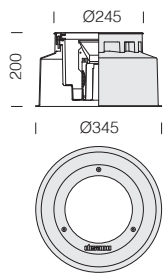

LED: power factor ≥0.95.
Luminous flux maintenance 90%: 50.000h (L90B10).
Luminous flux maintenance 70%: 100.000h (L70B50).

1684 Floor - fixed - matt glass										
		CLD		**temperature and load**						**LUMEN OUTPUT (tq= 25 °C)**
LED	colour	weight	code	T. max on glass		max load kg	can be walked on	can bear vehicle loads	**W tot**	K - ølm 350mA - CRI
				ta 25°	ta 15°					
COB	s. steel	4.10	530401-00	50°	40°	4000	OK	OK	**14**	4000K - 1315lm - CRI 80
			530401-39	50°	40°	4000	OK	OK		3000K - 1223lm - CRI 80







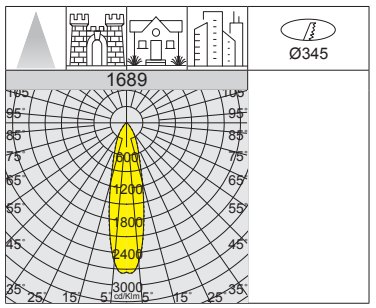





IP68IK10

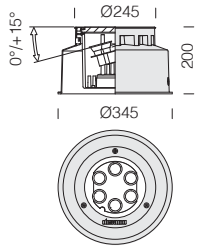

For DMX management of the luminaire, see the section about DMX controllers and accessories (*chapter Lighting management systems - DMX solution for LED RGBW).*

1689 Floor - adjustable - LED RGBW DMX/RDM										
		CLD DMX		**temperature and load**						**LUMEN OUTPUT (tq= 25 °C)**
LED	colour	weight	code	T. max on glass		max load kg	can be walked on	can bear vehicle loads	**W tot**	ølm - degrees
				ta 25°	ta 15°					
LED RGBW	s. steel	6.30	530540-00	40°	30°	4000	OK	OK	**max. 50**	R= 387lm - G= 604lm - B= 137lm W= 630lm (4000K) - 26°

Upon request: DMX start address 1 (1=RED 2=GREEN 3=BLUE 4=WHITE)
- Without DMX signal (loss of signal or upon start-up): functions at 100% WHITE with no light shows
- With DMX signal: stage light effects sent from the central control unit

Upon request:
1) Custom DMX addressing
2) STAND ALONE colour selection (Red, Green, Blue, White or any other colour such as Orange, Pink, Light Blue, Purple, etc.)
3) DMX PERSONALITY setting: in case of loss of DMX signal, the fixture will set itself to a random colour, which can be either the same or different from the STAND ALONE colour (to be specified upon ordering)

GENERAL CHARACTERISTICS

Housing/Outer shell: in AISI 304L stainless steel.

Frame: in AISI 316L stainless steel.

Reflector: revolving with max. 0/+15° graduated brackets, in metalized polycarbonate.

Diffuser: 15 mm tempered glass, resistant to thermal shocks, impacts and static load.

Upon request, Floor TOTAL INOX is available with a frame that can serve as an aesthetic finish or be used to cover mounting holes with a diameter larger than 240 mm. Please specify shape and size of the frame when placing your order, ensuring diameter does not exceed max. 260 mm.

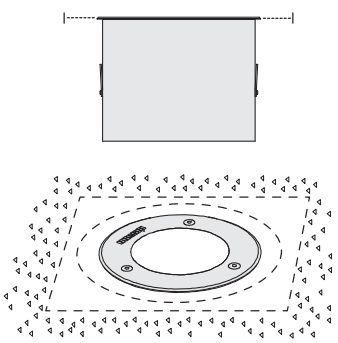



IP68 IK10

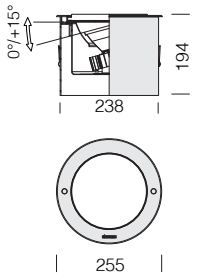

LED: power factor ≥0.95.
Luminous flux maintenance 90%: 50.000h (L90B10).
Luminous flux maintenance 70%: 100.000h (L70B50).



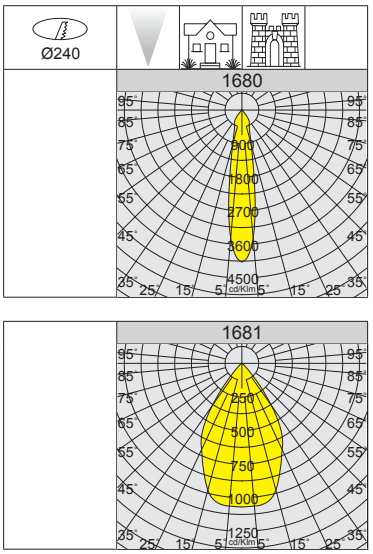

RG0 Ethr
U.V.
2200K
4000K

RESIDENTIAL AMENITIES

1680 Floor TOTAL INOX - adjustable - FS									
		CLD		temperature and load					LUMEN OUTPUT (tq= 25 °C)
LED	colour	weight	code	T. max on glass ta 25°	T. max on glass ta 15°	max load kg	can be walked on	W tot	K - ølm 700mA - degrees - CRI
COB	s. steel	4.40	530408-00	50°	40°	2000	OK	**26**	4000K - 3220lm - 19° - CRI 80
*** COB AMBER**			530408-73	50°	40°	2000	OK		2200K - 2272lm - 19° - **AMBER**

1681 Floor TOTAL INOX - adjustable - FL									
		CLD		temperature and load					LUMEN OUTPUT (tq= 25 °C)
LED	colour	weight	code	T. max on glass ta 25°	T. max on glass ta 15°	max load kg	can be walked on	W tot	K - ølm 700mA - degrees - CRI
COB	s. steel	4.40	530418-00	50°	40°	2000	OK	**26**	4000K - 3310lm - 60° - CRI 80
*** COB AMBER**			530418-73	50°	40°	2000	OK		2200K - 2367lm - 60° - **AMBER**

*** Note:** when ordering, make sure you select the **AMBER LED** type best suited for your lighting design and installation needs.







IP66IK10

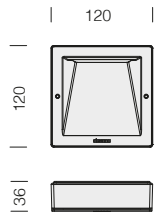

GENERAL CHARACTERISTICS

Housing: in die-cast aluminium.

Diffuser: in matt polycarbonate.

Coating: the fully automated powder-coating cycle involves a polyester-based, salt-spray corrosion-resistant and UV-stabilised paint.

Upon request: protective coating recommended for marine environments within 5 km of the sea.

LED: power factor >0.9.
Luminous flux maintenance 90%: 50.000h (L90B10).
Luminous flux maintenance 70%: 100.000h (L70B50).

1213 Pocket small - wall

		CLD			LUMEN OUTPUT (tq= 25 °C)
LED	colour	weight	code	W tot	K - ølm - CRI
COB	RAL 9016	0.60	431610-00	**6**	4000K - 430lm - CRI>80
	RAL 9005		431611-00		
COB	RAL 9016	0.60	431610-39	**6**	3000K - 409lm - CRI>80
	RAL 9005		431611-39		

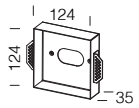

acc. 308 - outer shell

145521-00

To install Pocket small on the plaster-board wall.



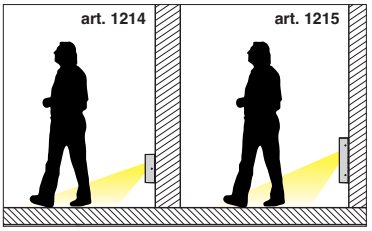



IP65IK08

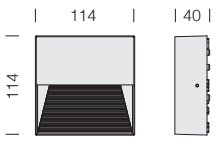

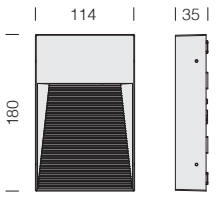

GENERAL CHARACTERISTICS

Housing: in die-cast aluminium.

Diffuser: glass, resistant to impact and thermal shock.

Coating: the fully automated powder-coating cycle involves a polyester-based, salt-spray corrosion-resistant and UV-stabilised paint.

LED: power factor >0.9.
Luminous flux maintenance 90%: 50.000h (L90B10).

Upon request: RAL 9016 white version available.

1214 Pocket 1 - square

		CLD			LUMEN OUTPUT (tq= 25 °C)
LED	colour	weight	code	W tot	K - ølm - CRI
SMD	RAL 9005	0.40	431613-00	**5**	3000K - 170lm - CRI>80

1215 Pocket 2 - rectangular

		CLD			LUMEN OUTPUT (tq= 25 °C)
LED	colore	weight	code	W tot	K - ølm - CRI
SMD	RAL 9005	0.50	431615-00	**5**	3000K - 170lm - CRI>80

IP65IK08

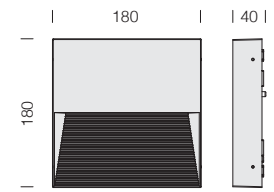





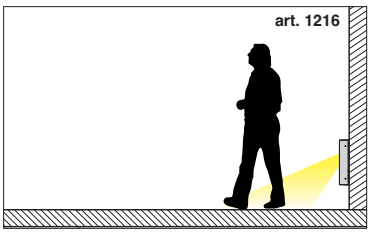

RGO U.V.

GENERAL CHARACTERISTICS

Housing: in die-cast aluminium.

Diffuser: glass, resistant to impact and thermal shock.

Coating: the fully automated powder-coating cycle involves a polyester-based, salt-spray corrosion-resistant and UV-stabilised paint.

LED: power factor >0.9.
Luminous flux maintenance 90%: 50.000h (L90B10).

Upon request: RAL 9016 white version available.

1216 Pocket 3 - square - wall

		CLD			LUMEN OUTPUT (tq= 25 °C)
LED	colour	weight	code	W tot	K - ølm - CRI
SMD	RAL 9005	0.80	431617-00	**8**	3000K - 320lm - CRI>80

IP65IK08

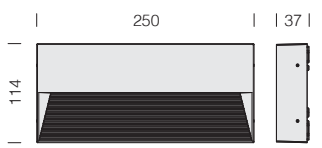





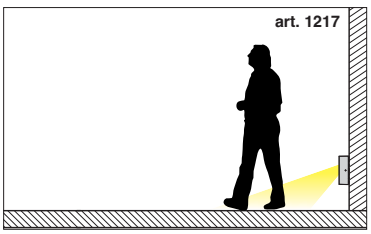

RGO U.V.

GENERAL CHARACTERISTICS

Housing: in die-cast aluminium.

Diffuser: glass, resistant to impact and thermal shock.

Coating: the fully automated powder-coating cycle involves a polyester-based, salt-spray corrosion-resistant and UV-stabilised paint.

LED: power factor >0.9.
Luminous flux maintenance 90%: 50.000h (L90B10).

Upon request: RAL 9016 white version available.

1217 Pocket 4 - rectangular - wall

		CLD			LUMEN OUTPUT (tq= 25 °C)
LED	colour	weight	code	W tot	K - ølm - CRI
SMD	RAL 9005	0.80	431619-00	**10**	3000K - 450lm - CRI>80



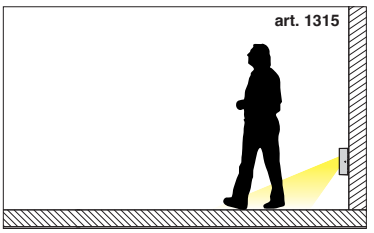



IP65IK08

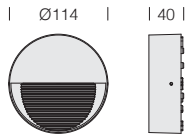

GENERAL CHARACTERISTICS

Housing: in die-cast aluminium.

Diffuser: glass, resistant to impact and thermal shock.

Coating: the fully automated powder-coating cycle involves a polyester-based, salt-spray corrosion-resistant and UV-stabilised paint.

LED: power factor >0.9.
Luminous flux maintenance 90%: 50.000h (L90B10).

Upon request: RAL 9016 white version available.

1315 Pocket 5 ROUND - wall

		CLD			LUMEN OUTPUT (tq= 25 °C)
LED	colour	weight	code	W tot	K - ølm - CRI
SMD	RAL 9005	0.40	431650-00	**5**	3000K - 170lm - CRI>80



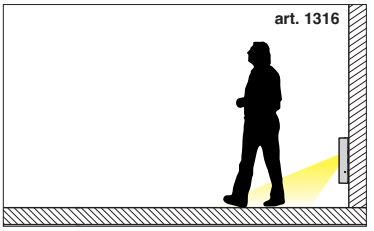



IP65IK08

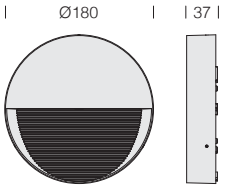

GENERAL CHARACTERISTICS

Housing: in die-cast aluminium.

Diffuser: glass, resistant to impact and thermal shock.

Coating: the fully automated powder-coating cycle involves a polyester-based, salt-spray corrosion-resistant and UV-stabilised paint.

LED: power factor >0.9.
Luminous flux maintenance 90%: 50.000h (L90B10).

Upon request: RAL 9016 white version available.

1316 Pocket 6 ROUND - wall

		CLD			LUMEN OUTPUT (tq= 25 °C)
LED	colore	weight	code	W tot	K - ølm - CRI
SMD	RAL 9005	0.70	431652-00	**8**	3000K - 320lm - CRI>80

IP65IK08

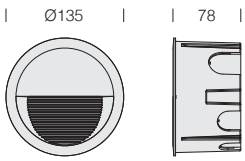





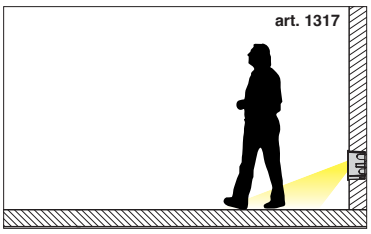

RGO

U.V.

ø130

GENERAL CHARACTERISTICS

Housing: in die-cast aluminium.

Diffuser: glass, resistant to impact and thermal shock.

Coating: the fully automated powder-coating cycle involves a polyester-based, salt-spray corrosion-resistant and UV-stabilised paint.

LED: power factor >0.9.
Luminous flux maintenance 90%: 50.000h (L90B10).

Upon request: RAL 9016 white version available.

1317 Pocket 5 ROUND - recessed

		CLD			LUMEN OUTPUT (tq= 25 °C)
LED	colour	weight	code	W tot	K - ølm - CRI
SMD	RAL 9005	0.60	431660-00	**5**	3000K - 170lm - CRI>80

IP65IK08

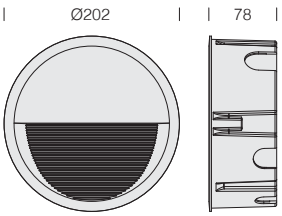





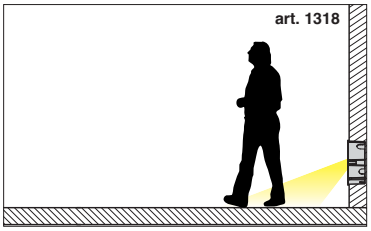

RGO

U.V.

ø196

GENERAL CHARACTERISTICS

Housing: in die-cast aluminium.

Diffuser: glass, resistant to impact and thermal shock.

Coating: the fully automated powder-coating cycle involves a polyester-based, salt-spray corrosion-resistant and UV-stabilised paint.

LED: power factor >0.9.
Luminous flux maintenance 90%: 50.000h (L90B10).

Upon request: RAL 9016 white version available.

1318 Pocket 6 ROUND - recessed

		CLD			LUMEN OUTPUT (tq= 25 °C)
LED	colour	weight	code	W tot	K - ølm - CRI
SMD	RAL 9005	0.90	431662-00	**8**	3000K - 320lm - CRI>80

RG0

U.V.

130x130



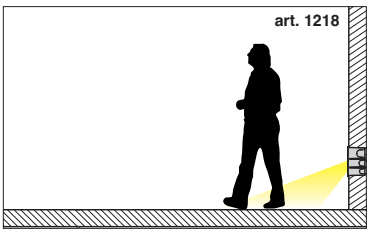

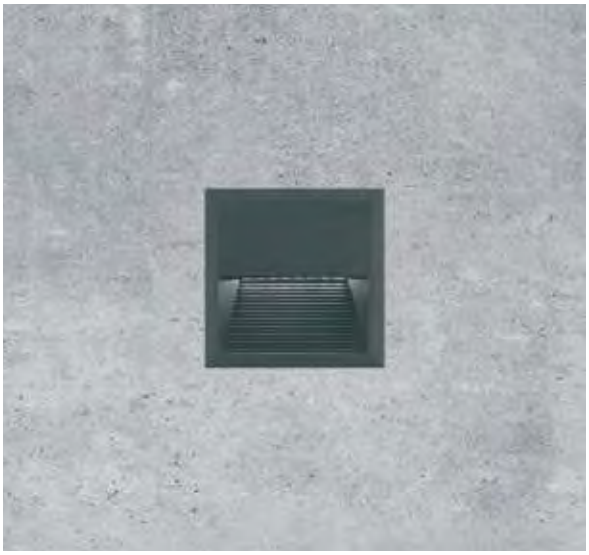

IP65IK08

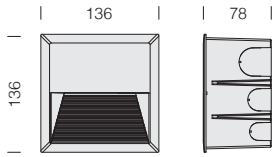

GENERAL CHARACTERISTICS

Housing: in die-cast aluminium.

Diffuser: glass, resistant to impact and thermal shock.

Coating: the fully automated powder-coating cycle involves a polyester-based, salt-spray corrosion-resistant and UV-stabilised paint.

LED: power factor >0.9.
Luminous flux maintenance 90%: 50.000h (L90B10).

Upon request: RAL 9016 white version available.

1218 Pocket 1 - square - recessed

		CLD			LUMEN OUTPUT (tq= 25 °C)
LED	colour	weight	code	W tot	K - ølm - CRI
SMD	RAL 9005	0.50	431623-00	**5**	3000K - 170lm - CRI>80

RG0

U.V.

130x196



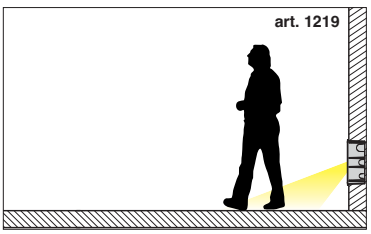



IP65IK08

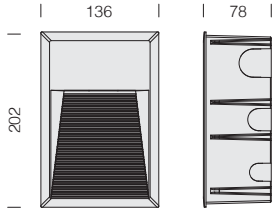

GENERAL CHARACTERISTICS

Housing: in die-cast aluminium.

Diffuser: glass, resistant to impact and thermal shock.

Coating: the fully automated powder-coating cycle involves a polyester-based, salt-spray corrosion-resistant and UV-stabilised paint.

LED: power factor >0.9.
Luminous flux maintenance 90%: 50.000h (L90B10).

Upon request: RAL 9016 white version available.

1219 Pocket 2 - rectangular - recessed

		CLD			LUMEN OUTPUT (tq= 25 °C)
LED	colour	weight	code	W tot	K - ølm - CRI
SMD	RAL 9005	0.60	431624-00	**5**	3000K - 170lm - CRI>80

IP65IK08

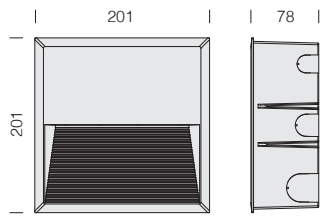

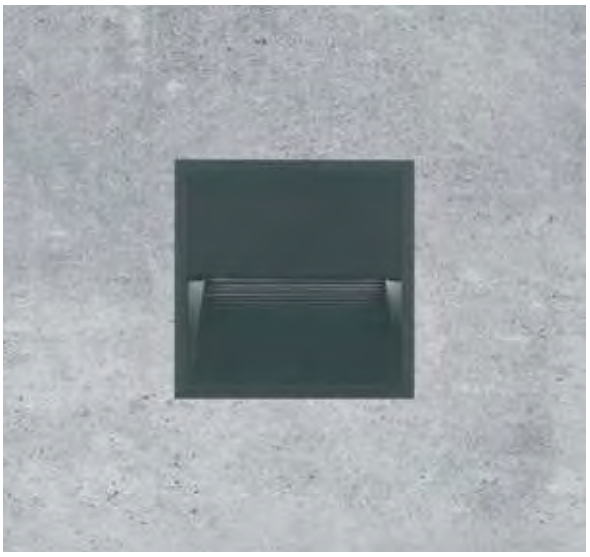



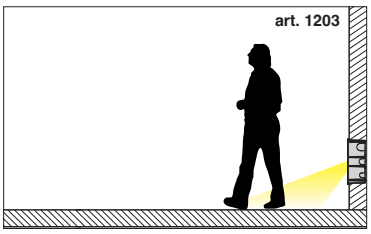

RGO U.V. 195x195

GENERAL CHARACTERISTICS

Housing: in die-cast aluminium.

Diffuser: glass, resistant to impact and thermal shock.

Coating: the fully automated powder-coating cycle involves a polyester-based, salt-spray corrosion-resistant and UV-stabilised paint.

LED: power factor >0.9.
Luminous flux maintenance 90%: 50.000h (L90B10).

Upon request: RAL 9016 white version available.

1203 Pocket 3 - square - recessed

		CLD			LUMEN OUTPUT (tq= 25 °C)
LED	colour	weight	code	W tot	K - ølm - CRI
SMD	RAL 9005	0.90	431625-00	**8**	3000K - 320lm - CRI>80

IP65IK08

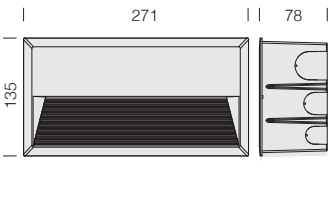





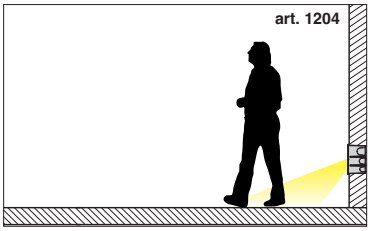

RGO U.V. 266x130

GENERAL CHARACTERISTICS

Housing: in die-cast aluminium.

Diffuser: glass, resistant to impact and thermal shock.

Coating: the fully automated powder-coating cycle involves a polyester-based, salt-spray corrosion-resistant and UV-stabilised paint.

LED: power factor >0.9.
Luminous flux maintenance 90%: 50.000h (L90B10).

Upon request: RAL 9016 white version available.

1204 Pocket 4 - rectangular - recessed

		CLD			LUMEN OUTPUT (tq= 25 °C)
LED	colour	weight	code	W tot	K - ølm - CRI
SMD	RAL 9005	0.90	431627-00	**10**	3000K - 450lm - CRI>80

RG0 U.V. 297x157

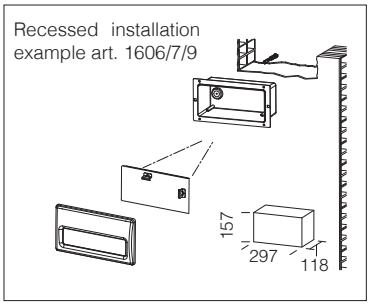

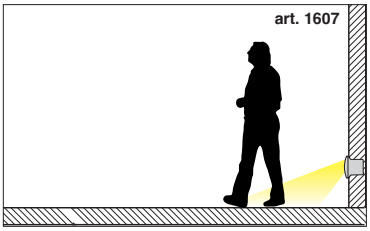



IP65 IK08

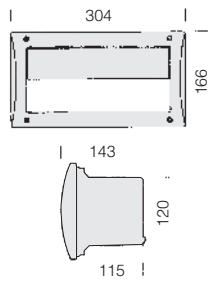

GENERAL CHARACTERISTICS

Housing: in f.g. nylon, shatterproof and UV-stabilised.

Frame: in thermoplastic material (designed for outdoor installation) UV-stabilized.

Reflector: asymmetric; in scored aluminium.

Diffuser: in scored, matt-finished, V2 polycarbonate, shatterproof, self-extinguishing, UV-stabilised.

LED: power factor ≥0.9.
Luminous flux maintenance 90%: 50.000h (L90B10).

1607 Box - asymmetric screen eyelid

		CLD			LED (tj= 25 °C)
LED	colour	weight	code	W	K - ølm 116mA - CRI
LED	grey	1.00	431735-00	**4,5**	4000K - 480lm - CRI>80

RG0 297x157

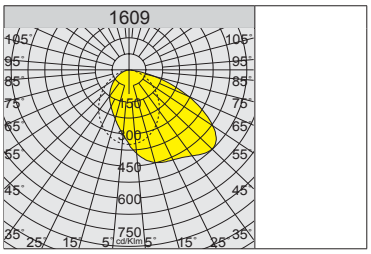

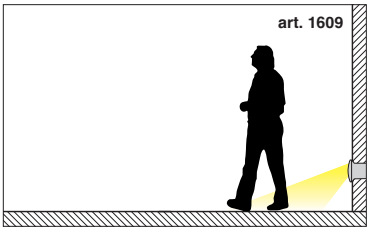



IP66 IK08

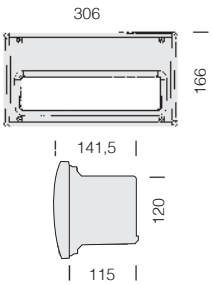

GENERAL CHARACTERISTICS

Housing: vandal resistant fibre-glass nylon.
Frame: stainless steel AISI 316.
Reflector: asymmetric; in scored aluminium.
Diffuser: tempered glass.

LED: power factor ≥0.9.
Luminous flux maintenance 90%: 50.000h (L90B10).

1609 Box 1 - asymmetric screen eyelid

		CLD			LED (tj= 25 °C)
LED	colour	weight	code	W	K - ølm 116mA - CRI
LED	inox	1.60	431770-00	**4,5**	4000K - 480lm - CRI>80

IP65IK08

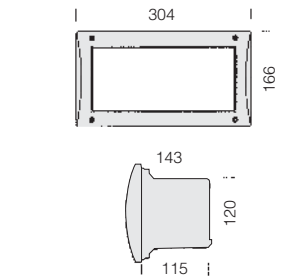





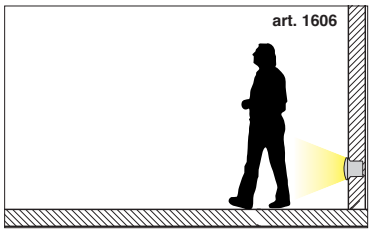

RGO U.V. 297x157

GENERAL CHARACTERISTICS

Housing: in f.g. nylon, shatterproof and UV-stabilised.

Frame: in thermoplastic material (designed for outdoor installation) UV-stabilized.

Diffuser: in scored, matt-finished, V2 polycarbonate, shatterproof, self-extinguishing, UV-stabilised.

LED: power factor ≥0.9.
Luminous flux maintenance 90%: 50.000h (L90B10).

1606 Box

		CLD			LED (tj= 25 °C)
LED	colour	weight	code	W	K - ølm 116mA - CRI
LED	grey	0.80	431635-00	**4,5**	4000K - 480lm - CRI>80

IP66IK08

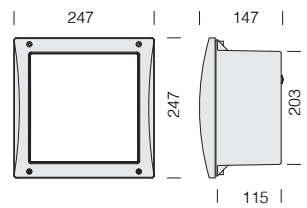





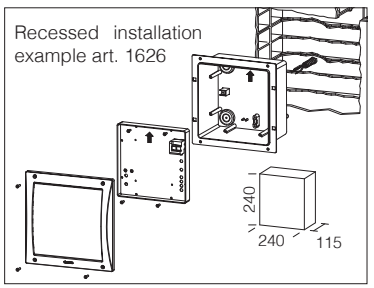

RGO U.V. 240x240

GENERAL CHARACTERISTICS

Housing: in f.g. nylon, shatterproof and UV-stabilised.

Frame: in thermoplastic material (designed for outdoor installation) UV-stabilized.

Diffuser: in scored, matt-finished, V2 polycarbonate, shatterproof, self-extinguishing, UV-stabilised.

1626 Box 2

		CLD S	
LED	colour	weight	code
LAMP E27 (MAX 10W)	grey	1.30	431640-00

As standard, designed to fit LED lamp with E27 connector.











IP54IK08

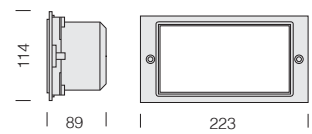

GENERAL CHARACTERISTICS

Housing: vandal resistant nylon, UV-stabilised.

Frame: die-cast aluminium.

Diffuser art. 1209: in glass.

Diffuser art. 1206: in opal plexiglass.

LED: power factor ≥0.9.
Luminous flux maintenance 90%: 50.000h (L90B10).

1209 Box - with diffuser					
		CLD			**LED (tj= 25 °C)**
230V	colour	weight	code	**W**	K - ølm 230V - CRI
LED	graphite	0.50	431002-00	**3**	4000K - 280lm - CRI 80

1206 Box - with opal diffuser			
		CLD S	
wattage	colour	weight	code
LED (LAMP E14)	graphite	0.50	431001-00

As standard, designed to fit LED lamp with E14 connector (max 5,5W - 470lm).





Self adhesive pictograms available:

EXIT **995130-00**
WC **995132-00**

IP54 IK08

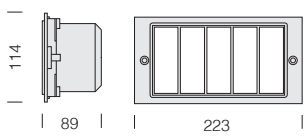



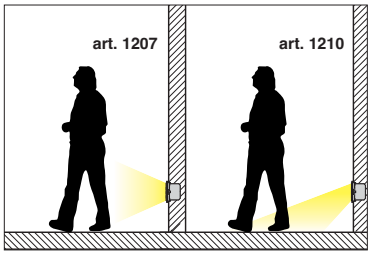



RGO

U.V.

215x110

GENERAL CHARACTERISTICS

Housing: vandal resistant nylon, UV-stabilised.

Frame: die-cast aluminium.

Diffuser art. 1210: in glass.

Diffuser art. 1207: in opal plexiglass.

Standard supply: grid with louvres.

LED: power factor ≥0.9.
Luminous flux maintenance 90%: 50.000h (L90B10).

1210 Box - asymmetric with vertical screen

		CLD			LED (tj= 25 °C)
230V	colour	weight	code	W	K - ølm 230V - CRI
LED	graphite	0.50	431502-00	**3**	4000K - 280lm - CRI 80
Upon request, versions with coloured LEDs.					

1207 Box - opal with vertical screen

		CLD S	
LED	colour	weight	code
LED (LAMP E14)	graphite	0.50	431501-00

As standard, designed to fit LED lamp with E14 connector (max 5,5W - 470lm).



IP54 IK08

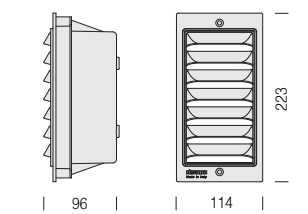

art. 1212

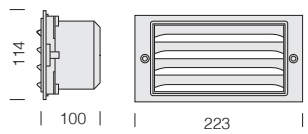

art. 1208-1211



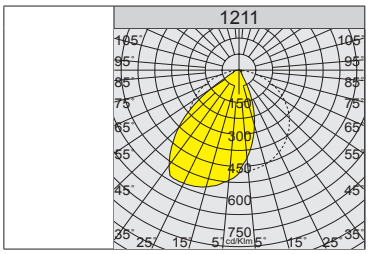



RGO

U.V.

215x110

GENERAL CHARACTERISTICS

Housing: vandal resistant nylon, UV-stabilised.

Frame: die-cast aluminium.

Diffuser art. 1211-1212: in glass.

Diffuser art. 1208: in opal plexiglass.

Standard supply: grid with louvres.

LED: power factor ≥0.9.
Luminous flux maintenance 90%: 50.000h (L90B10).

1212 Box - with vertical screen

		CLD			LED (tj= 25 °C)
230V	colour	weight	code	W	K - ølm 230V - CRI
LED	graphite	0.50	431603-00	**3**	4000K - 280lm - CRI 80

1211 Box - with horizontal screen

		CLD			LED (tj= 25 °C)
230V	colour	weight	code	W	K - ølm 230V - CRI
LED	graphite	0.50	431602-00	**3**	4000K - 280lm - CRI 80

1208 Box - opal with horizontal screen

		CLD S	
LED	colour	weight	code
LED (LAMP E14)	graphite	0.50	431601-00

As standard, designed to fit LED lamp with E14 connector (max 5,5W - 470lm).





GENERAL CHARACTERISTICS

Housing: vandal resistant fibre-glass nylon.

Frame: die-cast aluminium.

Diffuser: frosted glass, resistant to impact and thermal shock.

Coating: the fully automated powder-coating cycle involves a polyester-based, salt-spray corrosion-resistant and UV-stabilised paint.

Upon request: protective coating recommended for marine environments within 5 km of the sea.

LED: power factor ≥0.9.
Luminous flux maintenance 90%: 50.000h (L90B10).

RG0

U.V.

90x127



Recessed dimensions art. 1673

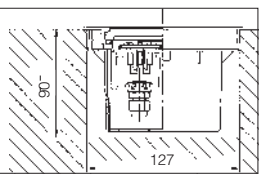



IP67 IK08

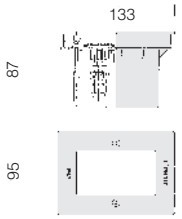

1673 Starled - LED 230V									
		CLD		temperature and load					LED (tj= 25 °C)
230V	colour	weight	code	T. max on glass ta 15°	max kg load	can be walked on	can bear vehicle loads	W	K - ølm 230V - degrees - CRI
LED	graphite	0.41	530696-00	30°	2000Kg	OK	OK	1	4000K - 80lm - 120° - CRI>80
	grey		530697-00	30°	2000Kg	OK	OK		

IP65IK08

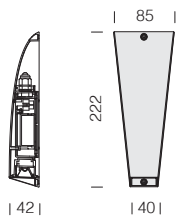



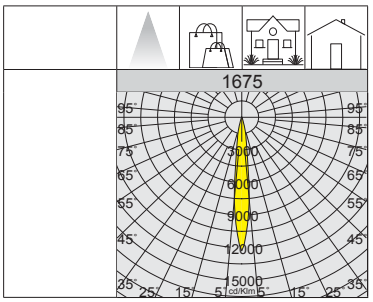

Wall version sequence installation.

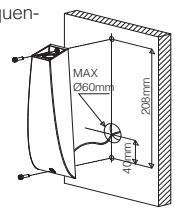

GENERAL CHARACTERISTICS

Housing: in die-cast aluminium**;** supplied with inbuilt power supply.

Coating: the fully automated powder-coating cycle involves a polyester-based, salt-spray corrosion-resistant and UV-stabilised paint.

Upon request: protective coating recommended for marine environments within 5 km of the sea.

1675 Spy

		CLD			LUMEN OUTPUT (tq= 25 °C)
LED	colour	weight	code	W tot	K - ølm (350mA) - CRI - degrees
LED	grey	0.30	530672-00	**2,5**	4000K - 100lm - CRI 80 - 10°

IP65IK08

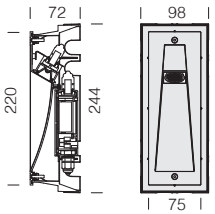



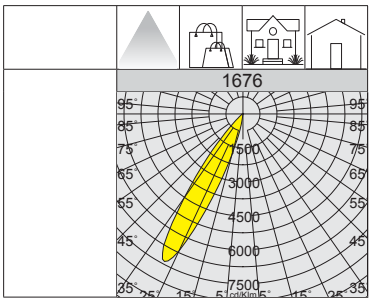

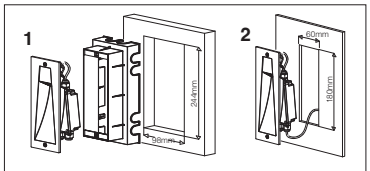

1) Wall recessed sequence with box

2) Wall recessed sequence with no box

GENERAL CHARACTERISTICS

Housing: in die-cast aluminium**;** supplied with inbuilt power supply.

Coating: the fully automated powder-coating cycle involves a polyester-based, salt-spray corrosion-resistant and UV-stabilised paint.

Upon request: protective coating recommended for marine environments within 5 km of the sea.

1676 Spy

		CLD			LUMEN OUTPUT (tq= 25 °C)
LED	colour	weight	code	W tot	K - ølm (350mA) - CRI - degrees
LED	grey	0.40	530683-00	**2,5**	4000K - 115lm - CRI 80 - 24°



GENERAL CHARACTERISTICS

Housing: extruded aluminium suitable for continuous row.

Diffuser: in tempered glass, 8 mm thick, resistant to thermal shocks, impacts, and max 2000 kg loads (UNI-EN 12150-1 : 2001). Art. 1748 with sandblasted glass.

Coating: the fully automated powder-coating cycle involves a polyester-based, salt-spray corrosion-resistant and UV-stabilised paint.

Upon request: protective coating recommended for marine environments within 5 km of the sea.

Equipment: complete with electrical cable for mains connection.

LED: luminous flux maintenance 80% 80.000h (L80B20).
Power factor ≥0.9.

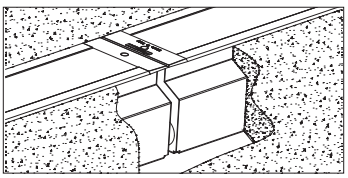

UPON REQUEST: IP68 connector for mains connection; accessory for continuous row.

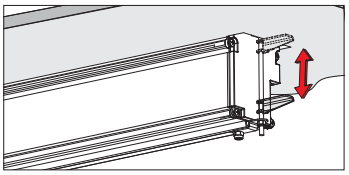

acc. 905 bracket	
s. steel	998013-00
Support for ceiling mounting. Packet containing 2 brackets.	

RG0

3000K

4000K

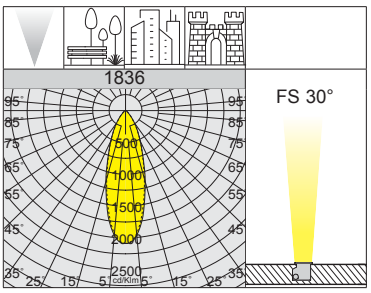

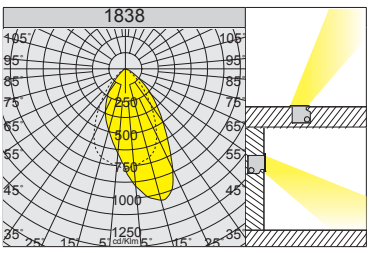



IP67 IK08

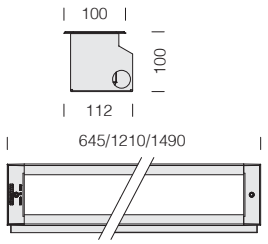

1836 Sicura FS - symmetric

			CLD		temperature and load						LUMEN OUTPUT (tq= 25 °C)
					T. max on glass						
LED	colour	L	weight	code	ta 15°	ta 25°	max load kg	can be walked on	can bear vehicle load	W tot	K - ølm - CRI - degrees
LED	grey	645	4.30	414260-00	30°	40°	2000	OK	OK	22	4000K - 3285lm - CRI>80 - 30°
				414260-39							3000K - 3121lm - CRI>80 - 30°
		1210	8.30	414261-00	30°	40°	2000	OK	OK	43	4000K - 6570lm - CRI>80 - 30°
				414261-39							3000K - 6242lm - CRI>80 - 30°
		1490	10.20	414268-00	30°	40°	2000	OK	OK	54	4000K - 8212lm - CRI>80 - 30°
				414268-39							3000K - 7801lm - CRI>80 - 30°

1838 Sicura - asymmetric - wall and floor version

			CLD		temperature and load						LUMEN OUTPUT (tq= 25 °C)
					T. max on glass						
LED	colour	L	weight	code	ta 15°	ta 25°	max load kg	can be walked on	can bear vehicle load	W tot	K - ølm - CRI
LED	grey	645	4.30	414280-00	30°	40°	2000	OK	OK	22	4000K - 2849lm - CRI>80
				414280-39							3000K - 2650lm - CRI>80
		1210	7.00	414281-00	30°	40°	2000	OK	OK	43	4000K - 5699lm - CRI>80
				414281-39							3000K - 5300lm - CRI>80
		1490	10.20	414282-00	30°	40°	2000	OK	OK	54	4000K - 7123lm - CRI>80
				414282-39							3000K - 6624lm - CRI>80

IP67IK08

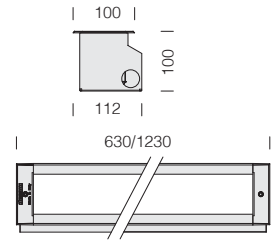



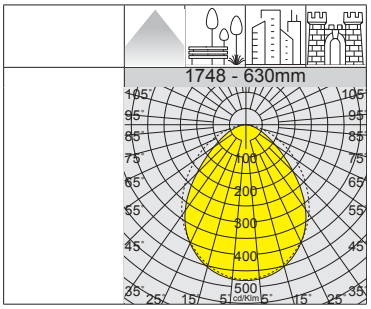

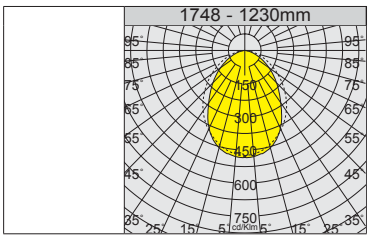

RGO

3000K

4000K

1748 Sicura - wide beam

			CLD		temperature and load						LUMEN OUTPUT (tq= 25 °C)
					T. max on glass		max load kg	can be walked on	can bear vehicle loads	W tot	
LED	colour	L	weight	code	ta 15°	ta 25°					K - ølm - CRI
LED	grey	**630**	3.90	414252-00	30°	40°	2000	OK	OK	**14**	4000K - 899lm - CRI>80
				414252-39							3000K - 836lm - CRI>80
				414254-00	30°	40°	2000	OK	OK	**28**	4000K - 1800lm - CRI>80
				414254-39							3000K - 1674lm - CRI>80
LED	grey	**1230**	7.20	414258-00	30°	40°	2000	OK	OK	**24**	4000K - 1576lm - CRI>80
				414258-39							3000K - 1466lm - CRI>80
				414259-00	30°	40°	2000	OK	OK	**48**	4000K - 3261lm - CRI>80
				414259-39							3000K - 3033lm - CRI>80

IP67IK08

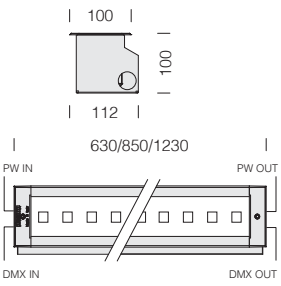

For DMX management of the luminaire, see the section about DMX controllers and accessories (*chapter Lighting management systems - DMX solution for LED RGBW).*



SICURA - RGBW - DMX/RDM (on request)	
TW (on request)	2700K - 3000K - 4000K - 5000K
Version	RGBW - TUNABLE WHITE
Standard beam	elliptic - narrow - medium - wide - asymm.

ELECTRICAL DRIVE CHARACTERISTICS	
Electrical connect.	loop in-out
Equipment	DMX/RDM or stand-alone



RGO

RGBW DMX RDM

Sicura - LED RGBW DMX/RDM

	CLD DMX								
LED	WHITE 4000K		RED		GREEN		BLUE		W tot
	ølm	w	ølm	w	ølm	w	ølm	w	
SICURA RGBW 600	1300lm	13W	260lm	12W	760lm	12W	33lm	13W	50W
SICURA RGBW 800	1740lm	17W	360lm	16W	1010lm	16W	450lm	17W	66W
SICURA RGBW 1200	2600lm	26W	520lm	24W	1520lm	24W	670lm	26W	100W

Upon request: DMX start address 1 (1=RED 2=GREEN 3=BLUE 4=WHITE)
- Without DMX signal (loss of signal or upon start-up): functions at 100% WHITE with no light shows
- With DMX signal: stage light effects sent from the central control unit

Upon request:
1) Custom DMX addressing
2) STAND ALONE colour selection (Red, Green, Blue, White or any other colour such as Orange, Pink, Light Blue, Purple, etc.)
3) DMX PERSONALITY setting: in case of loss of DMX signal, the fixture will set itself to a random colour, which can be either the same or different from the STAND ALONE colour (to be specified upon ordering)



GENERAL CHARACTERISTICS

Housing: made of nylon.

Frame: in AISI 304 stainless steel.

Outer casing: nylon outer casing.

Diffuser: tempered glass, 12mm thick, resistant to thermal shock. and mechanical stress up to 2000 Kg.

LED: luminous flux maintenance 80% 80.000h (L80B20).
Power factor ≥0.9.



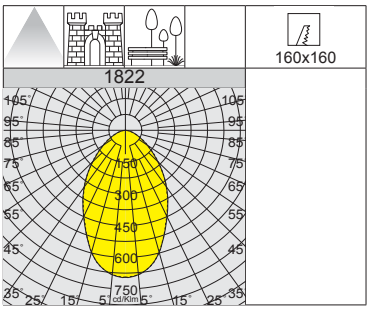



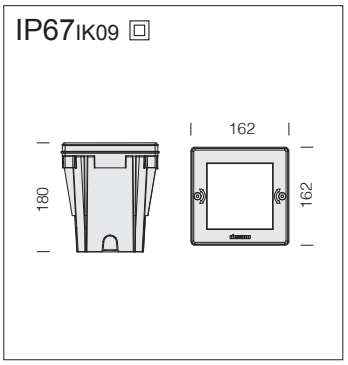

1822 Miniquadro										
		CLD		temperature and load						LED (tj= 25 °C)
230V	colour	weight	code	T. max on glass		max load kg	can be walked on	can bear vehicle loads	W	K - ølm 230V - CRI
				ta 25°	ta 15°					
LED	inox	1.60	530420-00	30°	20°	2000	OK	OK	**3**	4000K - 135lm - CRI 80

IP67IK09 ⧈

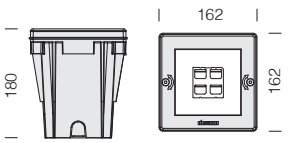



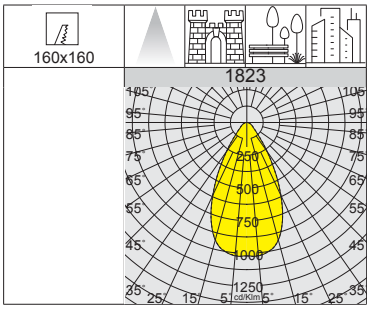

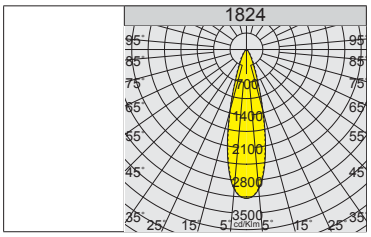

1823 Miniquadro FL - wide beam with lenses

		CLD		temperature and load						LUMEN OUTPUT (tq= 25 °C)
LED	colour	weight	code	T. max on glass ta 25°	T. max on glass ta 15°	max load kg	can be walked on	can bear vehicle loads	W tot	K - ølm 300mA - CRI
LED	inox	1.60	530425-00	30°	20°	2000	OK	OK	**9**	4000K - 985lm - CRI 80

1824 Miniquadro FS - narrow beam with lenses

		CLD		temperature and load						LUMEN OUTPUT (tq= 25 °C)
LED	colour	weight	code	T. max on glass ta 25°	T. max on glass ta 15°	max load kg	can be walked on	can bear vehicle loads	W tot	K - ølm 300mA - CRI
LED	inox	1.60	530422-00	30°	20°	2000	OK	OK	**9**	4000K - 1005lm - CRI 80

IP67IK09 ⧈

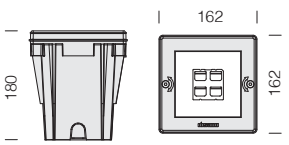



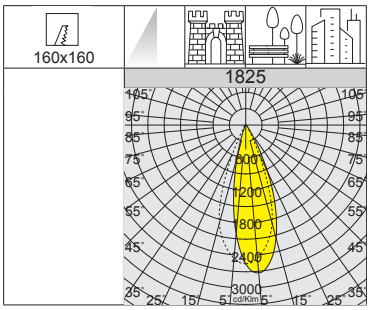

1825 Miniquadro AS - asymmetric with lenses

		CLD		temperature and load						LUMEN OUTPUT (tq= 25 °C)
LED	colour	weight	code	T. max on glass ta 25°	T. max on glass ta 15°	max load kg	can be walked on	can bear vehicle loads	W tot	K - ølm 300mA - CRI
LED	inox	1.60	530424-00	30°	20°	2000	OK	OK	**9**	4000K - 1010lm - CRI 80



VISTA 2.0



MINI ISCHIA - ISCHIA



ISEO



Vista 2.0 p. 400
Mini Ischia p. 406
Ischia p. 408
Iseo p. 418

COMO



GARDA



LOTO

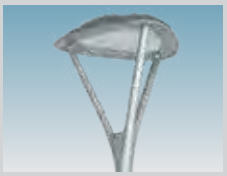

Como p. 426
Garda p. 430
Loto p. 440

BRAIES



TORPEDO 2.0



VISCONTI 2.0



Braies p. 446
Torpedo 2.0 p. 450
Visconti 2.0 p. 458

VOLO

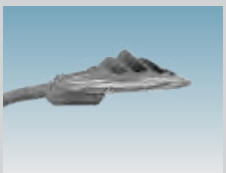

GRANADA



LUCERNA



Volo p. 466
Granada p. 472
Lucerna p. 476

AURA

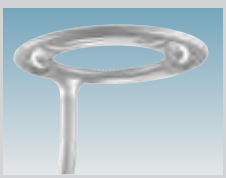

DISCO



TORCIA



Aura p. 488
Disco p. 490
Torcia p. 494

VISTA



POLAR



CLIMA



Vista p. 496
Polar p. 498
Clima p. 499

ISEO



SATURNO



CAMPANA



Iseo p. 500
Saturno p. 502
Campana p. 504



CCT SWITCH = with this integrated switch you can select the desired light colour, 2700K-3000K-4000K y 1800K-2200K.

POWER SWITCH = with this integrated switch you can select the fixture's total wattage, 25W-45W-60W.



The main feature of this fixture is the new colour-changing technology. With **two built-in switches** positioned on housing of the fixture, you can:

• select 5 different colour temperatures, adjusting to most installations:

1800K **2200K**

EWW = 1800K (extra warm white)

WW = 2200K (extra warm white)

2700K **3000K** **4000K**

WW = 2700K (warm white)

WW = 3000K (warm white)

NW = 4000K (neutral white)

• select the type of luminous flux with 3 output power ranges :

LOW	MEDIUM	HIGH
25W	45W	60W

GENERAL CHARACTERISTICS

Housing/cover: made of die-cast aluminium.

Pole connection: pressed in die-cast aluminium. Suited for poles with a diameter 42-60 mm.

Optics : made of PMMA with high temperature resistance and UV rays.

Diffuser: in transparent, vandal-resistant and V2 self-extinguishing polycarbonate, UV-stabilized.

Coating: the fully automated powder-coating cycle involves a polyester-based, salt-spray corrosion-resistant and UV-stabilised paint.

Standard supply: dedicated electronic device to protect the LED module. Supplied with waterproof connector for quick installation and complete with an air-circulation valve; external screws and bolts in stainless steel. Supplied standard with double switch to choose the colour temperature between **1800K-2200K** or **2700K-3000K-4000K** and the type of lighting for up to 3 lighting levels

SURGE

Electronic safety device to protect the LED module and the related ballast compliant with EN 61547.

LOW FLICKER

Product with a very low flicker; uniform light for greater eye protection.

LIGHTING POINT MANAGEMENT OPTIONS ON REQUEST:

Virtual Midnight order with **subcode -30** - Stand-alone system with automatic luminous flux reduction in **4 steps**.
To increase energy savings at night when there are fewer people and vehicles around, a lighting fixture can be programmed according to a specific profile (customizable on request).

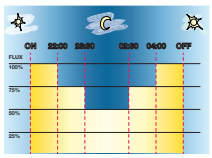

Factory settings	
Time	Flux
on ÷ 22:00	100%
22:00 ÷ 23:30	75%
23:30 ÷ 02:30	50%
02:30 ÷ 04:00	75%
04:00 ÷ off	100%

ATTENTION: *original settings and time slots for the "virtual midnight" value can be customized in up to 5 steps upon request*

Virtual midnight in 2 steps subcode -35

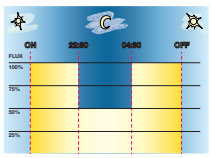

Settings upon request	
Time	Flux
on ÷ 22:30	100%
22:30 ÷ 04:30	50%
04:30 ÷ off	100%

Virtual midnight in 5 steps subcode -32

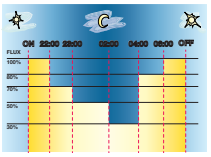

Settings upon request	
Time	Flux
on ÷ 22:00	100%
22:00 ÷ 23:00	70%
23:00 ÷ 02:00	50%
02:00 ÷ 04:00	30%
04:00 ÷ 06:00	80%
06:00 ÷ off	100%

Vista 2.0, is a luminaire with a linear, minimalist design, created to enhance the modern aesthetics of cities and green spaces. Its sleek, contemporary form integrates seamlessly into urban and residential environments, contributing to the redevelopment of public areas. Equipped with high-efficiency LEDs, it delivers excellent performance, significant energy savings, and a long service life, substantially reducing management and maintenance costs. The optics with rotosymmetric and asymmetric distributions provide uniform, well-controlled, and glare-free lighting, improving visual and user safety.
These features make this luminaire an ideal solution for lighting green spaces, pedestrian zones, residential areas, and urban spaces, helping to create welcoming, safe, and sustainable environments.

VISTA 2.0, THE IDEAL LUMINAIRE FOR GREEN SPACES, URBAN AND RESIDENTIAL AREAS: in a single body frame, you have a fully equipped luminaire designed to meet any need, including the possibility to **select the desired colour temperature in 3 power wattages**, maintaining aesthetic continuity while differentiating the amount of light emitted. These features make it the ideal choice for lighting parks, pedestrian areas, residential zones and urban public spaces.

VISTA 2.0 is available as standard with a **1800K** and **2200K** colour temperature to reproduce a cosy ambient light associated with sunset. In this way, the artificial light becomes a less invasive element in the environment, **respecting the needs of the surrounding flora and fauna**.

Research has shown that different types of lighting can significantly impact nocturnal insects, birds and other creatures that play a vital role in local ecosystems. Environmental organisations are increasingly calling for this aspect to be properly considered in the design of new lighting systems. Modern LEDs, with a reduced blue light component, provide an opportunity to create less disruptive lighting in streets or parking areas near green spaces, while offering better protection for local wildlife.

1800K 2200K

1800K - 2200K: lamps with warm light at a colour temperature of 1800K-2200K *reduces the risks of an excessive exposure to harmful blue LED light* and allows a "softer" impact on inhabited zones, especially in historic centres.







GRANADA come with colour temperatures of **2700K**, **3000K** and **4000K**. These versions are ideal for urban spaces such as public parks, squares, and historic town centres that require an illumination that enhance architectural features while ensuring pedestrian safety, visual comfort, and minimising light pollution

2700K 3000K 4000K

2700K - 3000K - 4000K: lamps with 2700K-3000K-4000K white light, instead, is the best choice for lighting up urban areas, streets, residential centres and generally all areas where this type of light guarantees greater safety and visual comfort.

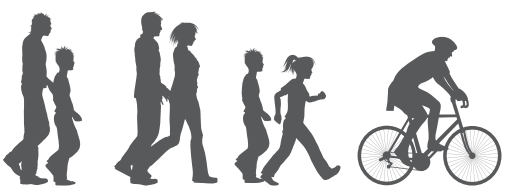





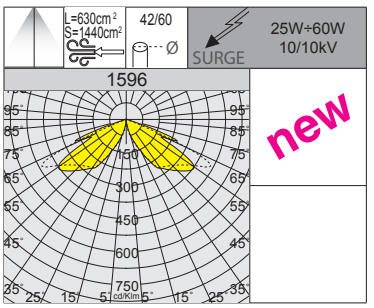

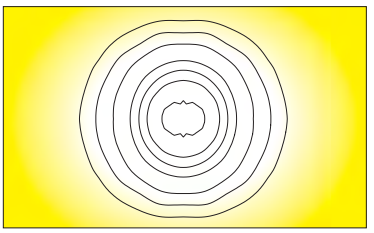



*EN IP66IK08

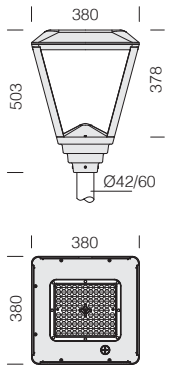

LED: power factor ≥0.9.
Luminous flux maintenance 80%: 100.000h (L80B20).

1596 Vista 2.0 - CCT 1800K-2200K / POWER SWITCH - rotosymmetric

		CLD			LUMEN OUTPUT (tq= 25 °C)
LED	colour	weight	code	W tot	K - ølm - CRI
LED	RAL 7021	5.50	422306-00	25	1800K - **2350lm** - CRI>80
					2200K - **2890lm** - CRI>80
				45	1800K - **4225lm** - CRI>80
					2200K - **5200lm** - CRI>80
				60	1800K - **5480lm** - CRI>80
					2200K - **6700lm** - CRI>80

Ideal for lighting up historic town centres, residential areas, parks, and protected areas, **while respecting the needs of nocturnal flora and fauna**.

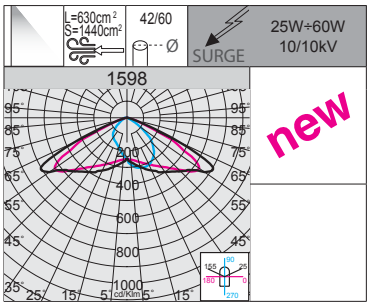

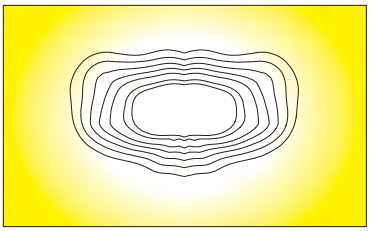



*EN IP66IK08

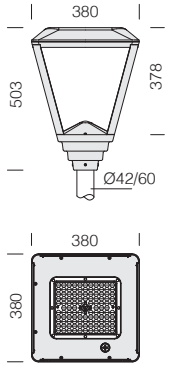

LED: power factor ≥0.9.
Luminous flux maintenance 80%: 100.000h (L80B20).

1598 Vista 2.0 - CCT 1800K-2200K / POWER SWITCH - asymmetric

		CLD			LUMEN OUTPUT (tq= 25 °C)
LED	colour	weight	code	W tot	K - ølm - CRI
LED	RAL 7021	5.50	422315-00	25	1800K - **2315lm** - CRI>80
					2200K - **2845lm** - CRI>80
				45	1800K - **4160lm** - CRI>80
					2200K - **5120lm** - CRI>80
				60	1800K - **5400lm** - CRI>80
					2200K - **6600lm** - CRI>80

Ideal for lighting up historic town centres, residential areas, parks, and protected areas, **while respecting the needs of nocturnal flora and fauna**.

*IP66IK08

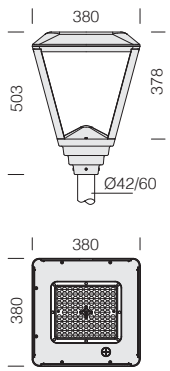

LED: power factor ≥0.9.
Luminous flux maintenance 80%: 100.000h (L80B20).



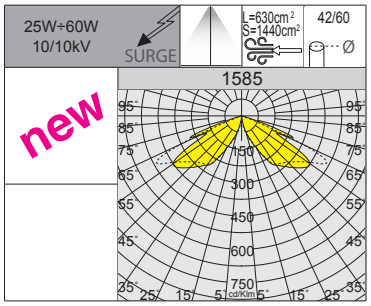

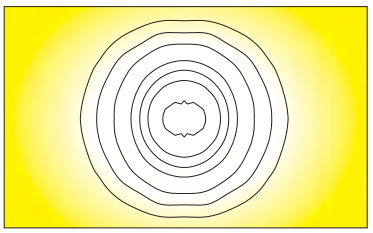

RG0 Ethr
+50 C° -30
U.V.
LOW FLICKER
CCT POWER

1585 Vista 2.0 - CCT 2700K-3000K-4000K / POWER SWITCH - rotosymmetric

		CLD			LUMEN OUTPUT (tq= 25 °C)
LED	colour	weight	code	W tot	K - ølm - CRI
LED	RAL 7021	5.50	422305-00	25	2700K - **3450lm** - CRI>80
					3000K - **3600lm** - CRI>80
					4000K - **3750lm** - CRI>80
				45	2700K - **6200lm** - CRI>80
					3000K - **6500lm** - CRI>80
					4000K - **6750lm** - CRI>80
				60	2700K - **8200lm** - CRI>80
					3000K - **8500lm** - CRI>80
					4000K - **9000lm** - CRI>80

*IP66IK08

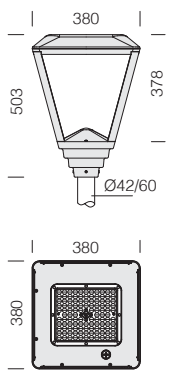

LED: power factor ≥0.9.
Luminous flux maintenance 80%: 100.000h (L80B20).



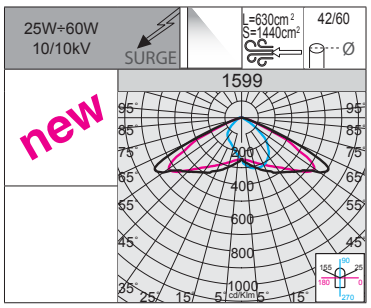

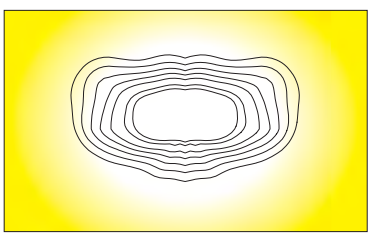

RG0 Ethr
+50 C° -30
U.V.
LOW FLICKER
CCT POWER

1599 Vista 2.0 - CCT 2700K-3000K-4000K / POWER SWITCH - asymmetric

		CLD			LUMEN OUTPUT (tq= 25 °C)
LED	colour	weight	code	W tot	K - ølm - CRI
LED	RAL 7021	5.50	422316-00	25	2700K - **3400lm** - CRI>80
					3000K - **3545lm** - CRI>80
					4000K - **3695lm** - CRI>80
				45	2700K - **6110lm** - CRI>80
					3000K - **6405lm** - CRI>80
					4000K - **6650lm** - CRI>80
				60	2700K - **8080lm** - CRI>80
					3000K - **8375lm** - CRI>80
					4000K - **8865lm** - CRI>80



GENERAL CHARACTERISTICS

Housing: pressed in die-cast aluminium.

Pole connection: pressed in die-cast aluminium. Suited for poles with a diameter 60 mm.

Diffuser: polycarbonate 2,5 mm thick, thermal shock and impact resistant (UNI-EN 12150-1: 2001).

Coating: the fully automated powder-coating cycle involves a polyester-based, salt-spray corrosion-resistant and UV-stabilised paint.

Upon request: protective coating recommended for marine environments within 5 km of the sea.

Standard supply: automatic temperature control inside the device with automatic resetting; dedicated electronic device to protect the LED module; Complete with waterproof connector for quick installation and anti-condensation valve for air recirculation.

SURGE Electronic safety device to protect the LED module and the related ballast compliant with EN 61547.

OTHER CHARACTERISTICS

LOW FLICKER Product with a very low flicker; uniform light for greater eye protection.

Registered Design DM/100271 The International Bureau of the World Intellectual Property Organization (WIPO) hereby certifies that the particulars given below correspond to the recording made in the International Register of Industrial Designs.

The ENEC Plus mark certifies that the LED luminaires are compliant and reliable in terms of safety and declared performance.

SPECIAL VERSION

Upon request (subcode -0026): version with diffuser with opal finish for greater lighting control; ideal for installation in residential areas, including condominium gardens and private parks and streets.



THE RANGE OF ISCHIA STREET LAMPS IS AVAILABLE IN THE FOLLOWING COLOUR TEMPERATURES:

2200K **2200K (subcode -73):** lamps with warm amber light at a colour temperature of 2200K reduces the risks of an excessive exposure to harmful blue LED light and allows a "softer" impact on inhabited zones, especially in historic centres.

3000K 4000K **3000K - 4000K as standard:** lamps with 3000K-4000K white light, instead, is the best choice for lighting up urban areas, streets, residential centres and generally all areas where this type of light guarantees greater safety and visual comfort.

Upon request LED 4000K - CRI 80 versions with **sub-code -60.**

PRODUCT CODE STRUCTURE

The product code of the Ischia range consists of alphanumeric characters that indicate the product's technical features and is structured as follows:

standard code	equipment	current (I out)	optics type
424660	00	0280	RW

The type of optics is identified as follows:

RW: rotosymmetric wide beam optic
RM: rotosymmetric medium beam optic
SW: square wide beam optic
CA: cycle-pedestrian asymmetric optic
CS: cycle-pedestrian symmetric optic
AM: asymmetric medium beam optic
AW: asymmetric wide beam optic

CLD PROG

PROG (CLD PROG) AVAILABLE FUNCTIONS

Luminous flux setup	This can be done by programming the drive current values requested when ordering/purchasing the fixture
CLO (Constant Light Output)	The lighting fixture maintains a constant light output throughout its entire service life

LIGHTING POINT MANAGEMENT OPTIONS ON REQUEST

possibility to choose different lighting point management systems according to the system's needs:

1-10V dimming ordered with **sub-code -12**	Adjustment range from 10%-100% with 1-10V
Virtual Midnight order with **subcode -30**	Stand-alone system with automatic luminous flux reduction in **4 steps**. To increase energy savings at night when there are fewer people and vehicles around, a lighting fixture can be programmed according to a specific profile (customizable on request). The fixture reduces its luminous flux through a self-learning process which, depending on the previous switching on and off times, will determine a hypothetical "virtual midnight". This is the average value between the time the fixture is switched on (sunset) and switched off (sunrise). The "virtual midnight" is the reference point for dimming lights according to the desired profile. The device is integrated in the LED driver and therefore does not require any modification to the system. *In order for the system to function correctly, the system must be adjusted by a device that turns the system on and off on a regular basis every day.* ***ATTENTION:*** *original settings and time slots for the "virtual midnight" value can be customized in up to 5 steps upon request.*

Factory settings	
Time	**Flux**
on ÷ 22:00	100%
22:00 ÷ 23:30	75%
23:30 ÷ 02:30	50%
02:30 ÷ 04:00	75%
04:00 ÷ off	100%

PLC remote control ordered with **sub-code -0078**	Point-to-point and system management and diagnosis system

For more information see page XX-XXIII

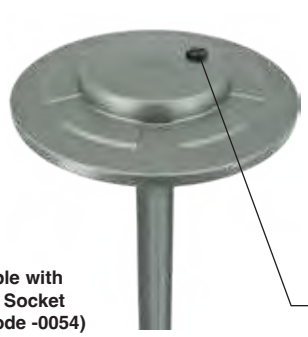

Exemple with Zhaga Socket (subcode -0054)

LUMINAIRE DESIGNED FOR INSTALLATION ON NEMA OR ZHAGA SOCKET: to monitor and manage public lighting centrally, lighting fixtures will always be more equipped with wireless controls that will allow their integration with the IoT. Today the market offers two solutions: **NEMA and ZHAGA**. Both solutions offer an electrical and mechanical connection between the control antenna and the lighting fixture.

Nema Socket order with **subcode -40** (sealing cap to be ordered separately)	Mounted directly on the fixture's body, ideal for remote lighting management applications.
Zhaga Socket order with **subcode -0054** (complete with sealing cap)	

ZDi The Zhaga-D4i mark certifies the fixture's compliance with Zhaga Book 18 version 2 specifications for outdoor luminaires and DiiA's D4i specifications for intra-luminaire DALI interface.



RG0 Ethr

+50 C° -30

U.V.

LOW FLICKER

2200K

3000K

4000K

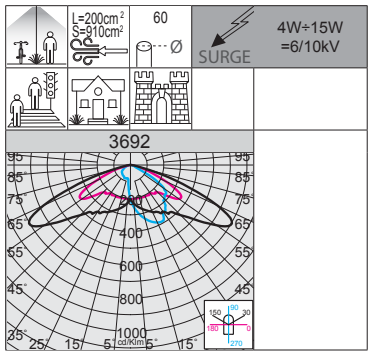

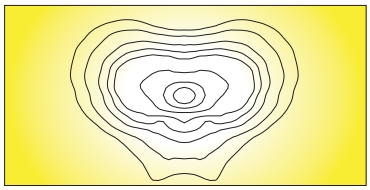

100.000h



IP66 IK10

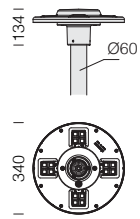

Optics: made of PMMA with high temperature resistance and UV rays.

LED: power factor ≥0.9.
Luminous flux maintenance 90%: 100.000h (L90B10).

Other available versions		
code	W tot	K - ølm - CRI
424781-00-0220-CA	6,5	4000K - 951lm - CRI>80
424781-39-0220-CA		3000K - 885lm - CRI>80
424781-73-0220-CA		2200K - 809lm - **AMBER**
424782-00-0440-CA	11	4000K - 1835m - CRI>80
424782-39-0440-CA		3000K - 1707lm - CRI>80
424782-73-0440-CA		2200K - 1561lm - **AMBER**
424783-00-0280-CA	15	4000K - 2448lm - CRI>80
424783-39-0280-CA		3000K - 2276lm - CRI>80
424783-73-0280-CA		2200K - 2080lm - **AMBER**

Luminous flux setup: this can be done by programming the drive current values requested when ordering/purchasing the fixture

3692 Mini Ischia - cycle-pedestrian CA					
		CLD PROG			**LUMEN OUTPUT (tq= 25 °C)**
LED	colour	weight	code	W tot	K - ølm - CRI
LED	graphite	2.60	424780-00-0110-CA	4	4000K - 562lm - CRI>80
			424780-39-0110-CA		3000K - 522lm - CRI>80
			424780-73-0110-CA		2200K - 477lm - **AMBER**

		CLD ZHAGA			**LUMEN OUTPUT (tq= 25 °C)**
LED	colour	weight	code	W tot	K - ølm - CRI
LED	graphite	2.60	424780-0054-0110-CA	4	4000K - 562lm - CRI>80
			424780-3954-0110-CA		3000K - 522lm - CRI>80
			424780-7354-0110-CA		2200K - 477lm - **AMBER**

Note: when ordering, make sure you select the **AMBER LED** type best suited for your lighting design and installation needs.

IP66 IK10

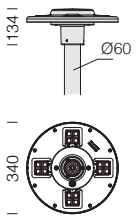

Optics: made of PMMA with high temperature resistance and UV rays.

LED: power factor ≥0.9.
Luminous flux maintenance 90%: 100.000h (L90B10).

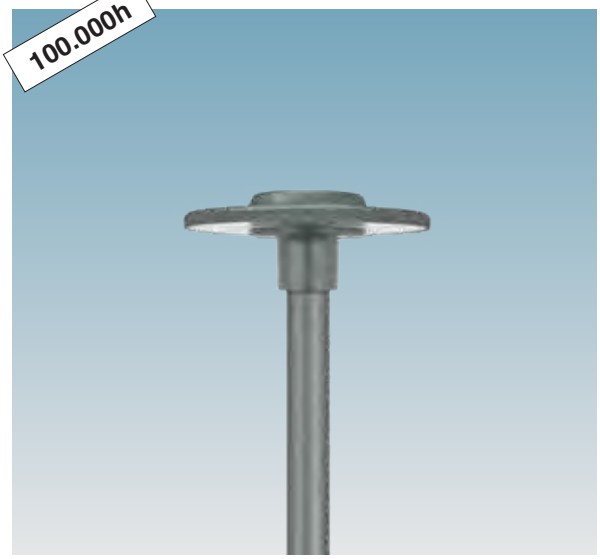

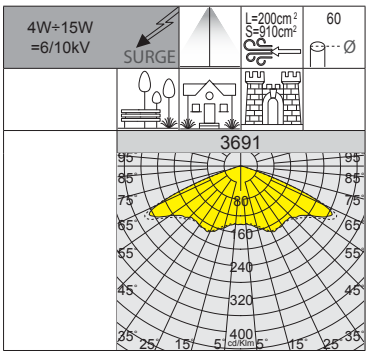

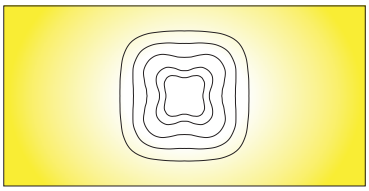

RG0 Ethr
+50 C° -30
U.V.
LOW FLICKER
2200K
3000K
4000K

3691 Mini Ischia - rotosymmetric medium beam RM

		CLD PROG			LUMEN OUTPUT (tq= 25 °C)
LED	colour	weight	code	W tot	K - ølm - CRI
LED	graphite	2.60	424770-00-0110-RM	**4**	4000K - 582lm - CRI>80
			424770-39-0110-RM		3000K - 541lm - CRI>80
			424770-73-0110-RM		2200K - 495lm - **AMBER**

		CLD ZHAGA			LUMEN OUTPUT (tq= 25 °C)
LED	colour	weight	code	W tot	K - ølm - CRI
LED	graphite	2.60	424770-0054-0110-RM	**4**	4000K - 582lm - CRI>80
			424770-3954-0110-RM		3000K - 541lm - CRI>80
			424770-7354-0110-RM		2200K - 495lm - **AMBER**

Note: when ordering, make sure you select the **AMBER LED** type best suited for your lighting design and installation needs.

Other available versions

code	W tot	K - ølm - CRI
424771-00-0220-RM	**6,5**	4000K - 986lm - CRI>80
424771-39-0220-RM		3000K - 918lm - CRI>80
424771-73-0220-RM		2200K - 838lm - **AMBER**
424772-00-0440-RM	**11**	4000K - 1809lm - CRI>80
424772-39-0440-RM		3000K - 1683lm - CRI>80
424772-73-0440-RM		2200K - 1538lm - **AMBER**
424773-00-0280-RM	**15**	4000K - 2413lm - CRI>80
424773-39-0280-RM		3000K - 2244lm - CRI>80
424773-73-0280-RM		2200K - 2051lm - **AMBER**

Luminous flux setup: this can be done by programming the drive current values requested when ordering/purchasing the fixture

IP66 IK10

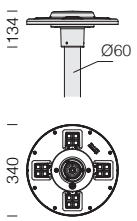

Optics: made of PMMA with high temperature resistance and UV rays.

LED: power factor ≥0.9.
Luminous flux maintenance 90%: 100.000h (L90B10).

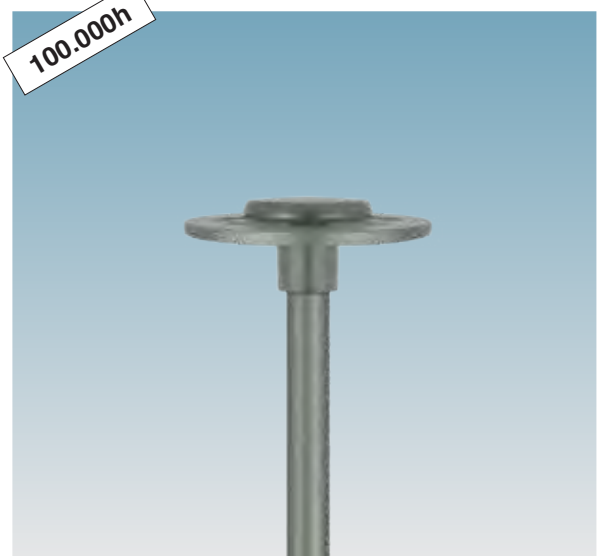

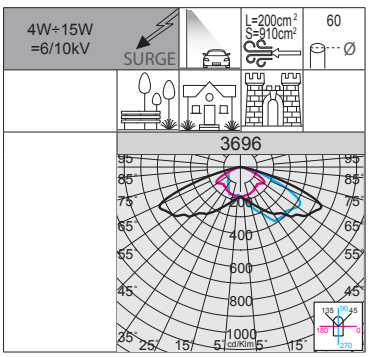

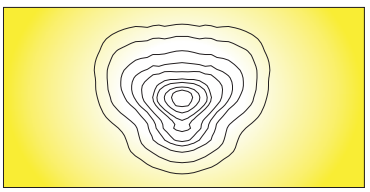

RG0 Ethr
+50 C° -30
U.V.
LOW FLICKER
2200K
3000K
4000K

3696 Mini Ischia - asymmetric wide beam AW

		CLD PROG			LUMEN OUTPUT (tq= 25 °C)
LED	colour	weight	code	W tot	K - ølm - CRI
LED	graphite	2.60	424750-00-0110-AW	**4**	4000K - 583lm - CRI>80
			424750-39-0110-AW		3000K - 542lm - CRI>80
			424750-73-0110-AW		2200K - 495lm - **AMBER**

		CLD ZHAGA			LUMEN OUTPUT (tq= 25 °C)
LED	colour	weight	code	W tot	K - ølm - CRI
LED	graphite	2.60	424750-0054-0110-AW	**4**	4000K - 583lm - CRI>80
			424750-3954-0110-AW		3000K - 542lm - CRI>80
			424750-7354-0110-AW		2200K - 495lm - **AMBER**

Note: when ordering, make sure you select the **AMBER LED** type best suited for your lighting design and installation needs.

Other available versions

code	W tot	K - ølm - CRI
424751-00-0220-AW	**6,5**	4000K - 988lm - CRI>80
424751-39-0220-AW		3000K - 919lm - CRI>80
424751-73-0220-AW		2200K - 840lm - **AMBER**
424752-00-0440-AW	**11**	4000K - 1772lm - CRI>80
424752-39-0440-AW		3000K - 1649lm - CRI>80
424752-73-0440-AW		2200K - 1506lm - **AMBER**
424753-00-0280-AW	**15**	4000K - 2363lm - CRI>80
424753-39-0280-AW		3000K - 2198lm - CRI>80
424753-73-0280-AW		2200K - 2008lm - **AMBER**

Luminous flux setup: this can be done by programming the drive current values requested when ordering/purchasing the fixture





Upon request (subcode -0026): version with diffuser with opal finish for greater lighting control; ideal for installation in residential areas, including condominium gardens and private parks and streets.

RG0
Ethr
+50 C° -30
U.V.
LOW FLICKER
3000K
4000K

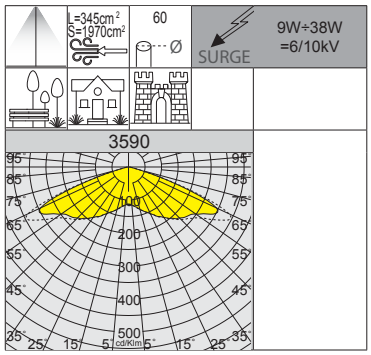

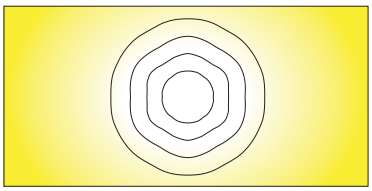



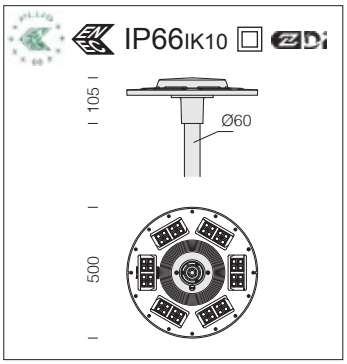

Optics: made of PMMA with high temperature resistance and UV rays.

LED: power factor ≥0.9.
Luminous flux maintenance 90%: 100.000h (L90B10).

Other available versions		
code	W tot	K - ølm - CRI
424660-00-0420-RW	9	4000K - 1520lm - CRI 70
424660-39-0420-RW		3000K - 1430lm - CRI 70
424660-00-0660-RW	15	4000K - 2390lm - CRI 70
424660-39-0660-RW		3000K - 2260lm - CRI 70
424660-00-0510-RW	23	4000K - 3690lm - CRI 70
424660-39-0510-RW		3000K - 3480lm - CRI 70

Luminous flux setup: this can be done by programming the drive current values requested when ordering/purchasing the fixture

3590 Ischia - rotosymmetric wide beam RW					
		CLD PROG			LUMEN OUTPUT (tq= 25 °C)
LED	colour	weight	code	W tot	K - ølm - CRI
LED	graphite	4.90	424660-00	30	4000K - 4770lm - CRI 70
			424660-39		3000K - 4510lm - CRI 70
LED	graphite	4.90	424661-00	38	4000K - 6030lm - CRI 70
			424661-39		3000K - 5710lm - CRI 70

		CLD ZHAGA			LUMEN OUTPUT (tq= 25 °C)
LED	colour	weight	code	W tot	K - ølm - CRI
LED	graphite	4.90	424660-0054	30	4000K - 4770lm - CRI 70
			424660-3954		3000K - 4510lm - CRI 70
LED	graphite	4.90	424661-0054	38	4000K - 6030lm - CRI 70
			424661-3954		3000K - 5710lm - CRI 70

Upon request (sub-code -60)	
LED	4000K - CRI 80

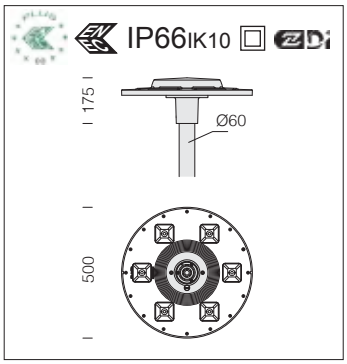

LED: power factor ≥0,92. Luminous flux maintenance:	
80%	90.000h (L80B10)
70%	100.000h (L70B50)

Reflector: in pre-anodised 99.85 aluminium.

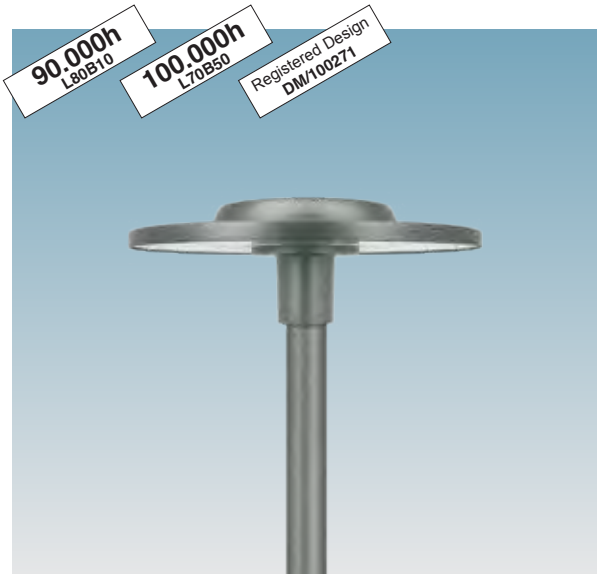

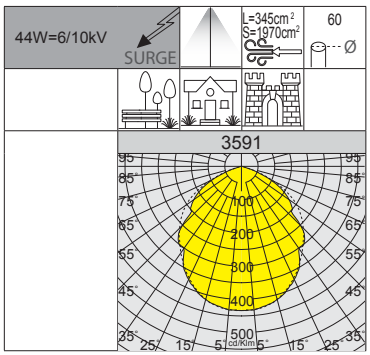

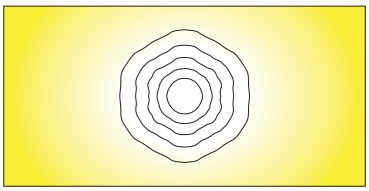

RG0 Ethr · +50 C° -30 · U.V. · LOW FLICKER · 2200K · 3000K · 4000K

3591 Ischia - COB rotosymmetric medium beam RM

		CLD PROG			LUMEN OUTPUT (tq= 25 °C)
LED	colour	weight	code	W tot	K - ølm - CRI
COB	graphite	4.90	424670-00	44	4000K - 5877lm - CRI 80
			424671-00		3000K - 5469lm - CRI 80
COB AMBER			424670-73		2200K - 5172lm - **AMBER**

		CLD ZHAGA			LUMEN OUTPUT (tq= 25 °C)
LED	colour	weight	code	W tot	K - ølm - CRI
COB	graphite	4.90	424670-0054	44	4000K - 5877lm - CRI 80
			424671-0054		3000K - 5469lm - CRI 80
COB AMBER			424670-7354		2200K - 5172lm - **AMBER**

Note: when ordering, make sure you select the **AMBER LED** type best suited for your lighting design and installation needs.

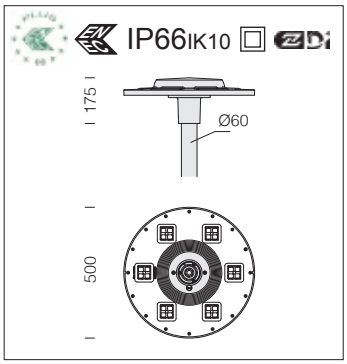

Optics: made of PMMA with high temperature resistance and UV rays.

LED: power factor ≥0.9.
Luminous flux maintenance 90%: 100.000h (L90B10).



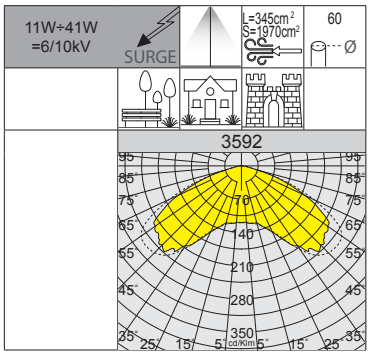

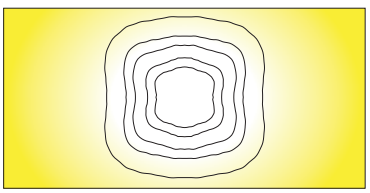

RG0 Ethr · +50 C° -30 · U.V. · LOW FLICKER · 3000K · 4000K

3592 Ischia - square wide beam SW

		CLD PROG			LUMEN OUTPUT (tq= 25 °C)
LED	colour	weight	code	W tot	K - ølm - CRI
LED	graphite	4.90	424680-00	31	4000K - 4835lm - CRI 70
			424680-39		3000K - 4593lm - CRI 70
LED	graphite	4.90	424681-00	41	4000K - 6244lm - CRI 70
			424681-39		3000K - 5931lm - CRI 70

		CLD ZHAGA			LUMEN OUTPUT (tq= 25 °C)
LED	colour	weight	code	W tot	K - ølm - CRI
LED	graphite	4.90	424680-0054	31	4000K - 4835lm - CRI 70
			424680-3954		3000K - 4593lm - CRI 70
LED	graphite	4.90	424681-0054	41	4000K - 6244lm - CRI 70
			424681-3954		3000K - 5931lm - CRI 70

Upon request (sub-code -60)	
LED	4000K - CRI 80

Other available versions		
code	W tot	K - ølm - CRI
424680-00-0280-SW	11	4000K - 1650lm - CRI 70
424680-39-0280-SW		3000K - 1568lm - CRI 70
424680-00-0440-SW	16	4000K - 2440lm - CRI 70
424680-39-0440-SW		3000K - 2318lm - CRI 70
424680-00-0320-SW	24	4000K - 3791lm - CRI 70
424680-39-0320-SW		3000K - 3601lm - CRI 70

Luminous flux setup: this can be done by programming the drive current values requested when ordering/purchasing the fixture

RG0 Ethr | +50 C° -30 | U.V. | LOW FLICKER | 3000K | 4000K

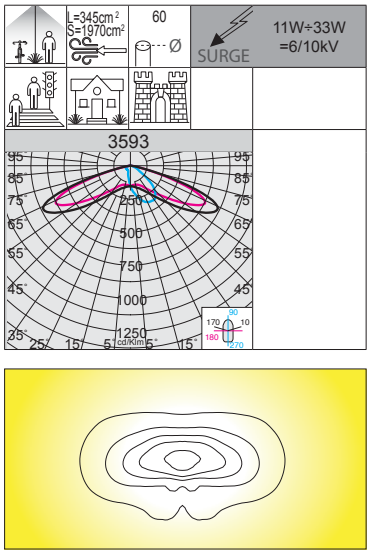

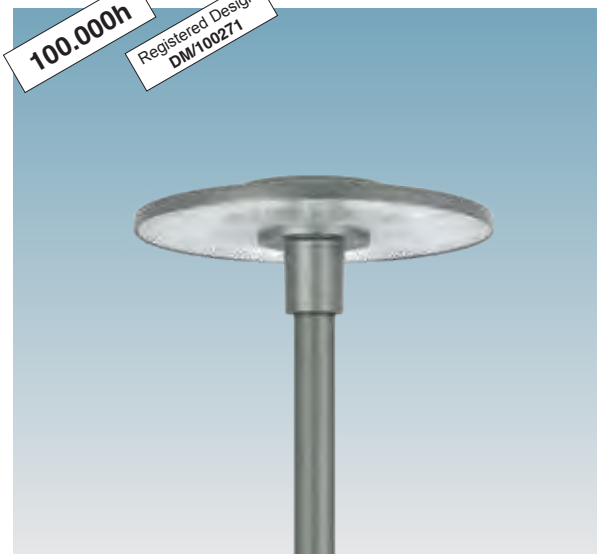

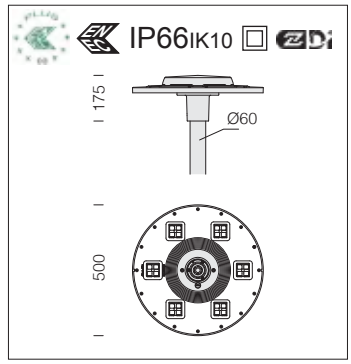

Optics: made of PMMA with high temperature resistance and UV rays.

LED: power factor ≥0.9.
Luminous flux maintenance 90%: 100.000h (L90B10).

Other available versions		
code	W tot	K - ølm - CRI
424690-00-0480-CA	17	4000K - 2822lm - CRI 70
424690-39-0480-CA		3000K - 2681lm - CRI 70
424690-00-0340-CA	25	4000K - 3997lm - CRI 70
424690-39-0340-CA		3000K - 3797lm - CRI 70
424690-00-0450-CA	33	4000K - 5126lm - CRI 70
424690-39-0450-CA		3000K - 4870lm - CRI 70

Luminous flux setup: this can be done by programming the drive current values requested when ordering/ purchasing the fixture

3593 Ischia - cycle-pedestrian asymmetric CA

		CLD PROG			LUMEN OUTPUT (tq= 25 °C)
LED	colour	weight	code	W tot	K - ølm - CRI
LED	graphite	4.90	424690-00-0280-CA	11	4000K - 1658lm - CRI 70
			424690-39-0280-CA		3000K - 1575lm - CRI 70

		CLD ZHAGA			LUMEN OUTPUT (tq= 25 °C)
LED	colour	weight	code	W tot	K - ølm - CRI
LED	graphite	4.90	424690-0054-0280-CA	11	4000K - 1658lm - CRI 70
			424690-354-0280-CA		3000K - 1575lm - CRI 70

Upon request (sub-code -60)	
LED	4000K - CRI 80

RG0 Ethr | +50 C° -30 | U.V. | LOW FLICKER | 3000K | 4000K

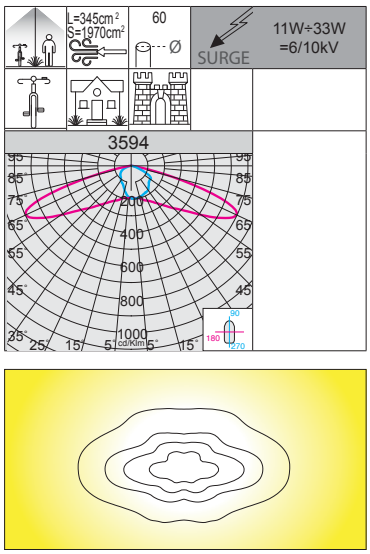

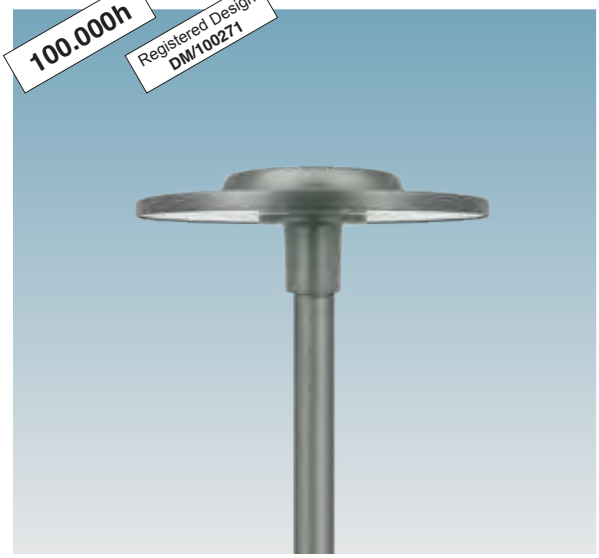

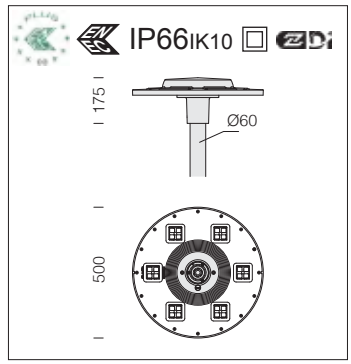

Optics: made of PMMA with high temperature resistance and UV rays.

LED: power factor ≥0.9.
Luminous flux maintenance 90%: 100.000h (L90B10).

Other available versions		
code	W tot	K - ølm - CRI
424700-00-0480-CS	17	4000K - 2815lm - CRI 70
424700-39-0480-CS		3000K - 2674lm - CRI 70
424700-00-0340-CS	25	4000K - 3988lm - CRI 70
424700-39-0340-CS		3000K - 3788lm - CRI 70
424700-00-0450-CS	33	4000K - 5114lm - CRI 70
424700-39-0450-CS		3000K - 4859lm - CRI 70

Luminous flux setup: this can be done by programming the drive current values requested when ordering/ purchasing the fixture

3594 Ischia - cycle-pedestrian symmetric CS

		CLD PROG			LUMEN OUTPUT (tq= 25 °C)
LED	colour	weight	code	W tot	K - ølm - CRI
LED	graphite	4.90	424700-00-0280-CS	11	4000K - 1653lm - CRI 70
			424700-39-0280-CS		3000K - 1571lm - CRI 70

		CLD PROG			LUMEN OUTPUT (tq= 25 °C)
LED	colour	weight	code	W tot	K - ølm - CRI
LED	graphite	4.90	424700-0054-0280-CS	11	4000K - 1653lm - CRI 70
			424700-3954-0280-CS		3000K - 1571lm - CRI 70

Upon request (sub-code -60)	
LED	4000K - CRI 80

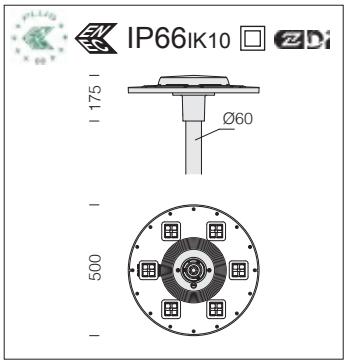

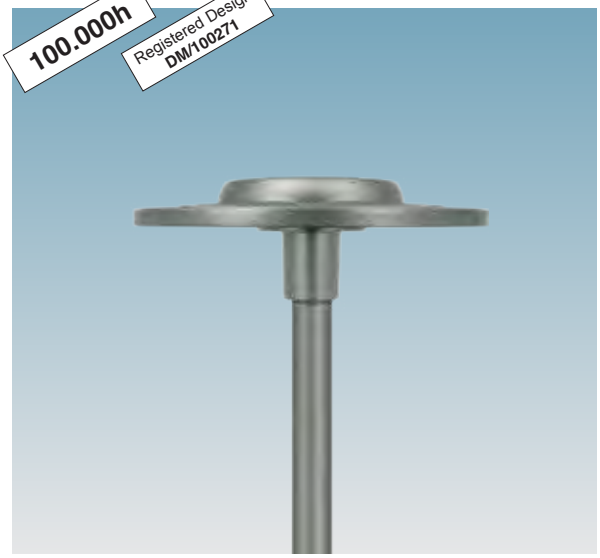

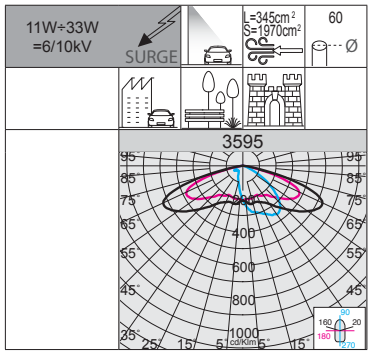

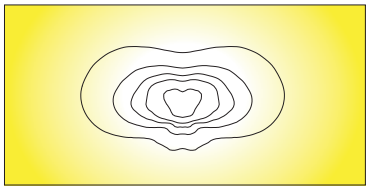

RG0 Ethr

+50 C° -30

U.V.

LOW FLICKER

3000K

4000K

Optics: made of PMMA with high temperature resistance and UV rays.

LED: power factor ≥0.9.
Luminous flux maintenance 90%: 100.000h (L90B10).

3595 Ischia - asymmetric medium beam AM					
		CLD PROG			LUMEN OUTPUT (tq= 25 °C)
LED	colour	weight	code	W tot	K - ølm - CRI
LED	graphite	4.90	424710-00-0280-AM	11	4000K - 1665lm - CRI 70
			424710-39-0280-AM		3000K - 1582lm - CRI 70

		CLD PROG			LUMEN OUTPUT (tq= 25 °C)
LED	colour	weight	code	W tot	K - ølm - CRI
LED	graphite	4.90	424710-0054-0280-AM	11	4000K - 1665lm - CRI 70
			424710-3954-0280-AM		3000K - 1582lm - CRI 70

Upon request (sub-code -60)	
LED	4000K - CRI 80

Other available versions		
code	W tot	K - ølm - CRI
424710-00-0480-AM	17	4000K - 2835lm - CRI 70
424710-39-0480-AM		3000K - 2693lm - CRI 70
424710-00-0340-AM	25	4000K - 4016lm - CRI 70
424710-39-0340-AM		3000K - 3813lm - CRI 70
424710-00-0450-AM	33	4000K - 5150lm - CRI 70
424710-39-0450-AM		3000K - 4893lm - CRI 70

Luminous flux setup: this can be done by programming the drive current values requested when ordering/ purchasing the fixture

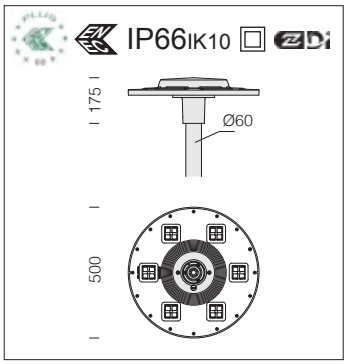

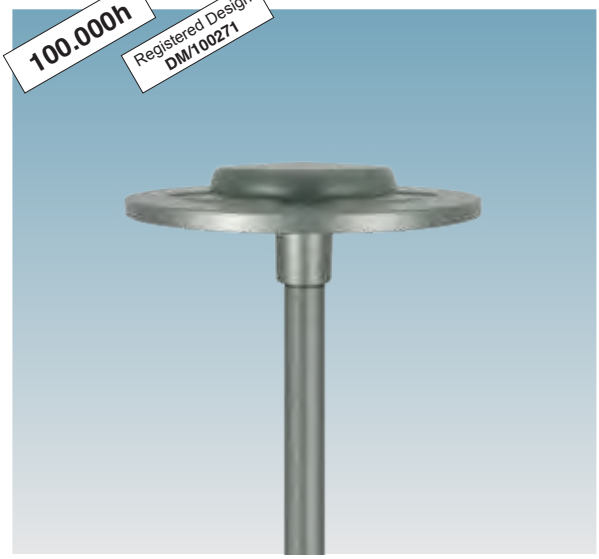

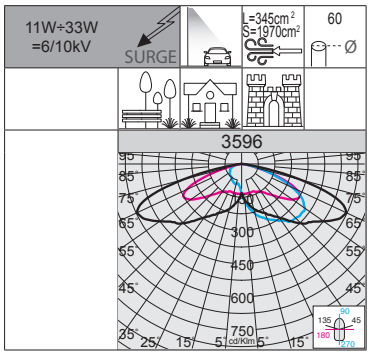

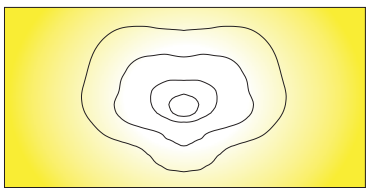

RG0 Ethr

+50 C° -30

U.V.

LOW FLICKER

3000K

4000K

Optics: made of PMMA with high temperature resistance and UV rays.

LED: power factor ≥0.9.
Luminous flux maintenance 90%: 100.000h (L90B10).

3596 Ischia - asymmetric wide beam AW					
		CLD PROG			LUMEN OUTPUT (tq= 25 °C)
LED	colour	weight	code	W tot	K - ølm - CRI
LED	graphite	4.90	424720-00-0450-AW	33	4000K - 4932lm - CRI 70
			424720-39-0450-AW		3000K - 4686lm - CRI 70

		CLD ZHAGA			LUMEN OUTPUT (tq= 25 °C)
LED	colour	weight	code	W tot	K - ølm - CRI
LED	graphite	4.90	424720-0054-0450-AW	33	4000K - 4932lm - CRI 70
			424720-3954-0450-AW		3000K - 4686lm - CRI 70

Upon request (sub-code -60)	
LED	4000K - CRI 80

Other available versions		
code	W tot	K - ølm - CRI
424720-00-0280-AW	11	4000K - 1595lm - CRI 70
424720-39-0280-AW		3000K - 1515lm - CRI 70
424720-00-0480-AW	17	4000K - 2715lm - CRI 70
424720-39-0480-AW		3000K - 2580lm - CRI 70
424720-00-0340-AW	25	4000K - 3846lm - CRI 70
424720-39-0340-AW		3000K - 3653lm - CRI 70

Luminous flux setup: this can be done by programming the drive current values requested when ordering/ purchasing the fixture

VIRTUAL MIDNIGHT: to increase energy savings at night when there are fewer people and vehicles around, a lighting fixture can be programmed according to a specific profile (customizable on request). The fixture reduces its luminous flux through a self-learning process which, depending on the previous switching on and off times, will determine a hypothetical "virtual midnight". This is the average value between the time the fixture is switched on (sunset) and switched off (sunrise). The "virtual midnight" is the reference point for dimming lights according to the desired profile. The device is integrated in the LED driver and therefore does not require any modification to the system. *In order for the system to function correctly, the system must be adjusted by a device that turns the system on and off on a regular basis every day.*



Virtual Midnight subcode -30: fixtures are equipped with a device to reduce flux in **4 steps** based on the calculation of the virtual midnight.

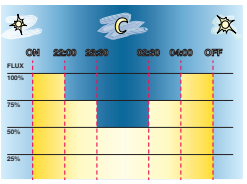

Factory settings	
Time	**Flux**
on ÷ 22:00	100%
22:00 ÷ 23:30	75%
23:30 ÷ 02:30	50%
02:30 ÷ 04:00	75%
04:00 ÷ off	100%

ATTENTION: *original settings and time slots for the "virtual midnight" value can be customized in up to 5 steps upon request.*

Virtual midnight in 2 steps subcode -35

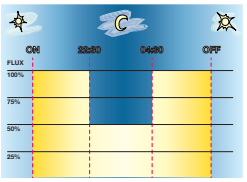

Settings upon request	
Time	**Flux**
on ÷ 22:30	100%
22:30 ÷ 04:30	50%
04:30 ÷ off	100%

Virtual midnight in 5 steps subcode -32

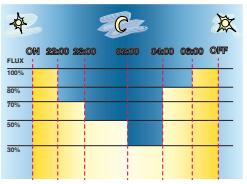

Settings upon request	
Time	**Flux**
on ÷ 22:00	100%
22:00 ÷ 23:00	70%
23:00 ÷ 02:00	50%
02:00 ÷ 04:00	30%
04:00 ÷ 06:00	80%
06:00 ÷ off	100%

RG0 Ethr

+50 C° -30

U.V.

LOW FLICKER

3000K

4000K

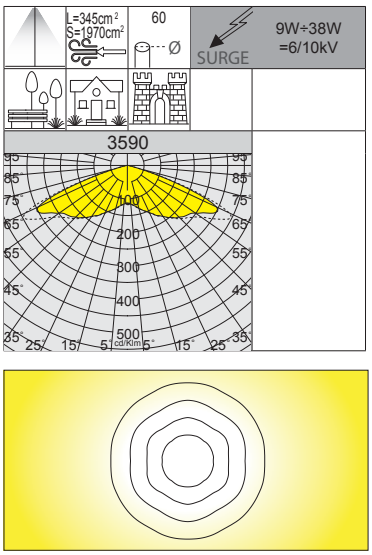



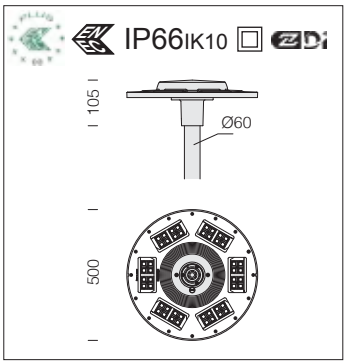

Optics: made of PMMA with high temperature resistance and UV rays.

LED: power factor ≥0.9.
Luminous flux maintenance 90%: 100.000h (L90B10).

Other available versions		
code	**W tot**	K - ølm - CRI
424660-30-0420-RW	**9**	4000K - 1520lm - CRI 70
424660-3028-0420-RW		3000K - 1430lm - CRI 70
424660-30-0660-RW	**15**	4000K - 2390lm - CRI 70
424660-3028-0660-RW		3000K - 2260lm - CRI 70
424660-30-0510-RW	**23**	4000K - 3690lm - CRI 70
424660-3028-0510-RW		3000K - 3480lm - CRI 70

Luminous flux setup: this can be done by programming the drive current values requested when ordering/ purchasing the fixture

3590 Ischia MIDNIGHT - rotosymmetric wide beam RW					
		CLD MIDNIGHT			**LUMEN OUTPUT (tq= 25 °C)**
LED	colour	weight	code	**W tot**	K - ølm - CRI
LED	graphite	4.90	424660-30	**30**	4000K - 4770lm - CRI 70
			424660-3028		3000K - 4510lm - CRI 70
LED	graphite	4.90	424661-30	**38**	4000K - 6030lm - CRI 70
			424661-3028		3000K - 5710lm - CRI 70

Upon request (sub-code -60)	
LED	4000K - CRI 80

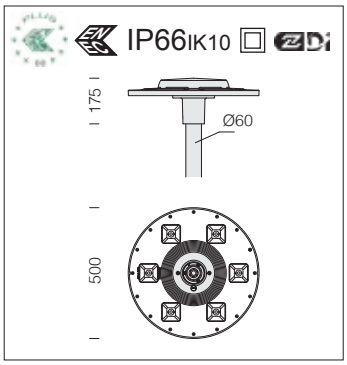

LED: power factor ≥0,92. Luminous flux maintenance:	
80%	90.000h (L80B10)
70%	100.000h (L70B50)

Reflector: in pre-anodised 99.85 aluminium.

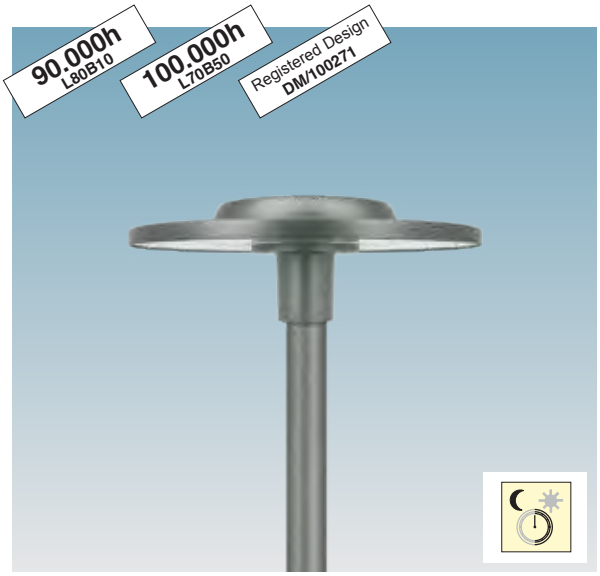

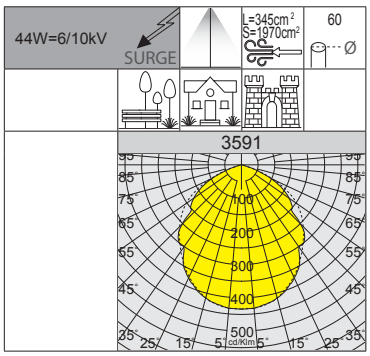

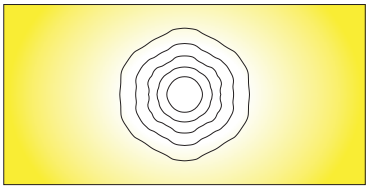

RG0 Ethr | +50 C° -30 | U.V. | LOW FLICKER | 2200K | 3000K | 4000K

3591 Ischia MIDNIGHT - COB rotosymmetric medium beam RM

		CLD MIDNIGHT			LUMEN OUTPUT (tq= 25 °C)
LED	colour	weight	code	W tot	K - ølm - CRI
COB	graphite	4.90	424670-30	**44**	4000K - 5877lm - CRI 80
			424671-30		3000K - 5469lm - CRI 80
COB AMBER			424670-7330		2200K - 5172lm - **AMBER**

Note: when ordering, make sure you select the **AMBER LED** type best suited for your lighting design and installation needs.

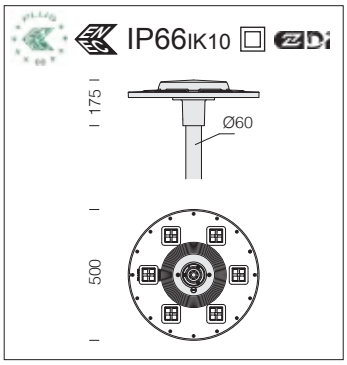

Optics: made of PMMA with high temperature resistance and UV rays.

LED: power factor ≥0.9.
Luminous flux maintenance 90%: 100.000h (L90B10).

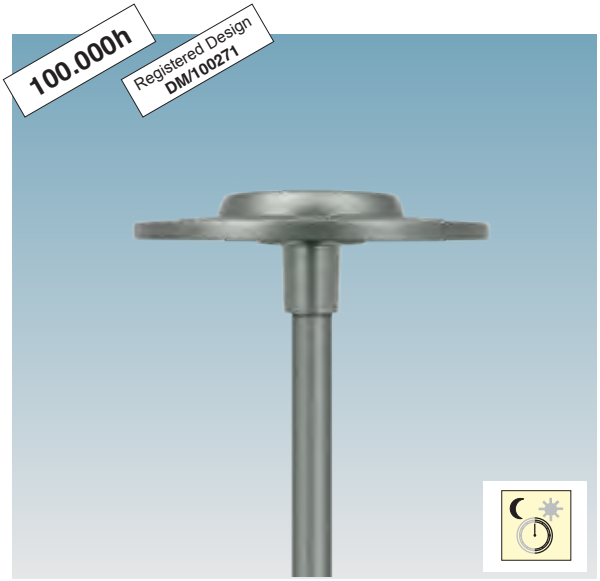

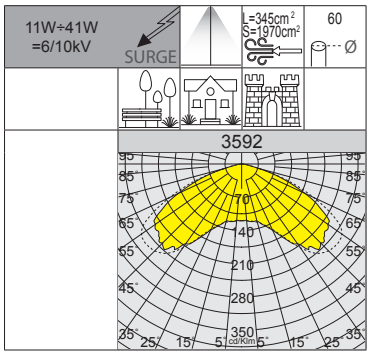

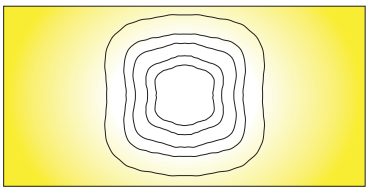

RG0 Ethr | +50 C° -30 | U.V. | LOW FLICKER | 3000K | 4000K

3592 Ischia MIDNIGHT - square wide beam SW

		CLD MIDNIGHT			LUMEN OUTPUT (tq= 25 °C)
LED	colour	weight	code	W tot	K - ølm - CRI
LED	graphite	4.90	424680-30	**31**	4000K - 4835lm - CRI 70
			424680-3028		3000K - 4593lm - CRI 70
LED	graphite	4.90	424681-30	**41**	4000K - 6244lm - CRI 70
			424681-3028		3000K - 5931lm - CRI 70

Upon request (sub-code -60)	
LED	4000K - CRI 80

Other available versions		
code	W tot	K - ølm - CRI
424680-30-0280-SW	**11**	4000K - 1650lm - CRI 70
424680-3028-0280-SW		3000K - 1568lm - CRI 70
424680-30-0440-SW	**16**	4000K - 2440lm - CRI 70
424680-3028-0440-SW		3000K - 2318lm - CRI 70
424680-30-0320-SW	**24**	4000K - 3791lm - CRI 70
424680-3028-0320-SW		3000K - 3601lm - CRI 70

Luminous flux setup: this can be done by programming the drive current values requested when ordering/purchasing the fixture

RG0 Ethr | +50 C° -30 | U.V. | LOW FLICKER | 3000K | 4000K

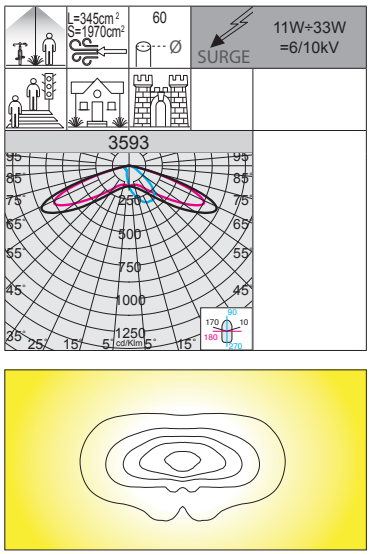

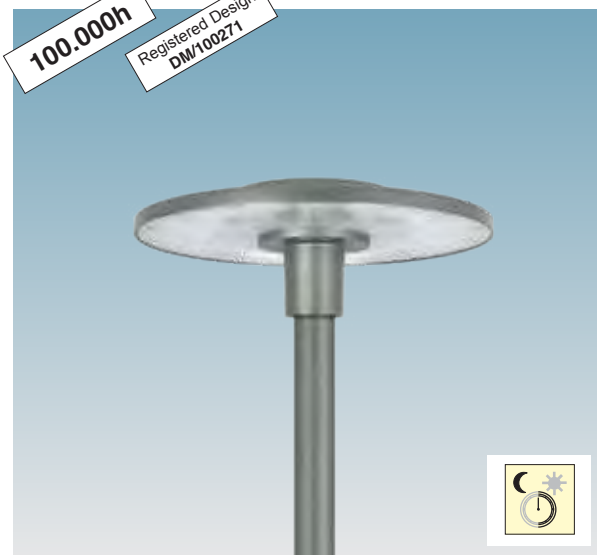

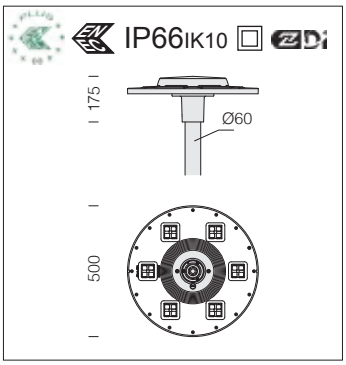

Optics: made of PMMA with high temperature resistance and UV rays.

LED: power factor ≥0.9.
Luminous flux maintenance 90%: 100.000h (L90B10).

Other available versions		
code	W tot	K - ølm - CRI
424690-30-0480-CA	17	4000K - 2822lm - CRI 70
424690-3028-0480-CA		3000K - 2681lm - CRI 70
424690-30-0340-CA	25	4000K - 3997lm - CRI 70
424690-3028-0340-CA		3000K - 3797lm - CRI 70
424690-30-0450-CA	33	4000K - 5126lm - CRI 70
424690-3028-0450-CA		3000K - 4870lm - CRI 70

Luminous flux setup: this can be done by programming the drive current values requested when ordering/purchasing the fixture

3593 Ischia MIDNIGHT - cycle-pedestrian asymmetric CA

		CLD MIDNIGHT			LUMEN OUTPUT (tq= 25 °C)
LED	colour	weight	code	W tot	K - ølm - CRI
LED	graphite	4.90	424690-30-0280-CA	11	4000K - 1658lm - CRI 70
			424690-3028-0280-CA		3000K - 1575lm - CRI 70

Upon request (sub-code -60)	
LED	4000K - CRI 80

RG0 Ethr | +50 C° -30 | U.V. | LOW FLICKER | 3000K | 4000K

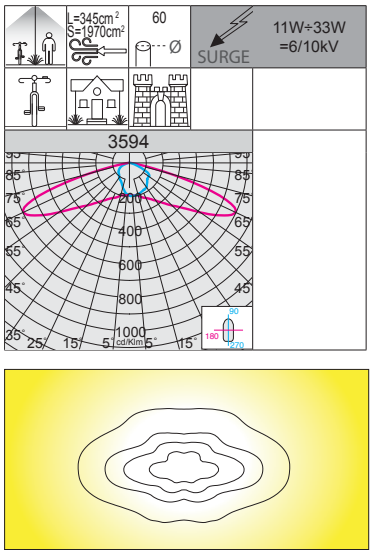

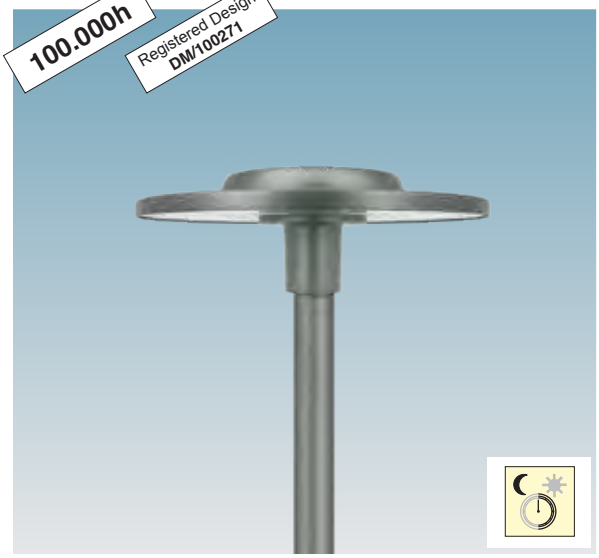

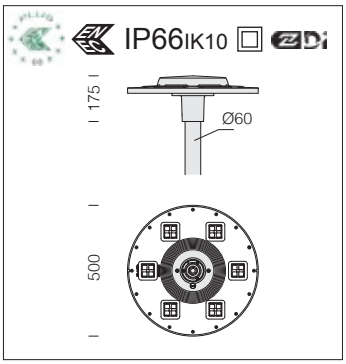

Optics: made of PMMA with high temperature resistance and UV rays.

LED: power factor ≥0.9.
Luminous flux maintenance 90%: 100.000h (L90B10).

Other available versions		
code	W tot	K - ølm - CRI
424700-30-0480-CS	17	4000K - 2815lm - CRI 70
424700-3028-0480-CS		3000K - 2674lm - CRI 70
424700-30-0340-CS	25	4000K - 3988lm - CRI 70
424700-3028-0340-CS		3000K - 3788lm - CRI 70
424700-30-0450-CS	33	4000K - 5114lm - CRI 70
424700-3028-0450-CS		3000K - 4859lm - CRI 70

Luminous flux setup: this can be done by programming the drive current values requested when ordering/purchasing the fixture

3594 Ischia - cycle-pedestrian symmetric CS

		CLD MIDNIGHT			LUMEN OUTPUT (tq= 25 °C)
LED	colour	weight	code	W tot	K - ølm - CRI
LED	graphite	4.90	424700-30-0280-CS	11	4000K - 1653lm - CRI 70
			424700-3028-0280-CS		3000K - 1571lm - CRI 70

Upon request (sub-code -60)	
LED	4000K - CRI 80

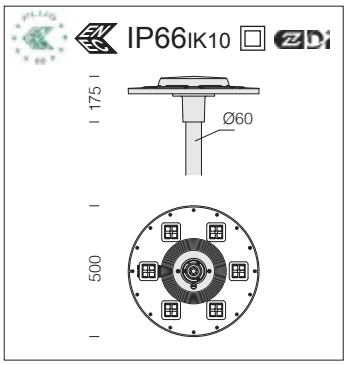



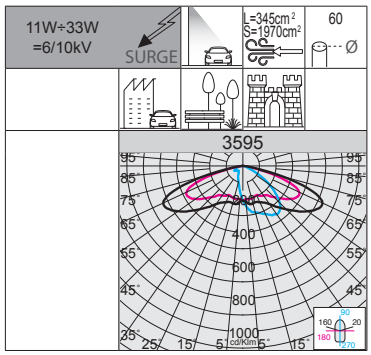

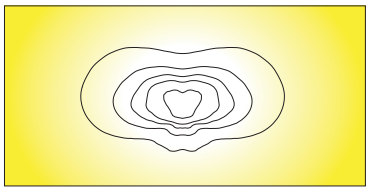

RGO Ethr
+50 C° -30
U.V.
LOW FLICKER
3000K
4000K

Optics: made of PMMA with high temperature resistance and UV rays.

LED: power factor ≥0.9.
Luminous flux maintenance 90%: 100.000h (L90B10).

3595 Ischia MIDNIGHT - asymmetric medium beam AM					
		CLD MIDNIGHT			LUMEN OUTPUT (tq= 25 °C)
LED	colour	weight	code	W tot	K - ølm - CRI
LED	graphite	4.90	424710-30-0280-AM	**11**	4000K - 1665lm - CRI 70
			424710-3028-0280-AM		3000K - 1582lm - CRI 70

Upon request (sub-code -60)	
LED	4000K - CRI 80

Other available versions		
code	W tot	K - ølm - CRI
424710-30-0480-AM	**17**	4000K - 2835lm - CRI 70
424710-3028-0480-AM		3000K - 2693lm - CRI 70
424710-30-0340-AM	**25**	4000K - 4016lm - CRI 70
424710-3028-0340-AM		3000K - 3813lm - CRI 70
424710-30-0450-AM	**33**	4000K - 5150lm - CRI 70
424710-3028-0450-AM		3000K - 4893lm - CRI 70

Luminous flux setup: this can be done by programming the drive current values requested when ordering/ purchasing the fixture

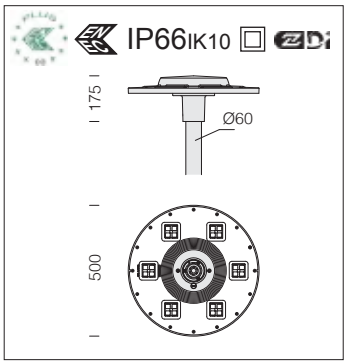

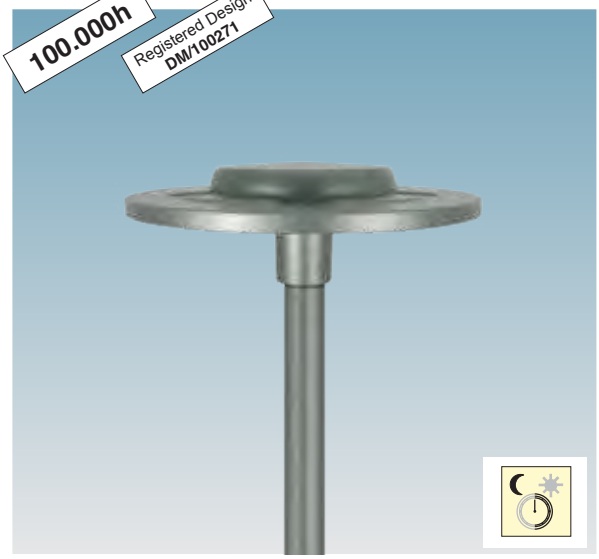

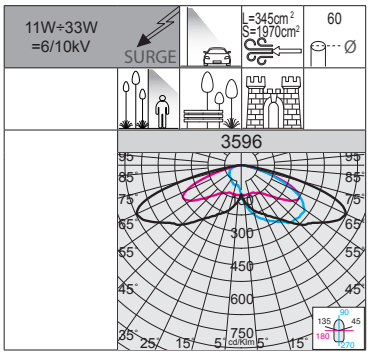

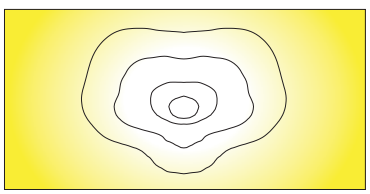

RGO Ethr
+50 C° -30
U.V.
LOW FLICKER
3000K
4000K

Optics: made of PMMA with high temperature resistance and UV rays.

LED: power factor ≥0.9.
Luminous flux maintenance 90%: 100.000h (L90B10).

3596 Ischia MIDNIGHT - asymmetric wide beam AW					
		CLD MIDNIGHT			LUMEN OUTPUT (tq= 25 °C)
LED	colour	weight	code	W tot	K - ølm - CRI
LED	graphite	4.90	424720-30-0450-AW	**33**	4000K - 4932lm - CRI 70
			424720-3028-0450-AW		3000K - 4686lm - CRI 70

Upon request (sub-code -60)	
LED	4000K - CRI 80

Other available versions		
code	W tot	K - ølm - CRI
424720-30-0280-AW	**11**	4000K - 1595lm - CRI 70
424720-3028-0280-AW		3000K - 1515lm - CRI 70
424720-30-0480-AW	**17**	4000K - 2715lm - CRI 70
424720-3028-0480-AW		3000K - 2580lm - CRI 70
424720-30-0340-AW	**25**	4000K - 3846lm - CRI 70
424720-3028-0340-AW		3000K - 3653lm - CRI 70

Luminous flux setup: this can be done by programming the drive current values requested when ordering/ purchasing the fixture

You can make your lighting system **SMART** by integrating sensors into the fixture so that it can detect the movement of people within a given detection area and automatically adjust light intensity according to previously established light levels and delay times. You will also achieve high **energy savings** without affecting the safety and visual comfort of pedestrians.

The lighting fixtures with **sub-code -1219 complete with motion sensors** are a functional lighting solution for public spaces. The ability to control the light flux without people moving in a space will let you **optimize operating costs**, while achieving notable **economic savings**. This lighting solution is best suited for public or private streets, cycle lanes, private roads, parks and, in general, for any installation where smart lighting control is required.

Energy savings

The ability of these fixtures to sense the presence of people transiting in a space through integrated motion sensors will significantly reduce the waste of light, especially at night, and achieve lower energy costs.

Safety

At night-time, the number of people using urban areas, such as parks, is quite low. Therefore, reducing the light flux using fixtures with integrated motion sensors is the ideal solution to always ensure adequate lighting levels.

Green lighting

Installing lighting fixtures with integrated motion sensors that will switch lights on only when people are around is the first step towards becoming a greener city, where spaces are more liveable and safer, without wasting energy and leaving a lesser impact on the environment.



Motion sensor - STAND-ALONE

Ischia with subcode -1219: fixture comes with **stand-alone** presence and light sensor with 0/10V control.

TECHNICAL SPECIFICATIONS	
Frequency	5.8GHz±75MHz
Stand-by power	≤1W
Setting	telecomando
Hold time (adjustable)	5s / 30s / 1min / 3min / 5min / 10min / 20min / 30min
Ambient light (adjustable)	2lux / 10lux /30lux / 50lux / OFF
Stand-by time (adjustable)	0s / 10s / 30s / 1min / 5min / 10min / 30min /+ ∞
Stand-by dimming level (adjustable)	20% / 30% / 50%
Detection area	50% - 75% - 100%
Detection angle	30° - 150°
Technology	Microwave



Remote control cod. **81418618** (to be purchased separately) that **allows changing the parameters even after installation is complete** and without the need to directly access the fixture.

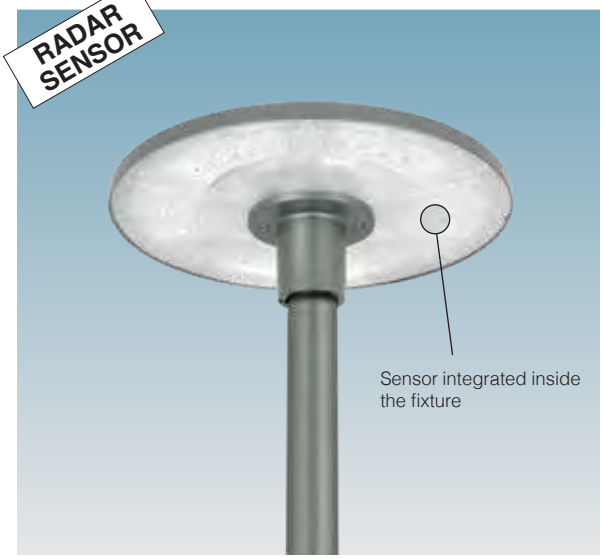

DEFAULT SETTINGS

The fixtures is supplied as standard with the following parameters

Hold time	5s
Ambient light	OFF
Stand-by time	0s
Stand-by dimming level	10%
Detection area	100%

NOTE: when placing your order, it is possible upon request a customized configuration that you need to set.

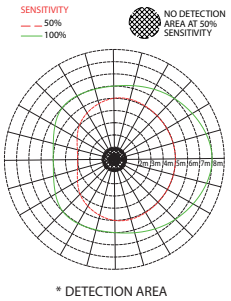

* DETECTION AREA

*** example of detection area** (varies depending on the available versions). For further information, please contact our customer service.

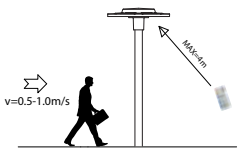

TYPICAL DETECTION AREA AT INSTALLATION HEIGHT 4-6m

A) Detection area: the sensor will turn the lights on when it detects motion in this area; with a 100% detection area the sensitivity level is high.

B) Hold time: the period of time during which lights stay on at full brightness after a person or object has left the detection area.

C) Ambient light: when the level of light inside a room is below a pre-determined threshold, the sensor will trigger the lights on; when set to 'disable', the sensor will operate whenever it detects movement regardless of the amount of light in the room.

D) Stand-by time: refers to the time the sensor keeps the lights at a dim level after the hold time.

E) Stand-by dimming level: is the lights' dimming level during the stand-by time.

EXAMPLE OF OPERATION

The lighting fixtures with **sub-code -1219** complete with motion sensors will adjust the light flux in the presence of moving people by varying the brightness value according to pre-determined levels based on certain times:

1) when there is no motion, the fixtures will keep a certain level of light intensity for a specific period of time

2) when motion is detected in the monitoring area, the luminous flux will dim to 100% of light level

3) if no motion is detected after a certain period of time, the sensor will reset the light level to the pre-set value

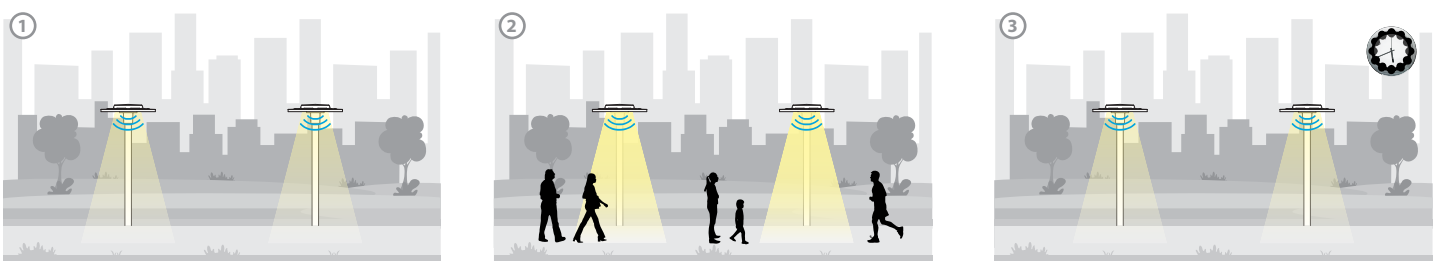

A lighting fixture equipped with a radar-type motion sensor may be affected by wind. Therefore, for particularly windy areas, PIR presence sensors are available upon request and for an additional cost.



GENERAL CHARACTERISTICS

Housing and arms: pressed in die-cast aluminium and designed with a very small surface exposed to wind.

Optics: made of PMMA with high temperature resistance and UV rays.

Pole connection: suited for poles with a diameter 60mm.

Diffuser: extra-clear tempered glass, 4 mm thick, resistant to thermal shocks and impacts (UNI-EN 12150-1: 2001).

Coating: the fully automated powder-coating cycle involves a polyester-based, salt-spray corrosion-resistant and UV-stabilised paint.

Upon request: protective coating recommended for marine environments within 5 km of the sea.

Equipment: nylon wiring plate 30% fibre glass complete with connector waterproof connector for quick installation. Automatic temperature control inside the device with automatic resetting. With dedicated electronic device to protect the LED module. Equipped with an air-circulation valve.

OTHER CHARACTERISTICS

SURGE

Electronic safety device to protect the LED module and the related ballast compliant with EN 61547.
It works in two modes:
- differential mode: surge between power cables and between the phase and neutral.
- common mode: surge between power, L/N and ground cables or between the fixture's body if it is of class II and installed on a metal pole.

LOW FLICKER

Product with a very low flicker; uniform light for greater eye protection.



THE RANGE OF ISEO STREET LAMPS IS AVAILABLE IN THE FOLLOWING COLOUR TEMPERATURES:

3000K 4000K

3000K - 4000K as standard: lamps with 3000K-4000K white light, instead, is the best choice for lighting up urban areas, streets, residential centres and generally all areas where this type of light guarantees greater safety and visual comfort.

Example with Nema Socket (subcode -40)



LUMINAIRE DESIGNED FOR INSTALLATION ON NEMA OR ZHAGA SOCKET: to monitor and manage public lighting centrally, lighting fixtures will always be more equipped with wireless controls that will allow their integration with the IoT. Today the market offers two solutions: **NEMA and ZHAGA**. Both solutions offer an electrical and mechanical connection between the control antenna and the lighting fixture.

Nema Socket order with **subcode -40** (sealing cap to be ordered separately)	**Zhaga Socket** order with **subcode -0054** (complete with sealing cap)
Mounted directly on the fixture's body, ideal for remote lighting management applications.	

ACCESSORIES

acc. 109 anti-glare shield	
RAL 7021	991309-00
To prevent glare effects. To be fitted when Garda is installed near a window.	

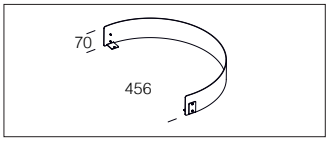

CLD PROG

PROG (CLD PROG) AVAILABLE FUNCTIONS

Luminous flux setup	This can be done by programming the drive current values requested when ordering/purchasing the fixture
CLO (Constant Light Output)	The lighting fixture maintains a constant light output throughout its entire service life

LIGHTING POINT MANAGEMENT OPTIONS ON REQUEST

possibility to choose different lighting point management systems according to the system's needs:

1-10V dimming ordered with **sub-code -12**	Adjustment range from 10%-100% with 1-10V
Virtual Midnight order with **subcode -30**	Stand-alone system with automatic luminous flux reduction in **4 steps**. To increase energy savings at night when there are fewer people and vehicles around, a lighting fixture can be programmed according to a specific profile (customizable on request). The fixture reduces its luminous flux through a self-learning process which, depending on the previous switching on and off times, will determine a hypothetical "virtual midnight". This is the average value between the time the fixture is switched on (sunset) and switched off (sunrise). The "virtual midnight" is the reference point for dimming lights according to the desired profile. The device is integrated in the LED driver and therefore does not require any modification to the system. *In order for the system to function correctly, the system must be adjusted by a device that turns the system on and off on a regular basis every day.* ***ATTENTION:*** *original settings and time slots for the "virtual midnight" value can be customized in up to 5 steps upon request.*
PLC remote control ordered with **sub-code -0078**	Point-to-point and system management and diagnosis system
For more information see page XX-XXIII	

Factory settings	
Time	**Flux**
on ÷ 22:00	100%
22:00 ÷ 23:30	75%
23:30 ÷ 02:30	50%
02:30 ÷ 04:00	75%
04:00 ÷ off	100%

OTHER EXAMPLES OF IRTUAL MIDNIGHT CONFIGURATION

For example, in the central hours of the night, in areas where car and pedestrian traffic decreases significantly, a **reduction in luminous flux keeps the light within safety standards, while avoiding waste**. If we multiply this reduction by tens or hundreds of lamps, we get **significant savings**.

Virtual midnight in 2 steps subcode -35

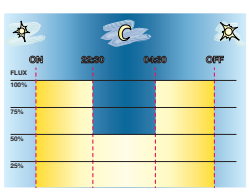

Settings upon request	
Time	**Flux**
on ÷ 22:30	100%
22:30 ÷ 04:30	50%
04:30 ÷ off	100%

Virtual midnight in 5 steps subcode -32

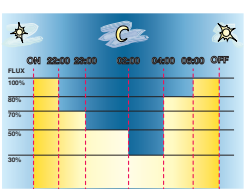

Settings upon request	
Time	**Flux**
on ÷ 22:00	100%
22:00 ÷ 23:00	70%
23:00 ÷ 02:00	50%
02:00 ÷ 04:00	30%
04:00 ÷ 06:00	80%
06:00 ÷ off	100%



IP66 IK08

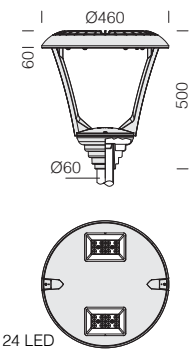

LED: power factor ≥0.92.
Luminous flux maintenance 90%: >100.000h (L90B10).



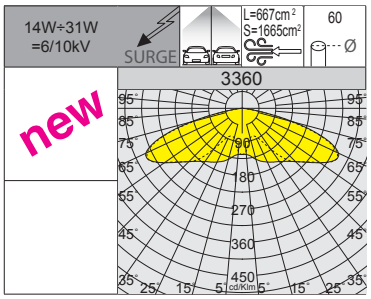

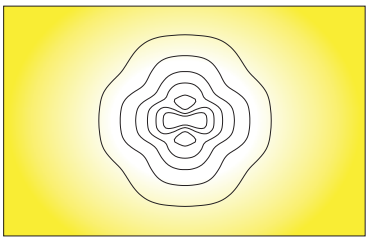

RG0 Ethr | +45 C° -40 | U.V. | LOW FLICKER | 3000K | 4000K

3360 Iseo 1 - bisymmetric

		CLD PROG	CLD MIDNIGHT	CLD ZHAGA		LUMEN OUTPUT (tq= 25 °C)
LED	colour	weight	code	code	code	W tot	K - ølm - CRI
LED	RAL 7021	6.10	330563-00	330563-30	330563-0054	**14**	4000K - **2182lm** - CRI 70
			330563-39	330563-3028	330563-3954		3000K - **2037lm** - CRI 70
LED	RAL 7021	6.10	330564-00	330564-30	330564-0054	**31**	4000K - **4673lm** - CRI 70
			330564-39	330564-3028	330564-3954		3000K - **4445lm** - CRI 70

IP66 IK08

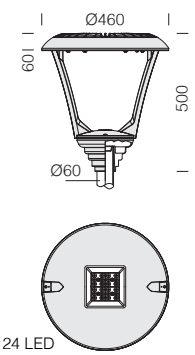

LED: power factor ≥0.92.
Luminous flux maintenance 90%: >100.000h (L90B10).



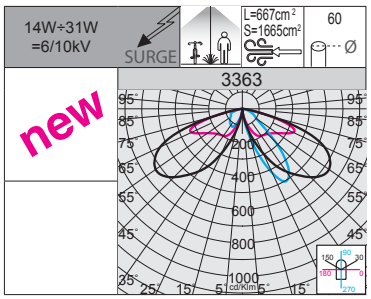

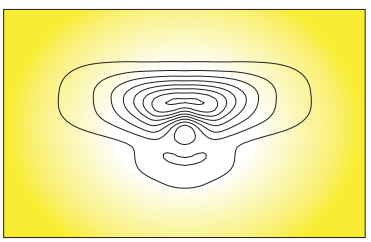

RG0 Ethr | +45 C° -40 | U.V. | LOW FLICKER | 3000K | 4000K

3363 Iseo 4 - cycle-pedestrian

		CLD PROG	CLD MIDNIGHT	CLD ZHAGA		LUMEN OUTPUT (tq= 25 °C)
LED	colour	weight	code	code	code	W tot	K - ølm - CRI
LED	RAL 7021	6.10	330593-00	330593-30	330593-0054	**14**	4000K - **2068lm** - CRI 70
			330593-39	330593-3028	330593-3954		3000K - **1964lm** - CRI 70
LED	RAL 7021	6.10	330594-00	330594-30	330594-0054	**31**	4000K - **4439lm** - CRI 70
			330594-39	330594-3028	330594-3954		3000K - **4217lm** - CRI 70



CCT SWITCH = with this integrated switch you can select the desired light colour, 2700K-3000K-4000K y 1800K-2200K.

POWER SWITCH = with this integrated switch you can select the fixture's total wattage, 25W-45W-60W.



The main feature of this fixture is the new colour-changing technology. With **two built-in switches** positioned on housing of the fixture, you can:

• select 5 different colour temperatures, adjusting to most installations:

1800K **2200K**

EWW = 1800K (extra warm white)

WW = 2200K (extra warm white)

2700K **3000K** **4000K**

WW = 2700K (warm white)

WW = 3000K (warm white)

NW = 4000K (neutral white)

• select the type of luminous flux with 3 output power ranges :

LOW	MEDIUM	HIGH
25W	45W	60W

GENERAL CHARACTERISTICS

Housing and arms: pressed in die-cast aluminium and designed with a very small surface exposed to wind.

Optics: made of PMMA with high temperature resistance and UV rays.

Pole connection: suited for poles with a diameter 60mm.

Diffuser: extra-clear tempered glass, 4 mm thick, resistant to thermal shocks and impacts (UNI-EN 12150-1: 2001).

Coating: the fully automated powder-coating cycle involves a polyester-based, salt-spray corrosion-resistant and UV-stabilised paint.

Upon request: protective coating recommended for marine environments within 5 km of the sea.

Equipment: nylon wiring plate 30% fibre glass complete with connector waterproof connector for quick installation. Automatic temperature control inside the device with automatic resetting. With dedicated electronic device to protect the LED module. Equipped with an air-circulation valve. Supplied standard with double switch to choose the colour temperature between **1800K-2200K** or **2700K-3000K-4000K** and the type of lighting for up to 3 lighting levels**.**

LIGHTING POINT MANAGEMENT OPTIONS ON REQUEST:
Virtual Midnight order with **subcode -30** - Stand-alone system with automatic luminous flux reduction in **4 steps**.
To increase energy savings at night when there are fewer people and vehicles around, a lighting fixture can be programmed according to a specific profile (customizable on request).

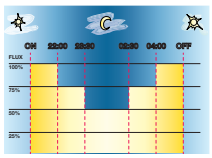

Factory settings	
Time	Flux
on ÷ 22:00	100%
22:00 ÷ 23:30	75%
23:30 ÷ 02:30	50%
02:30 ÷ 04:00	75%
04:00 ÷ off	100%

ATTENTION: *original settings and time slots for the "virtual midnight" value can be customized in up to 5 steps upon request*

Virtual midnight in 2 steps subcode -35

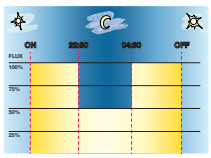

Settings upon request	
Time	Flux
on ÷ 22:30	100%
22:30 ÷ 04:30	50%
04:30 ÷ off	100%

Virtual midnight in 5 steps subcode -32

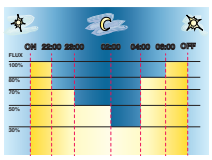

Settings upon request	
Time	Flux
on ÷ 22:00	100%
22:00 ÷ 23:00	70%
23:00 ÷ 02:00	50%
02:00 ÷ 04:00	30%
04:00 ÷ 06:00	80%
06:00 ÷ off	100%

Iseo, is a luminaire with a linear, minimalist design, created to enhance the modern aesthetics of cities and green spaces. Its clean lines bring elegance to the environment, while its uniform, high-efficiency lighting enhances paths, squares, and pedestrian areas. Equipped with the latest generation of LEDs, it delivers excellent lighting performance with low energy consumption and a refined, non-intrusive presence, perfectly suited to contemporary urban settings. The optics with rotosymmetric and asymmetric distributions provide uniform, well-controlled, and glare-free lighting, improving visual comfort and user safety. These features make this luminaire an ideal solution for lighting green spaces, pedestrian zones, residential areas, and urban spaces, helping to create pleasant, safe, and sustainable environments.

ISEO, THE IDEAL LUMINAIRE FOR GREEN SPACES, URBAN AND RESIDENTIAL AREAS: in a single body frame, you have a fully equipped luminaire designed to meet any need, including the possibility to **select the desired colour temperature in 3 power wattages**, maintaining aesthetic continuity while differentiating the amount of light emitted. These features make it the ideal choice for lighting parks, pedestrian areas, residential zones and urban public spaces.

ISEO is available as standard with a **1800K** and **2200K** colour temperature to reproduce a cosy ambient light associated with sunset. In this way, the artificial light becomes a less invasive element in the environment, **respecting the needs of the surrounding flora and fauna**.

Research has shown that different types of lighting can significantly impact nocturnal insects, birds and other creatures that play a vital role in local ecosystems. Environmental organisations are increasingly calling for this aspect to be properly considered in the design of new lighting systems. Modern LEDs, with a reduced blue light component, provide an opportunity to create less disruptive lighting in streets or parking areas near green spaces, while offering better protection for local wildlife.

1800K 2200K **1800K - 2200K:** lamps with warm light at a colour temperature of 1800K-2200K *reduces the risks of an excessive exposure to harmful blue LED light* and allows a "softer" impact on inhabited zones, especially in historic centres.







ISEO come with colour temperatures of **2700K**, **3000K** and **4000K**. These versions are ideal for urban spaces such as public parks, squares, and historic town centres that require an illumination that enhance architectural features while ensuring pedestrian safety, visual comfort, and minimising light pollution

2700K 3000K 4000K **2700K - 3000K - 4000K:** lamps with 2700K-3000K-4000K white light, instead, is the best choice for lighting up urban areas, streets, residential centres and generally all areas where this type of light guarantees greater safety and visual comfort.

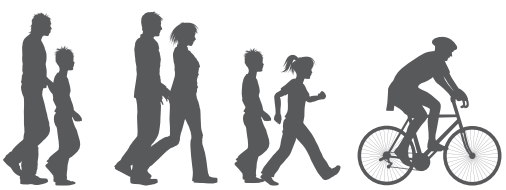





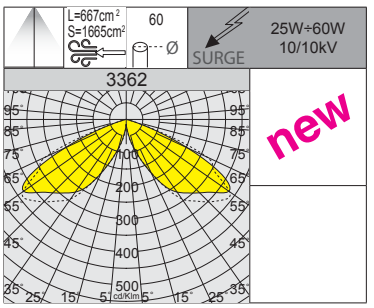

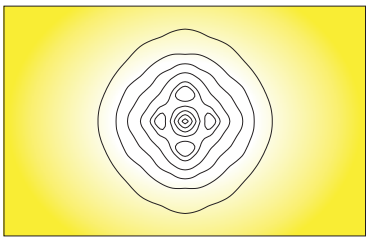



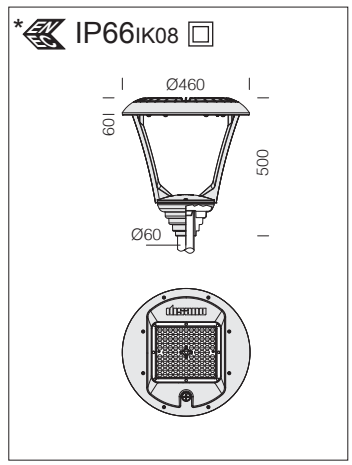

LED: power factor ≥0.9.
Luminous flux maintenance 80%: 100.000h (L80B20).

3362 Iseo 3 - CCT 1800K-2200K / POWER SWITCH - rotosymmetric

		CLD			LUMEN OUTPUT (tq= 25 °C)
LED	colour	weight	code	W tot	K - ølm - CRI
LED	RAL 7021	6.10	330584-00	25	1800K - **2338lm** - CRI>80
					2200K - **2694lm** - CRI>80
				45	1800K - **4211lm** - CRI>80
					2200K - **4851lm** - CRI>80
				60	1800K - **5613lm** - CRI>80
					2200K - **6468lm** - CRI>80

Ideal for lighting up historic town centres, residential areas, parks, and protected areas, **while respecting the needs of nocturnal flora and fauna**.

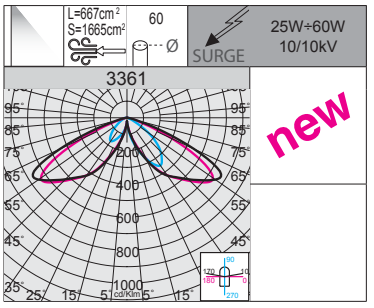

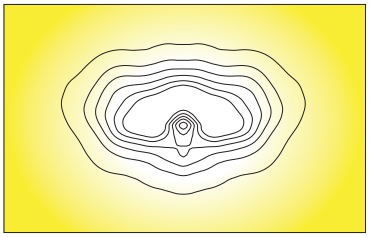



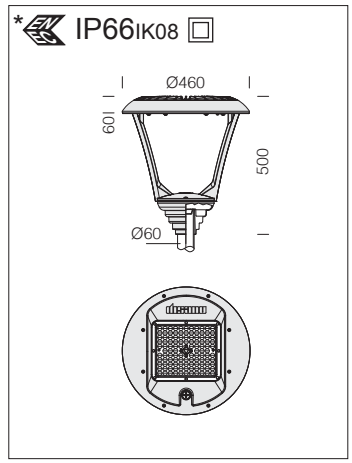

LED: power factor ≥0.9.
Luminous flux maintenance 80%: 100.000h (L80B20).

3361 Iseo 2 - CCT 1800K-2200K / POWER SWITCH - asymmetric

		CLD			LUMEN OUTPUT (tq= 25 °C)
LED	colour	weight	code	W tot	K - ølm - CRI
LED	RAL 7021	6.10	330574-00	25	1800K - **2229lm** - CRI>80
					2200K - **2568lm** - CRI>80
				45	1800K - **4014lm** - CRI>80
					2200K - **4624lm** - CRI>80
				60	1800K - **5352lm** - CRI>80
					2200K - **6167lm** - CRI>80

Ideal for lighting up historic town centres, residential areas, parks, and protected areas, **while respecting the needs of nocturnal flora and fauna**.

*IP66 IK08

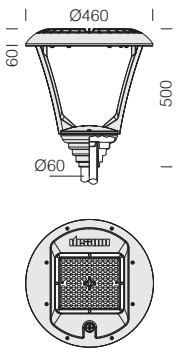

LED: power factor ≥0.9.
Luminous flux maintenance 80%: 100.000h (L80B20).



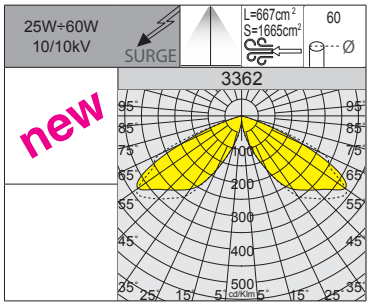

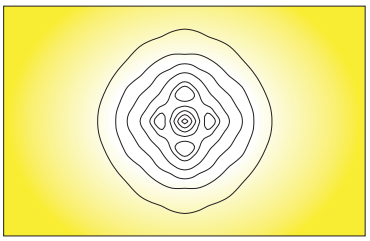

RG0 Ethr
+45 C° -40
U.V.
LOW FLICKER
CCT POWER

3362 Iseo 3 - CCT 2700K-3000K-4000K / POWER SWITCH - rotosymmetric

		CLD			LUMEN OUTPUT (tq= 25 °C)
LED	colour	weight	code	W tot	K - ølm - CRI
LED	RAL 7021	6.10	330583-00	**25**	2700K - **3150lm** - CRI>80
					3000K - **3384lm** - CRI>80
					4000K - **3465lm** - CRI>80
				45	2700K - **5670lm** - CRI>80
					3000K - **6098lm** - CRI>80
					4000K - **6237lm** - CRI>80
				60	2700K - **7560lm** - CRI>80
					3000K - **8132lm** - CRI>80
					4000K - **8316lm** - CRI>80

*IP66 IK08

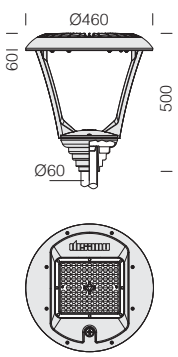

LED: power factor ≥0.9.
Luminous flux maintenance 80%: 100.000h (L80B20).



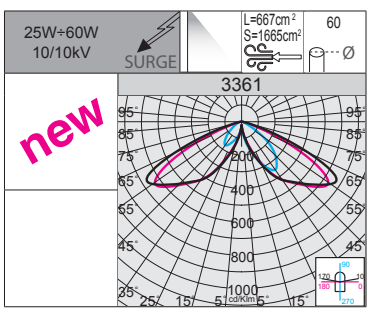

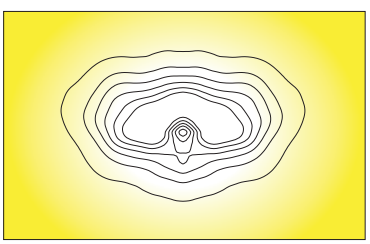

RG0 Ethr
+45 C° -40
U.V.
LOW FLICKER
CCT POWER

3361 Iseo 2 - CCT 2700K-3000K-4000K / POWER SWITCH - asymmetric

		CLD			LUMEN OUTPUT (tq= 25 °C)
LED	colore	peso	codice	W tot	K - ølm - CRI
LED	RAL 7021	6.10	330573-00	**25**	2700K - **3003lm** - CRI>80
					3000K - **3230lm** - CRI>80
					4000K - **3303lm** - CRI>80
				45	2700K - **5404lm** - CRI>80
					3000K - **5815lm** - CRI>80
					4000K - **5946lm** - CRI>80
				60	2700K - **7206lm** - CRI>80
					3000K - **7753lm** - CRI>80
					4000K - **7929lm** - CRI>80



GENERAL CHARACTERISTICS

Housing and arms: pressed in die-cast aluminium and designed with a very small surface exposed to wind.

Optics: made of PMMA with high temperature resistance and UV rays.

Pole connection: suited for poles with a diameter 60-76mm.

Diffuser: extra-clear tempered glass, 4 mm thick, resistant to thermal shocks and impacts (UNI-EN 12150-1: 2001).

Coating: the fully automated powder-coating cycle involves a polyester-based, salt-spray corrosion-resistant and UV-stabilised paint.

Upon request: protective coating recommended for marine environments within 5 km of the sea.

Equipment: nylon wiring plate 30% fibre glass complete with waterproof connector for quick installation. Automatic temperature control inside the device with automatic resetting. With dedicated electronic device to protect the LED module. Equipped with an air-circulation valve.

OTHER CHARACTERISTICS

SURGE

Electronic safety device to protect the LED module and the related ballast compliant with EN 61547.
It works in two modes:
- differential mode: surge between power cables and between the phase and neutral.
- common mode: surge between power, L/N and ground cables or between the fixture's body if it is of class II and installed on a metal pole.

LOW FLICKER

Product with a very low flicker; uniform light for greater eye protection.

Available versions in colour
GREEN **RAL 6024**
WHITE **RAL 9003**
GREY **RAL 9006**



THE RANGE OF COMO STREET LAMPS IS AVAILABLE IN THE FOLLOWING COLOUR TEMPERATURES:

2200K **2200K (subcode -73):** lamps with warm amber light at a colour temperature of 2200K reduces the risks of an excessive exposure to harmful blue LED light and allows a "softer" impact on inhabited zones, especially in historic centres.

3000K 4000K **3000K - 4000K as standard:** lamps with 3000K-4000K white light, instead, is the best choice for lighting up urban areas, streets, residential centres and generally all areas where this type of light guarantees greater safety and visual comfort.



CLD PROG

PROG (CLD PROG) AVAILABLE FUNCTIONS

Luminous flux setup	This can be done by programming the drive current values requested when ordering/purchasing the fixture
CLO (Constant Light Output)	The lighting fixture maintains a constant light output throughout its entire service life

LIGHTING POINT MANAGEMENT OPTIONS ON REQUEST

possibility to choose different lighting point management systems according to the system's needs:

1-10V dimming ordered with **sub-code -12**	Adjustment range from 10%-100% with 1-10V
Virtual Midnight order with **subcode -30**	Stand-alone system with automatic luminous flux reduction in **4 steps**. To increase energy savings at night when there are fewer people and vehicles around, a lighting fixture can be programmed according to a specific profile (customizable on request). The fixture reduces its luminous flux through a self-learning process which, depending on the previous switching on and off times, will determine a hypothetical "virtual midnight". This is the average value between the time the fixture is switched on (sunset) and switched off (sunrise). The "virtual midnight" is the reference point for dimming lights according to the desired profile. The device is integrated in the LED driver and therefore does not require any modification to the system. *In order for the system to function correctly, the system must be adjusted by a device that turns the system on and off on a regular basis every day.* ***ATTENTION:*** *original settings and time slots for the "virtual midnight" value can be customized in up to 5 steps upon request.*

Factory settings

Time	Flux
on ÷ 22:00	100%
22:00 ÷ 23:30	75%
23:30 ÷ 02:30	50%
02:30 ÷ 04:00	75%
04:00 ÷ off	100%

PLC remote control ordered with **sub-code -0078**	Point-to-point and system management and diagnosis system

For more information see page XX-XXIII



Exemple with Zhaga Socket (subcode -0054)

LUMINAIRE DESIGNED FOR INSTALLATION ON NEMA OR ZHAGA SOCKET: to monitor and manage public lighting centrally, lighting fixtures will always be more equipped with wireless controls that will allow their integration with the IoT. Today the market offers two solutions: **NEMA and ZHAGA**. Both solutions offer an electrical and mechanical connection between the control antenna and the lighting fixture.

Nema Socket order with **subcode -40** (sealing cap to be ordered separately)	Mounted directly on the fixture's body, ideal for remote lighting management applications.
Zhaga Socket order with **subcode -0054** (complete with sealing cap)	

RG0 Ethr
+40 C° -30
U.V.
LOW FLICKER
3000K
4000K

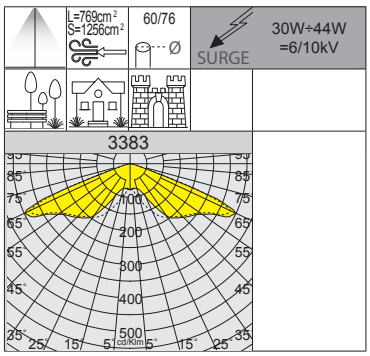

2200K - AMBER (sub-code -73)	
W tot	**LUMEN OUTPUT (tq= 25 °C)**
30	2200K - 3851lm
44	2200K - 5542lm



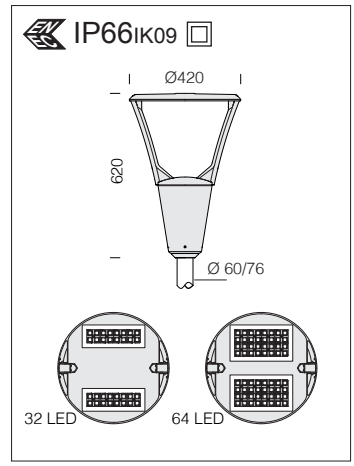

LED: power factor: ≥0,9.
Luminous flux maintenance 90%: >100.000h (L90B10).

3383 Como 1 - bisymmetric

		CLD PROG		CLD MIDNIGHT	CLD ZHAGA		LUMEN OUTPUT (tq= 25 °C)
LED	colour	weight	code	code	code	W tot	K - ølm - CRI
LED	RAL 7021	5.90	340552-00	340552-30	340552-0054	**30**	4000K - 4530lm - CRI 70
			340552-39	340552-3028	340552-3954		3000K - 4210lm - CRI 70
LED	RAL 7021	5.90	340553-00	340553-30	340553-0054	**44**	4000K - 6520lm - CRI 70
			340553-39	340553-3028	340553-3954		3000K - 6160lm - CRI 70

RG0 Ethr
+40 C° -30
U.V.
LOW FLICKER
3000K
4000K

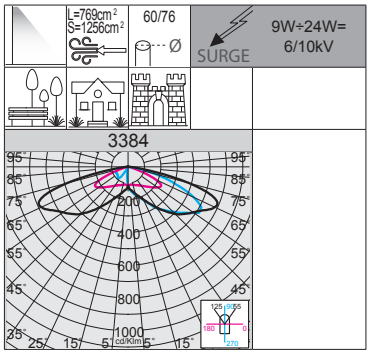

2200K - AMBER (sub-code -73)	
W tot	**LUMEN OUTPUT (tq= 25 °C)**
9	2200K - 1207lm
24	2200K - 2941lm



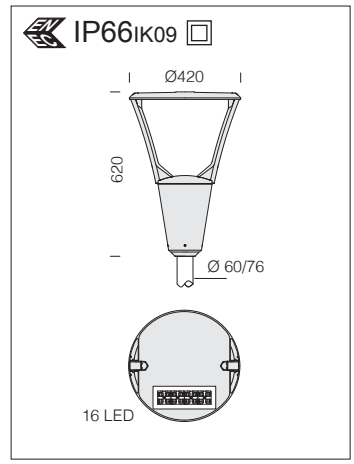

LED: power factor: ≥0,9.
Luminous flux maintenance 90%: >100.000h (L90B10).

3384 Como 2 - asymmetric large areas

		CLD PROG		CLD MIDNIGHT	CLD ZHAGA		LUMEN OUTPUT (tq= 25 °C)
LED	colour	weight	code	code	code	W tot	K - ølm - CRI
LED	RAL 7021	5.90	340560-00	340560-30	340560-0054	**9**	4000K - 1420lm - CRI 70
			340560-39	340560-3028	340560-3954		3000K - 1340lm - CRI 70
LED	RAL 7021	5.90	340561-00	340561-30	340561-0054	**24**	4000K - 3460lm - CRI 70
			340561-39	340561-3028	340561-3954		3000K - 3270lm - CRI 70

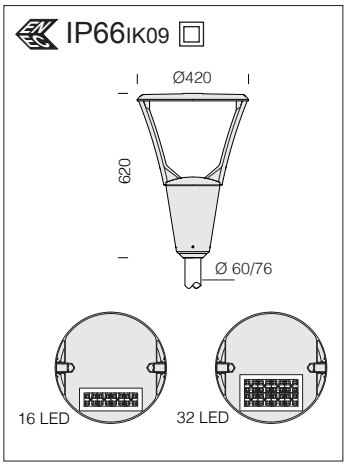



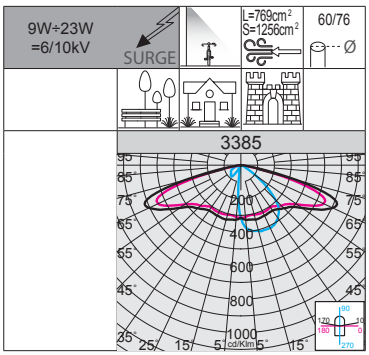

LED: power factor: ≥0,9.
Luminous flux maintenance 90%: >100.000h (L90B10).

2200K - AMBER (sub-code -73)	
W tot	**LUMEN OUTPUT (tq= 25 °C)**
9	2200K - 1224lm
23	2200K - 3001lm

3385 Como 3 - cycleways

		CLD PROG	CLD MIDNIGHT	CLD ZHAGA		LUMEN OUTPUT (tq= 25 °C)
LED	colour	weight	code	code	code	W tot	K - ølm - CRI
LED	RAL 7021	5.90	340570-00	340570-30	340570-0054	**9**	4000K - 1440lm - CRI 70
			340570-39	340570-3028	340570-3954		3000K - 1360lm - CRI 70
LED	RAL 7021	5.90	340572-00	340572-30	340572-0054	**23**	4000K - 3530lm - CRI 70
			340572-39	340572-3028	340572-3954		3000K - 3330lm - CRI 70

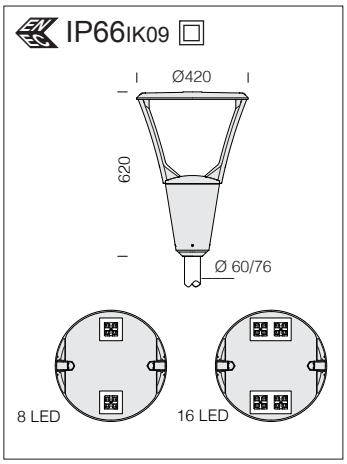



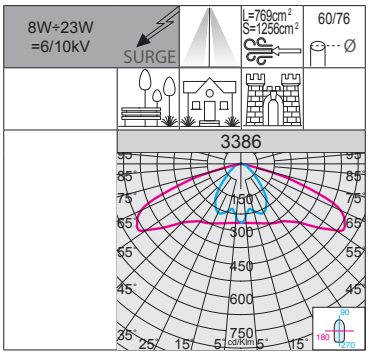

LED: power factor: ≥0,9.
Luminous flux maintenance 90%: >100.000h (L90B10).

2200K - AMBER (sub-code -73)	
W tot	**LUMEN OUTPUT (tq= 25 °C)**
8	2200K - 1267lm
23	2200K - 3633lm

3386 Como 4 - bi-asymmetric

		CLD PROG	CLD MIDNIGHT	CLD ZHAGA		LUMEN OUTPUT (tq= 25 °C)
LED	colour	weight	code	code	code	W tot	K - ølm - CRI
LED	RAL 7021	5.90	340580-00	340580-30	340580-0054	**8**	4000K - 1490lm - CRI 70
			340580-39	340580-3028	340580-3954		3000K - 1386lm - CRI 70
LED	RAL 7021	5.90	340581-00	340581-30	340581-0054	**23**	4000K - 4274lm - CRI 70
			340581-39	340581-3028	340581-3954		3000K - 3975lm - CRI 70



GENERAL CHARACTERISTICS

Housing and arms: pressed in die-cast aluminium and designed with a very small surface exposed to wind.

Optics: made of PMMA with high temperature resistance and UV rays.

Pole connection: suited for poles with a diameter 60-76mm.

Diffuser: extra-clear tempered glass, 4 mm thick, resistant to thermal shocks and impacts (UNI-EN 12150-1: 2001).

Coating: the fully automated powder-coating cycle involves a polyester-based, salt-spray corrosion-resistant and UV-stabilised paint.

Upon request: protective coating recommended for marine environments within 5 km of the sea.

Equipment: nylon wiring plate 30% fibre glass complete with waterproof connector for quick installation. Automatic temperature control inside the device with automatic resetting. With dedicated electronic device to protect the LED module. Equipped with an air-circulation valve.

OTHER CHARACTERISTICS

SURGE Electronic safety device to protect the LED module and the related ballast compliant with EN 61547.
It works in two modes:
- differential mode: surge between power cables and between the phase and neutral.
- common mode: surge between power, L/N and ground cables or between the fixture's body if it is of class II and installed on a metal pole.

LOW FLICKER Product with a very low flicker; uniform light for greater eye protection.

Available versions in colour
GREEN **RAL 6024**
WHITE **RAL 9003**
GREY **RAL 9006**



THE RANGE OF GARDA STREET LAMPS IS AVAILABLE IN THE FOLLOWING COLOUR TEMPERATURES:

2200K **2200K (subcode -73):** lamps with warm amber light at a colour temperature of 2200K reduces the risks of an excessive exposure to harmful blue LED light and allows a "softer" impact on inhabited zones, especially in historic centres.

3000K 4000K **3000K - 4000K as standard:** lamps with 3000K-4000K white light, instead, is the best choice for lighting up urban areas, streets, residential centres and generally all areas where this type of light guarantees greater safety and visual comfort.

Exemple with Zhaga Socket (subcode -0054)



LUMINAIRE DESIGNED FOR INSTALLATION ON NEMA OR ZHAGA SOCKET: to monitor and manage public lighting centrally, lighting fixtures will always be more equipped with wireless controls that will allow their integration with the IoT. Today the market offers two solutions: **NEMA and ZHAGA**. Both solutions offer an electrical and mechanical connection between the control antenna and the lighting fixture.

Nema Socket order with **subcode -40** (sealing cap to be ordered separately)	**Zhaga Socket** order with **subcode -0054** (complete with sealing cap)
Mounted directly on the fixture's body, ideal for remote lighting management applications.	

ACCESSORIES

acc. 109 anti-glare shield	
RAL 7021	991312-00
To prevent glare effects. To be fitted when Garda is installed near a window.	

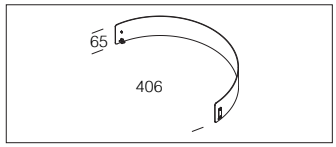

CLD PROG

PROG (CLD PROG) AVAILABLE FUNCTIONS

Luminous flux setup	This can be done by programming the drive current values requested when ordering/purchasing the fixture
CLO (Constant Light Output)	The lighting fixture maintains a constant light output throughout its entire service life

LIGHTING POINT MANAGEMENT OPTIONS ON REQUEST

possibility to choose different lighting point management systems according to the system's needs:

1-10V dimming ordered with **sub-code -12**	Adjustment range from 10%-100% with 1-10V
Virtual Midnight order with **subcode -30**	Stand-alone system with automatic luminous flux reduction in **4 steps**. To increase energy savings at night when there are fewer people and vehicles around, a lighting fixture can be programmed according to a specific profile (customizable on request). The fixture reduces its luminous flux through a self-learning process which, depending on the previous switching on and off times, will determine a hypothetical "virtual midnight". This is the average value between the time the fixture is switched on (sunset) and switched off (sunrise). The "virtual midnight" is the reference point for dimming lights according to the desired profile. The device is integrated in the LED driver and therefore does not require any modification to the system. *In order for the system to function correctly, the system must be adjusted by a device that turns the system on and off on a regular basis every day.* ***ATTENTION:*** *original settings and time slots for the "virtual midnight" value can be customized in up to 5 steps upon request.*

Factory settings	
Time	**Flux**
on ÷ 22:00	100%
22:00 ÷ 23:30	75%
23:30 ÷ 02:30	50%
02:30 ÷ 04:00	75%
04:00 ÷ off	100%

PLC remote control ordered with **sub-code -0078**	Point-to-point and system management and diagnosis system

For more information see page XX-XXIII

OTHER EXAMPLES OF IRTUAL MIDNIGHT CONFIGURATION

For example, in the central hours of the night, in areas where car and pedestrian traffic decreases significantly, a **reduction in luminous flux keeps the light within safety standards, while avoiding waste**. If we multiply this reduction by tens or hundreds of lamps, we get **significant savings**.

Virtual midnight in 2 steps subcode -35

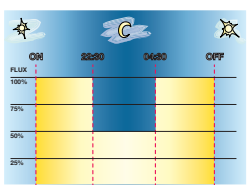

Settings upon request	
Time	**Flux**
on ÷ 22:30	100%
22:30 ÷ 04:30	50%
04:30 ÷ off	100%

Virtual midnight in 5 steps subcode -32

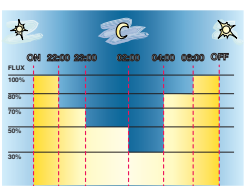

Settings upon request	
Time	**Flux**
on ÷ 22:00	100%
22:00 ÷ 23:00	70%
23:00 ÷ 02:00	50%
02:00 ÷ 04:00	30%
04:00 ÷ 06:00	80%
06:00 ÷ off	100%

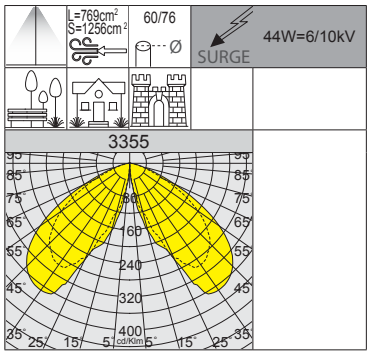



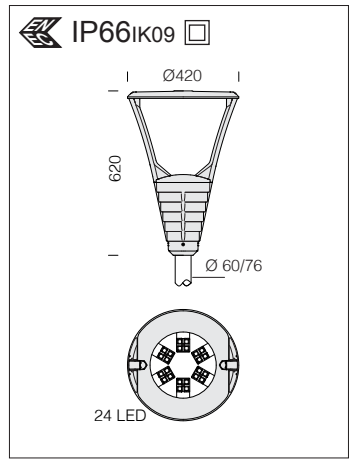

2200K - AMBER (sub-code -73)	
W tot	LUMEN OUTPUT (tq= 25 °C)
44	2200K - 4902lm

LED: power factor ≥0.9.
Luminous flux maintenance 90% : >100.000h (L90B10)

3355 Garda 5 - rotosymmetric

		CLD PROG		CLD MIDNIGHT	CLD ZHAGA		LUMEN OUTPUT (tq= 25 °C)
LED	colour	weight	code	code	code	W tot	K - ølm - CRI
LED	RAL 7021	6.00	330550-00	330550-30	330550-0054	**44**	4000K - 5767lm - CRI 70
			330550-39	330550-3028	330550-3954		3000K - 5363lm - CRI 70

3355 Garda 6 - rotosymmetric

		CLD PROG		CLD MIDNIGHT	CLD ZHAGA		LUMEN OUTPUT (tq= 25 °C)
LED	colour	weight	code	code	code	W tot	K - ølm - CRI
LED	RAL 7021	6.00	330551-00	330551-30	330551-0054	**44**	4000K - 5851lm - CRI 70
			330551-39	330551-3028	330551-3954		3000K - 5441lm - CRI 70

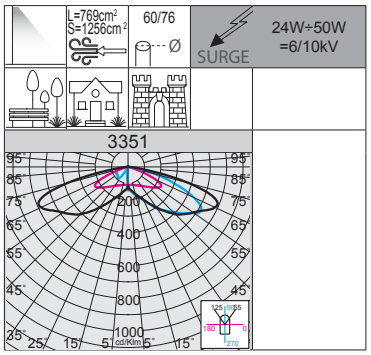



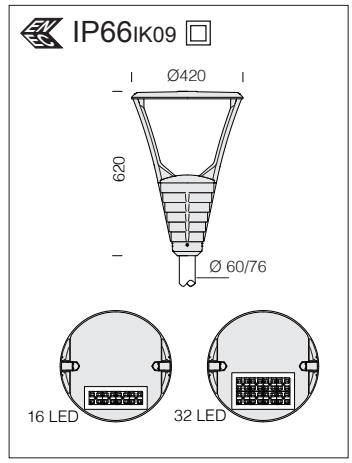

Upon request (sub-code -60)	
LED	4000K - CRI 80

LED: power factor ≥0.9.
Luminous flux maintenance 80%: >100.000h (L80B10).

3351 Garda 2 - asymmetric large areas

		CLD PROG		CLD MIDNIGHT	CLD ZHAGA		LUMEN OUTPUT (tq= 25 °C)
LED	colour	weight	code	code	code	W tot	K - ølm - CRI
LED	RAL 7021	6.00	330520-00	330520-30	330520-0054	**24**	4000K - 3460lm - CRI 70
			330520-39	330520-3028	330520-3954		3000K - 3270lm - CRI 70
LED	RAL 7021	6.00	330521-00	330521-30	330521-0054	**50**	4000K - 7210lm - CRI 70
			330521-39	330521-3028	330521-3954		3000K - 6810lm - CRI 70

Example	Power supply	n.LED	W tot	K	ølm
upon request	330mA	16	**15**	**4000K**	2320lm
		32	**30**		4560lm

n.LED	W tot	K	ølm
16	**15**	**3000K**	2158lm
32	**30**		4241lm

IP66 IK09

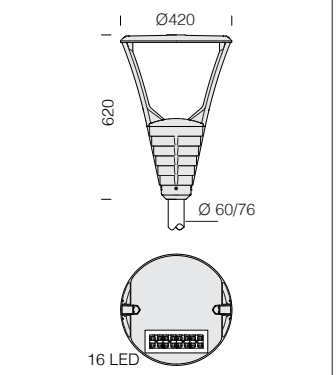



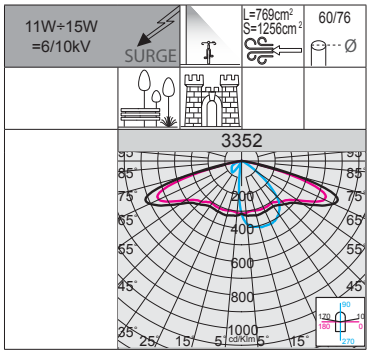

LED: power factor ≥0.9.
Luminous flux maintenance 90% : >100.000h (L90B10)

2200K - AMBER (sub-code -73)	
W tot	**LUMEN OUTPUT (tq= 25 °C)**
11	2200K - 1522lm
15	2200K - 1938lm

3352 Garda 3 - cycle-pedestrian

			CLD PROG	CLD MIDNIGHT	CLD ZHAGA		LUMEN OUTPUT (tq= 25 °C)
LED	colour	weight	code	code	code	W tot	K - ølm - CRI
LED	RAL 7021	6.00	330530-00	330530-30	330530-0054	**11**	4000K - 1790lm - CRI 70
			330530-39	330530-3028	330530-3954		3000K - 1680lm - CRI 70
LED	RAL 7021	6.00	330531-00	330531-30	330531-0054	**15**	4000K - 2280lm - CRI 70
			330531-39	330531-3028	330531-3954		3000K - 2160lm - CRI 70

Example	Power supply	n.LED	W tot	K	ølm
upon request	500mA	16	**24**	**4000K**	3500lm
	330mA	32	**30**		4630lm
	530mA	32	**50**		7300lm

n.LED	W tot	K	ølm
16	**24**	**3000K**	3255lm
32	**30**		4306m
32	**50**		6789lm

IP66 IK09

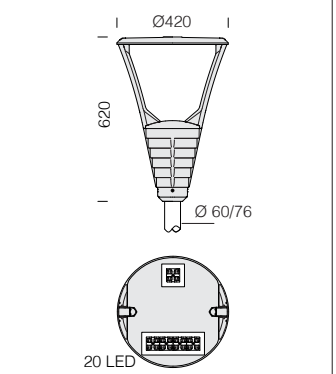



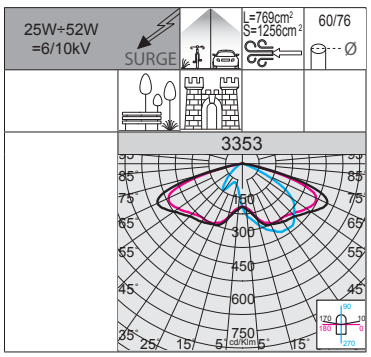

LED: power factor ≥0.9.
Luminous flux maintenance 80%: >100.000h (L80B10).

Upon request (sub-code -60)	
LED	4000K - CRI 80

3353 Garda 4 - residential amenities + cycle-pedestrian

			CLD PROG	CLD MIDNIGHT	CLD ZHAGA		LUMEN OUTPUT (tq= 25 °C)
LED	colour	weight	code	code	code	W tot	K - ølm - CRI
LED	RAL 7021	6.00	330540-00	330540-30	330540-0054	**25**	4000K - 3520lm - CRI 70
			330540-39	330540-3028	330540-3954		3000K - 3230lm - CRI 70
LED	RAL 7021	6.00	330541-00	330541-30	330541-0054	**52**	4000K - 6660lm - CRI 70
			330541-39	330541-3028	330541-3954		3000K - 6300lm - CRI 70

Example	Power supply	n.LED	W tot	K	ølm
upon request	220mA	20	**12**	**4000K**	1870lm
	280mA		**16**		2370lm
	560mA		**33**		4560lm

n.LED	W tot	K	ølm
20	**12**	**3000K**	1739lm
	16		2204lm
	33		4241lm

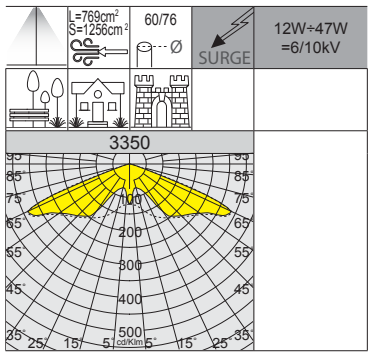



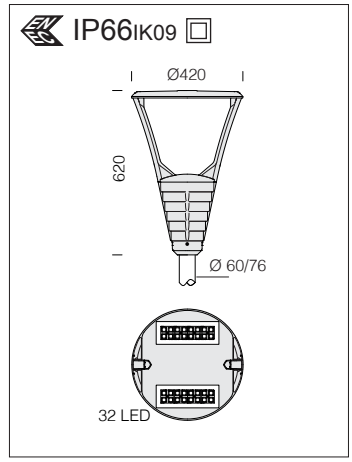

Upon request (sub-code -60)	
LED	4000K - CRI 80

LED: power factor ≥0.9.
Luminous flux maintenance 90%: >100.000h (L90B10).

3350 Garda 1 HE - HIGH EFFICIENCY - bisymmetric

			CLD PROG	CLD MIDNIGHT		LUMEN OUTPUT (tq= 25 °C)
LED	colour	weight	code	code	W tot	K - ølm - CRI
LED	RAL 7021	5.30	330512-00	330512-30	**12**	4000K - 1830lm - CRI 70
			330512-39	330512-3028		3000K - 1730lm - CRI 70
LED	RAL 7021	6.00	330518-00	330518-30	**15**	4000K - 2300lm - CRI 70
			330518-39	330518-3028		3000K - 2165lm - CRI 70
LED	RAL 7021	5.50	330510-00	330510-30	**24**	4000K - 3530lm - CRI 70
			330510-39	330510-3028		3000K - 3330lm - CRI 70
LED	RAL 7021	6.00	330517-00	330517-30	**31**	4000K - 4510lm - CRI 70
			330517-39	330517-3028		3000K - 4264lm - CRI 70
LED	RAL 7021	6.00	330511-00	330511-30	**47**	4000K - 6540lm - CRI 70
			330511-39	330511-3028		3000K - 6190lm - CRI 70

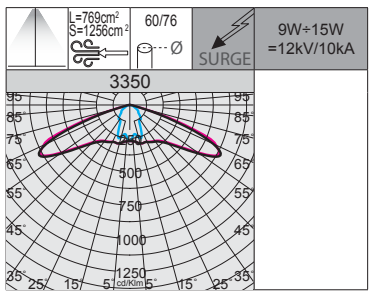

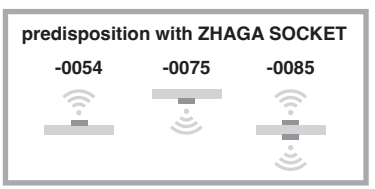



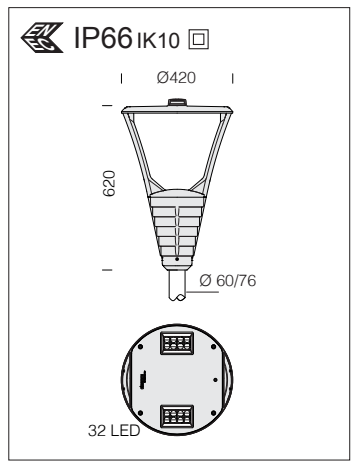

Upon request (sub-code -60)	
LED	4000K - CRI 80

LED: power factor ≥0.9.
Luminous flux maintenance 90%: >100.000h (L90B10).

3350 Garda 1 HE - SMART

			CLD ZHAGA				LUMEN OUTPUT (tq= 25 °C)
LED	colour	weight	code	code	code	W tot	K - ølm - CRI
LED	RAL 7016	6.00	330512-0054	330512-0075	330512-0085	**9**	4000K - 1407lm - CRI 70
			330512-3954	330512-3975	330512-3985		3000K - 1337lm - CRI 70
LED	RAL 7016	6.00	330518-0054	330518-0075	330518-0085	**10**	4000K - 1573lm - CRI 70
			330518-3954	330518-3975	330518-3985		3000K - 1494lm - CRI 70
LED	RAL 7016	6.00	330510-0054	330510-0075	330510-0085	**12**	4000K - 1930lm - CRI 70
			330510-3954	330510-3975	330510-3985		3000K - 1833lm - CRI 70
LED	RAL 7016	6.00	330517-0054	330517-0075	330517-0085	**13**	4000K - 2177lm - CRI 70
			330517-3954	330517-3975	330517-3985		3000K - 2068lm - CRI 70
LED	RAL 7016	6.00	330511-0054	330511-0075	330511-0085	**14**	4000K - 2324lm - CRI 70
			330511-3954	330511-3975	330511-3985		3000K - 2208lm - CRI 70

IP66 IK09

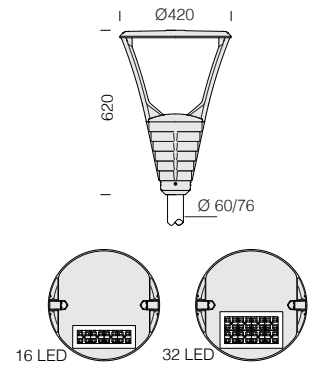



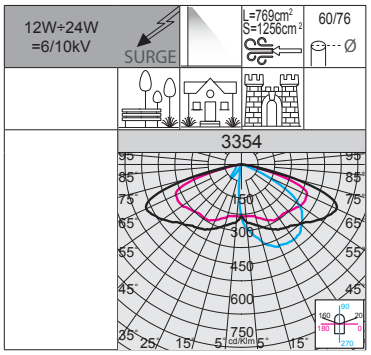

LED: power factor ≥0.9.
Luminous flux maintenance 90%: >100.000h (L90B10).

Upon request (sub-code -60)	
LED	4000K - CRI 80

3354 Garda 7 - asymmetric medium beam

		CLD PROG		CLD MIDNIGHT		LUMEN OUTPUT (tq= 25 °C)
LED	colour	weight	code	code	W tot	K - ølm - CRI
LED	RAL 7021	6.00	330532-00	330532-30	**12**	4000K - 1830lm - CRI 70
			330532-39	330532-3028		3000K - 1730lm - CRI 70
LED	RAL 7021	6.00	330533-00	330533-30	**16**	4000K - 2290lm - CRI 70
			330533-39	330533-3028		3000K - 2170lm - CRI 70
LED	RAL 7021	6.00	330534-00	330534-30	**24**	4000K - 3470lm - CRI 70
			330534-39	330534-3028		3000K - 3280lm - CRI 70

Example	Power supply	n.LED	W tot	K	ølm
upon request	340mA	32	**31**	**4000K**	4450lm
	530mA		**50**		6920lm

n.LED	W tot	K	ølm
32	**31**	**3000K**	4220lm
	50		6540lm

IP66 IK10

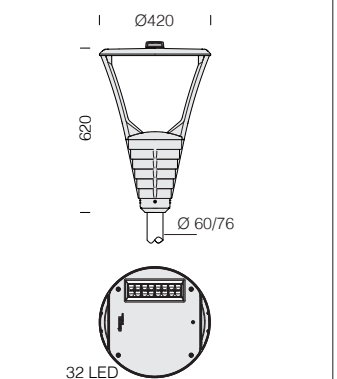



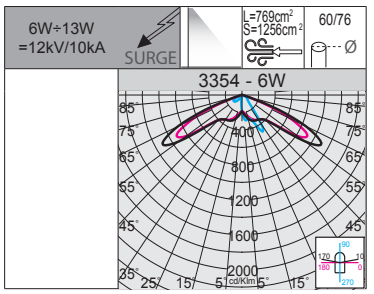

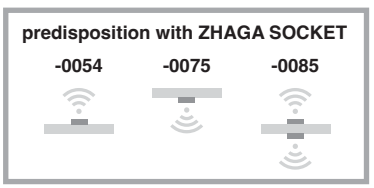

LED: power factor ≥0.9.
Luminous flux maintenance 90%: >100.000h (L90B10).

Upon request (sub-code -60)	
LED	4000K - CRI 80

3354 Garda 7 - asymmetric - SMART

		CLD ZHAGA					LUMEN OUTPUT (tq= 25 °C)
LED	colour	weight	code	code	code	W tot	K - ølm - CRI
LED	RAL 7016	6.00	330532-0054	330532-0075	330532-0085	**6**	4000K - 921lm - CRI 70
			330532-3954	330532-3975	330532-3985		3000K - 875lm - CRI 70
LED	RAL 7016	6.00	330533-0054	330533-0075	330533-0085	**9**	4000K - 1460lm - CRI 70
			330533-3954	330533-3975	330533-3985		3000K - 1387lm - CRI 70
LED	RAL 7016	6.00	330534-0054	330534-0075	330534-0085	**12**	4000K - 1964lm - CRI 70
			330534-3954	330534-3975	330534-3985		3000K - 1866lm - CRI 70

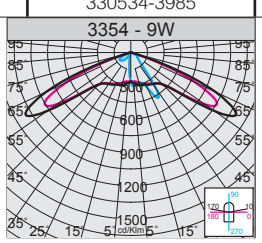

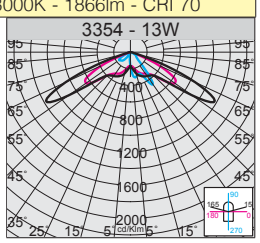

You can make your lighting system **SMART** by integrating sensors into the fixture so that it can detect the movement of people within a given detection area and automatically adjust light intensity according to previously established light levels and delay times. You will also achieve high **energy savings** without affecting the safety and visual comfort of pedestrians.

The lighting fixtures with **sub-code -1219 complete with motion sensors** are a functional lighting solution for public spaces. The ability to control the light flux without people moving in a space will let you **optimize operating costs**, while achieving notable **economic savings**. This lighting solution is best suited for public or private streets, cycle lanes, private roads, parks and, in general, for any installation where smart lighting control is required.

Energy savings

The ability of these fixtures to sense the presence of people transiting in a space through integrated motion sensors will significantly reduce the waste of light, especially at night, and achieve lower energy costs.

Safety

At night-time, the number of people using urban areas, such as parks, is quite low. Therefore, reducing the light flux using fixtures with integrated motion sensors is the ideal solution to always ensure adequate lighting levels.

Green lighting

Installing lighting fixtures with integrated motion sensors that will switch lights on only when people are around is the first step towards becoming a greener city, where spaces are more liveable and safer, without wasting energy and leaving a lesser impact on the environment.

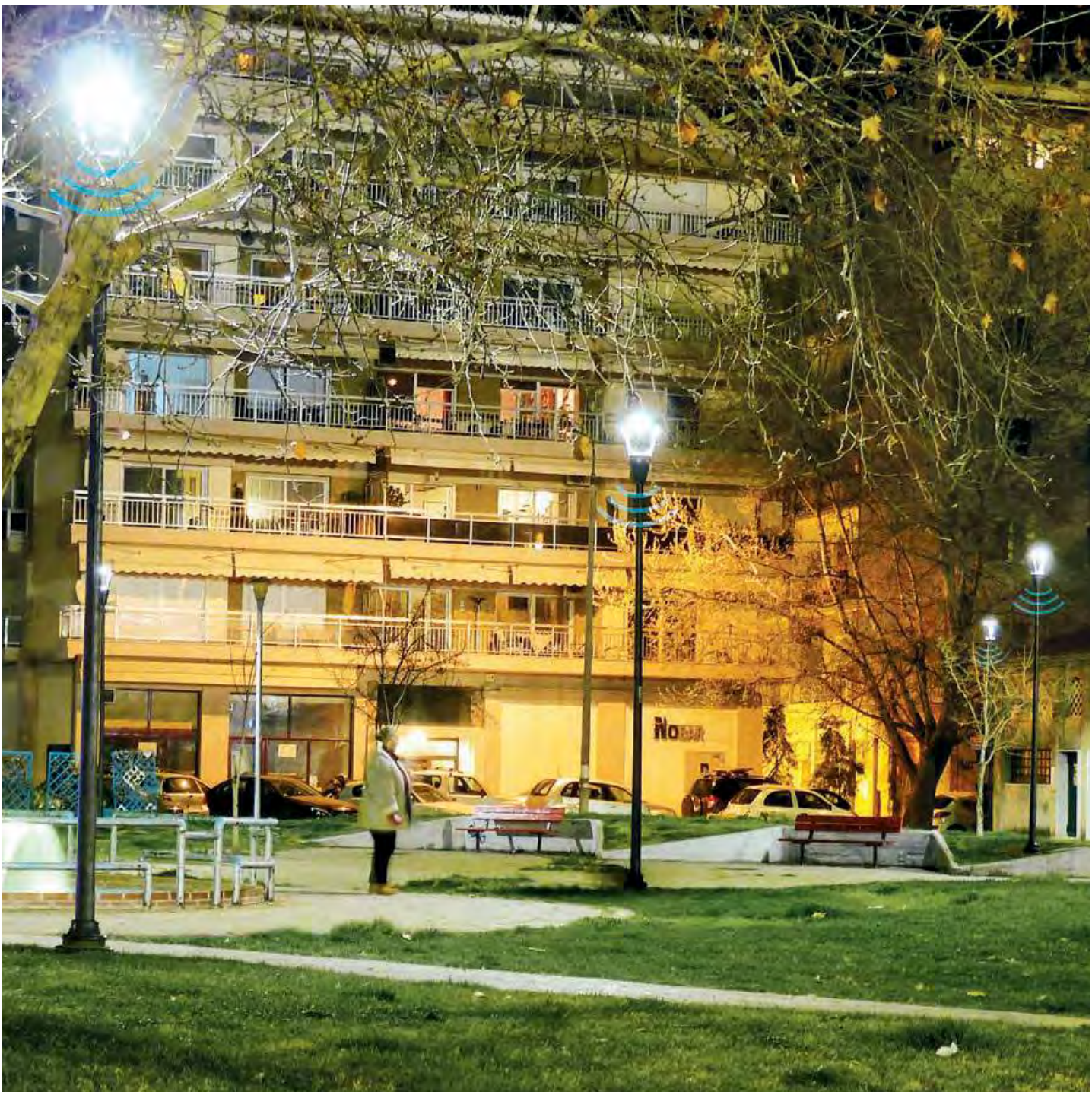

Motion sensor - STAND-ALONE

Garda with sub-code -1219: lighting fixture complete with stand-alone motion sensor with 0/10V control.

TECHNICAL SPECIFICATIONS	
Frequency	5.8GHz±75MHz
Stand-by power	≤1W
Setting	telecomando
Hold time (adjustable)	5s / 30s / 1min / 3min / 5min / 10min / 20min / 30min
Ambient light (adjustable)	2lux / 10lux /30lux / 50lux / OFF
Stand-by time (adjustable)	0s / 10s / 30s / 1min / 5min / 10min / 30min /+ ∞
Stand-by dimming level (adjustable)	20% / 30% / 50%
Detection area	50% - 75% - 100%
Detection angle	30° - 150°
Technology	Microwave



Remote control cod. **81418618** (to be purchased separately) that **allows modification of the fixture parameters after installation**.



DEFAULT SETTINGS

The fixtures is supplied as standard with the following parameters

Hold time	5s
Ambient light	OFF
Stand-by time	0s
Stand-by dimming level	10%
Detection area	100%

NOTE: when placing your order, it is possible upon request a customized configuration that you need to set.

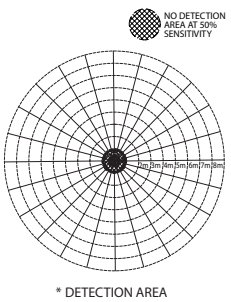

* DETECTION AREA

*** specifications for each detection area** (varies depending on the available versions) can be requested at our customer service.

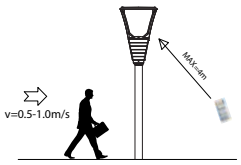

TYPICAL DETECTION AREA AT INSTALLATION HEIGHT 4-6m

A) Detection area: the sensor will turn the lights on when it detects motion in this area; with a 100% detection area the sensitivity level is high.

B) Hold time: the period of time during which lights stay on at full brightness after a person or object has left the detection area.

C) Ambient light: when the level of light inside a room is below a pre-determined threshold, the sensor will trigger the lights on; when set to 'disable', the sensor will operate whenever it detects movement regardless of the amount of light in the room.

D) Stand-by time: refers to the time the sensor keeps the lights at a dim level after the hold time.

E) Stand-by dimming level: is the lights' dimming level during the stand-by time.

EXAMPLE OF OPERATION

The lighting fixtures with **sub-code -1219** complete with motion sensors will adjust the light flux in the presence of moving people by varying the brightness value according to pre-determined levels based on certain times:

1) when there is no motion, the fixtures will keep a certain level of light intensity for a specific period of time

2) when motion is detected in the monitoring area, the luminous flux will dim to 100% of light level

3) if no motion is detected after a certain period of time, the sensor will reset the light level to the pre-set value

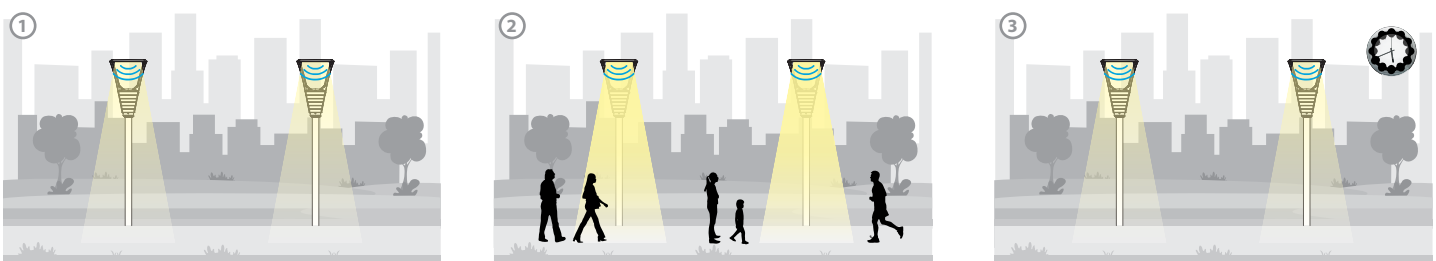

A lighting fixture equipped with a radar-type motion sensor may be affected by wind. Therefore, for particularly windy areas, PIR presence sensors are available upon request and for an additional cost.



PRODUCT CODE STRUCTURE

The product code of the Garda range consists of alphanumeric characters that indicate the product's technical features and is structured as follows:

standard code	equipment	current (I out)	optics type
330530	00	0500	CA

The type of optics is identified as follows:

CA: cycle-pedestrian asymmetric optic
SC: residential amenities+ cycle-pedestrian
AM: asymmetric medium beam optic
AW: asymmetric wide beam optic

ART.	VERSION	LUMINOUS FLUX MAINTENANCE	CODE	n LED	CRI	POWER SUPPLY	W tot	KELVIN	LUMEN OUTPUT (tq= 25 °C)
3351 Garda 2	asymmetric large areas	>100.000h (L80B10)	330520-00	16	70	500mA	**24**	4000K	3460lm
			330520-39					3000K	3270lm
			330521-00	32	70	530mA	**50**	4000K	7210lm
			330521-39					3000K	6810lm
			VERSIONS UPON REQUEST						
			330520-00-0330-AW	16	70	330mA	**15**	4000K	2320lm
			330520-39-0330-AW					3000K	2158lm
			330521-00-0330-AW	32	70	330mA	**30**	4000K	4560lm
			330521-39-0330-AW					3000K	4241lm
3352 Garda 3	cycle-pedestrian	>100.000h (L90B10)	330530-00	16	70	250mA	**11**	4000K	1790lm
			330530-39					3000K	1680lm
			330531-00	16	70	320mA	**15**	4000K	2280lm
			330531-39					3000K	2160lm
			VERSIONS UPON REQUEST						
			330530-00-0500-CA	16	70	500mA	**24**	4000K	3500lm
			330530-39-0500-CA					3000K	3255lm
			330531-00-0330-CA	32	70	330mA	**30**	4000K	4630lm
			330531-39-0330-CA					3000K	4306m
			330531-00-0530-CA	32	70	530mA	**50**	4000K	7300lm
			330531-39-0530-CA					3000K	6789lm
3353 Garda 4	residential amenities + cycle-pedestrian	>100.000h (L80B10)	330540-00	20	70	420mA	**25**	4000K	3520lm
			330540-39					3000K	3230lm
			330541-00	20	70	840mA	**52**	4000K	6660lm
			330541-39					3000K	6300lm
			VERSIONS UPON REQUEST						
			330540-00-0220-SC	20	70	220mA	**12**	4000K	1870lm
			330540-39-0220-SC					3000K	1739lm
			330540-00-0280-SC	20	70	280mA	**16**	4000K	2370lm
			330540-39-0280-SC					3000K	2204lm
			330540-00-0560-SC	20	70	560mA	**33**	4000K	4560lm
			330540-39-0560-SC					3000K	4241lm
3355 Garda 5	rotosymmetric	>100.000h (L90B10)	330550-00	24	70	600mA	**44**	4000K	5767lm
			330550-39					3000K	5363lm
3355 Garda 6	rotosymmetric	>100.000h (L90B10)	330551-00	24	70	600mA	**44**	4000K	5851lm
			330551-39					3000K	5441lm
3350 Garda 1	rotosymmetric	>100.000h (L90B10)	330512-00	32	70	270mA	**12**	4000K	1830lm
			330512-39					3000K	1730lm
			330518-00	32	70	340mA	**15**	4000K	2300lm
			330518-39					3000K	2165lm
			330510-00	32	70	520mA	**24**	4000K	3530lm
			330510-39					3000K	3330lm
			330517-00	32	70	680mA	**31**	4000K	4510lm
			330517-39					3000K	4264lm
			330511-00	32	70	500mA	**47**	4000K	6540lm
			330511-39					3000K	6190lm
3354 Garda 7	asymmetric medium beam	>100.000h (L90B10)	330532-00	16	70	270mA	**12**	4000K	1830lm
			330532-39					3000K	1730lm
			330533-00	16	70	340mA	**16**	4000K	2290lm
			330533-39					3000K	2170lm
			330534-00	32	70	260mA	**24**	4000K	3470lm
			330534-39					3000K	3280lm
			VERSIONS UPON REQUEST						
			330534-00-0340-AM	32	70	340mA	**31**	4000K	4450lm
			330534-39-0340-AM					3000K	4220lm
			330534-00-0530-AM	32	70	530mA	**50**	4000K	6920lm
			330534-39-0530-AM					3000K	6540lm

Luminous flux setup: this can be done by programming the drive current values requested when ordering/purchasing the fixture



GENERAL CHARACTERISTICS

Housing and frame: pressed in die-cast aluminium and designed with a very small surface exposed to wind. Cooling fins are integrated into the cover.

Optics: made of PMMA with high temperature resistance and UV rays.

Pole connection: suited for poles with a diameter 60 mm.

Diffuser: extra-clear tempered glass, 4 mm thick, resistant to thermal shocks and impacts (UNI-EN 12150-1: 2001).

Coating: the fully automated powder-coating cycle involves a polyester-based, salt-spray corrosion-resistant and UV-stabilised paint.

Upon request: protective coating recommended for marine environments within 5 km of the sea.

Standard supply: automatic temperature control inside the device with automatic resetting. With dedicated electronic device to protect the LED module.

Equipment: equipped with an air-circulation valve. Complete with waterproof connector for quick installation.

OTHER CHARACTERISTICS

SURGE

Electronic safety device to protect the LED module and the related ballast compliant with EN 61547. It works in two modes:
- differential mode: surge between power cables and between the phase and neutral.
- common mode: surge between power, L/N and ground cables or between the fixture's body if it is of class II and installed on a metal pole.

LOW FLICKER

Product with a very low flicker; uniform light for greater eye protection.



THE RANGE OF LOTO STREET LAMPS IS AVAILABLE IN THE FOLLOWING COLOUR TEMPERATURES:

2200K

2200K (subcode -73): lamps with warm amber light at a colour temperature of 2200K reduces the risks of an excessive exposure to harmful blue LED light and allows a "softer" impact on inhabited zones, especially in historic centres.

3000K 4000K

3000K - 4000K as standard: lamps with 3000K-4000K white light, instead, is the best choice for lighting up urban areas, streets, residential centres and generally all areas where this type of light guarantees greater safety and visual comfort.



CLD PROG

PROG (CLD PROG) AVAILABLE FUNCTIONS

Luminous flux setup	This can be done by programming the drive current values requested when ordering/purchasing the fixture
CLO (Constant Light Output)	The lighting fixture maintains a constant light output throughout its entire service life

LIGHTING POINT MANAGEMENT OPTIONS ON REQUEST
possibility to choose different lighting point management systems according to the system's needs:

1-10V dimming ordered with **sub-code -12**	Adjustment range from 10%-100% with 1-10V
Virtual Midnight order with **subcode -30**	Stand-alone system with automatic luminous flux reduction in **4 steps**. To increase energy savings at night when there are fewer people and vehicles around, a lighting fixture can be programmed according to a specific profile (customizable on request). The fixture reduces its luminous flux through a self-learning process which, depending on the previous switching on and off times, will determine a hypothetical "virtual midnight". This is the average value between the time the fixture is switched on (sunset) and switched off (sunrise). The "virtual midnight" is the reference point for dimming lights according to the desired profile. The device is integrated in the LED driver and therefore does not require any modification to the system. *In order for the system to function correctly, the system must be adjusted by a device that turns the system on and off on a regular basis every day.* ***ATTENTION:*** *original settings and time slots for the "virtual midnight" value can be customized in up to 5 steps upon request.*

Factory settings	
Time	**Flux**
on ÷ 22:00	100%
22:00 ÷ 23:30	75%
23:30 ÷ 02:30	50%
02:30 ÷ 04:00	75%
04:00 ÷ off	100%

PLC remote control ordered with **sub-code -0078**	Point-to-point and system management and diagnosis system

For more information see page XX-XXIII



Exemple with Zhaga Socket (subcode -0054)

LUMINAIRE DESIGNED FOR INSTALLATION ON NEMA OR ZHAGA SOCKET: to monitor and manage public lighting centrally, lighting fixtures will always be more equipped with wireless controls that will allow their integration with the IoT. Today the market offers two solutions: **NEMA and ZHAGA**. Both solutions offer an electrical and mechanical connection between the control antenna and the lighting fixture.

Nema Socket order with **subcode -40** (sealing cap to be ordered separately)	Mounted directly on the fixture's body, ideal for remote lighting management applications.
Zhaga Socket order with **subcode -0054** (complete with sealing cap)	



IP66 IK09

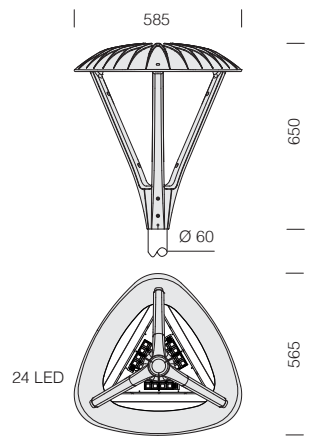

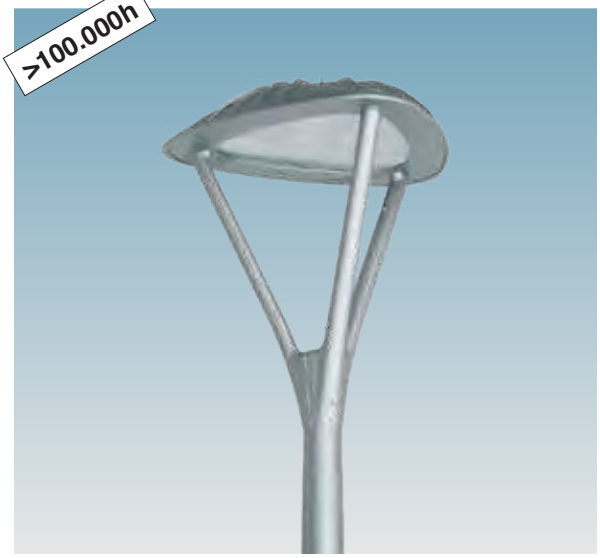

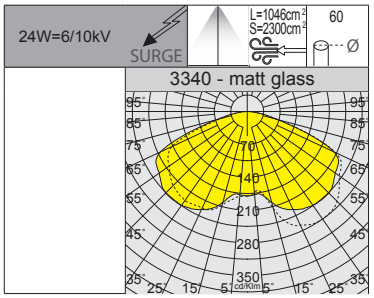

RG0 Ethr

+40 C° -30

U.V.

LOW FLICKER

LED: power factor ≥0.9.
Luminous flux maintenance 90%: >100.000h (L90B10).

3340 Loto 2 - wide beam - matt

		CLD PROG			LUMEN OUTPUT (tq= 25 °C)
LED	colour	weight	code	W tot	K - ølm 340mA - CRI
LED	grey	10.40	330214-00	**24**	4000K - 2900lm - CRI 70
	graphite		330215-00		
LED	grey	10.40	330214-39	**24**	3000K - 2755lm - CRI 70
	graphite		330215-39		

IP66 IK09

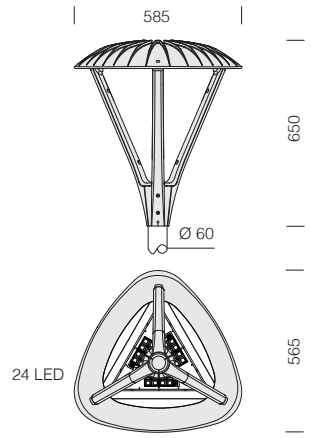



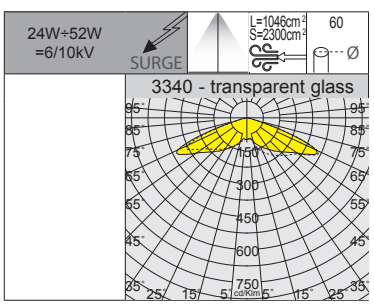

RG0 Ethr

+40 C° -30

U.V.

LOW FLICKER

3000K

4000K

LED: power factor ≥0.9.
Luminous flux maintenance 90%: >100.000h (L90B10).

3340 Loto 1 - wide beam

		CLD PROG			LUMEN OUTPUT (tq= 25 °C)
LED	colour	weight	code	W tot	K - ølm - CRI
LED	grey	10.40	330210-00	**24**	4000K - 3730lm - CRI 70
	graphite		330211-00		
LED	grey	10.40	330210-39	**24**	3000K - 3510lm - CRI 70
	graphite		330211-39		
LED	grey	10.40	330212-00	**52**	4000K - 7170lm - CRI 70
	graphite		330213-00		
LED	grey	10.40	330212-39	**52**	3000K - 6740lm - CRI 70
	graphite		330213-39		

Example	Power supply	n.LED	W tot	K	ølm
upon request	220mA	24	**15**	**4000K**	2420lm

n.LED	W tot	K	ølm
24	**15**	**3000K**	2270lm

Example	Power supply	n.LED	W tot	K	ølm
upon request	460mA	24	**33**	**4000K**	4910lm

n.LED	W tot	K	ølm
24	**33**	**3000K**	4620lm



RG0 Ethr

+40 C° -30

U.V.

LOW FLICKER

3000K

4000K

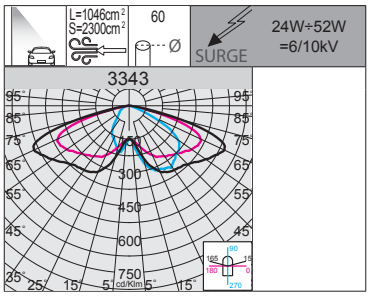



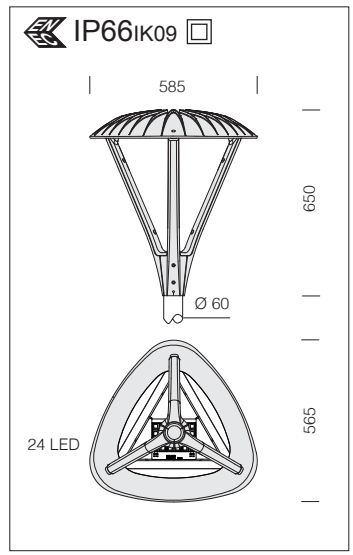

3343 Loto 4 - T3 asymmetric					
		CLD PROG			LUMEN OUTPUT (tq= 25 °C)
LED	colour	weight	code	W tot	K - ølm - CRI
LED	grey	10.40	330240-00	**24**	4000K - 3650lm - CRI 70
	graphite		330241-00		
LED	grey	10.40	330240-39	**24**	3000K - 3431lm - CRI 70
	graphite		330241-39		
LED	grey	10.40	330242-00	**52**	4000K - 7080lm - CRI 70
	graphite		330243-00		
LED	grey	10.40	330242-39	**52**	3000K - 6650lm - CRI 70
	graphite		330243-39		

LED: power factor ≥0.9.
Luminous flux maintenance 90%: >100.000h (L90B10).

Example	Power supply	n.LED	W tot	K	ølm
upon request	220mA	24	**15**	**4000K**	2400lm

n.LED	W tot	K	ølm
24	**15**	**3000K**	2260lm

Example	Power supply	n.LED	W tot	K	ølm
upon request	460mA	24	**33**	**4000K**	4880lm

n.LED	W tot	K	ølm
24	**33**	**3000K**	4590lm

IP66 IK09

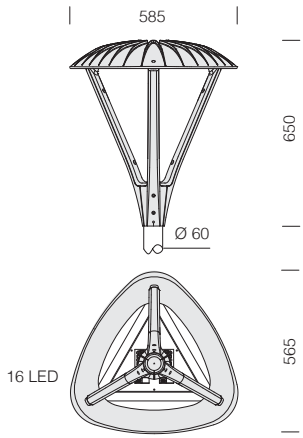

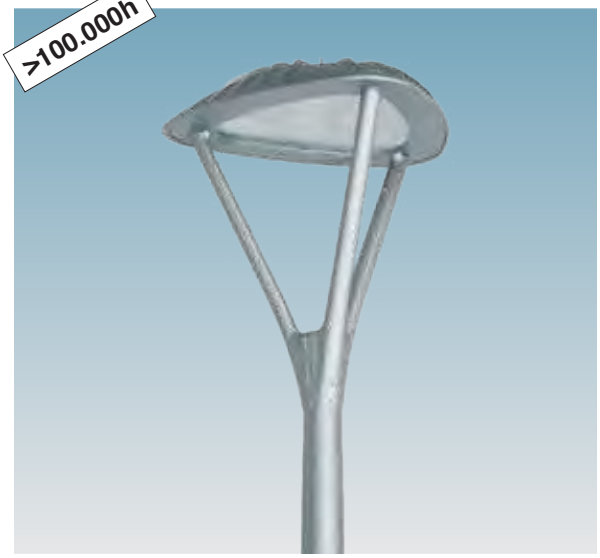

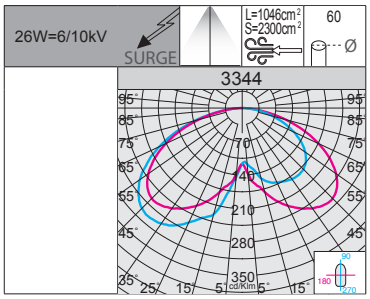

RG0 Ethr
+40 C° -30
U.V.
LOW FLICKER

LED: power factor ≥0.9.
Luminous flux maintenance 90%: >100.000h (L90B10).

3344 Loto 5 - wide beam

		CLD PROG			LUMEN OUTPUT (tq= 25 °C)
LED	colour	weight	code	W tot	K - ølm 530mA - CRI
LED	grey	10.40	330250-00	**26**	4000K - 2930lm - CRI 70
	graphite		330251-00		
LED	grey	10.40	330250-39	**26**	3000K - 2785lm - CRI 70
	graphite		330251-39		

Example	Power supply	n.LED	W tot	K	ølm
upon request	700mA	16	**35**	**4000K**	3868lm

n.LED	W tot	K	ølm
16	**35**	**3000K**	3675lm

IP66 IK09

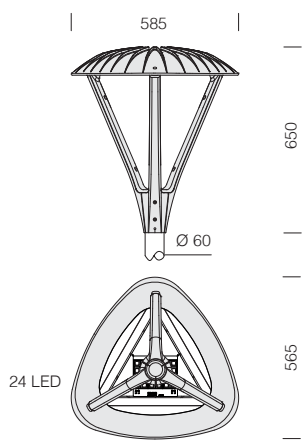



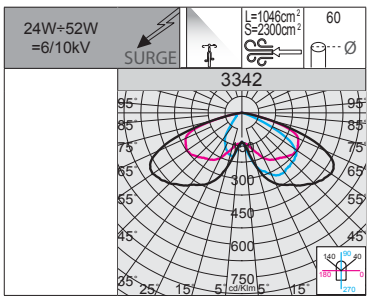

RG0 Ethr
+40 C° -30
U.V.
LOW FLICKER
3000K
4000K

LED: power factor ≥0.9.
Luminous flux maintenance 90%: >100.000h (L90B10).

3342 Loto 3 - T2 cycleways

		CLD PROG			LUMEN OUTPUT (tq= 25 °C)
LED	colour	weight	code	W tot	K - ølm - CRI
LED	grey	10.40	330230-00	**24**	4000K - 3650lm - CRI 70
	graphite		330231-00		
LED	grey	10.40	330230-39	**24**	3000K - 3431lm - CRI 70
	graphite		330231-39		
LED	grey	10.40	330232-00	**52**	4000K - 7080lm - CRI 70
	graphite		330233-00		
LED	grey	10.40	330232-39	**52**	3000K - 6650lm - CRI 70
	graphite		330233-39		

Example	Power supply	n.LED	W tot	K	ølm
upon request	220mA	24	**15**	**4000K**	2400lm

n.LED	W tot	K	ølm
24	**15**	**3000K**	2260lm

Example	Power supply	n.LED	W tot	K	ølm
upon request	460mA	24	**33**	**4000K**	4880lm

n.LED	W tot	K	ølm
24	**33**	**3000K**	4590lm



CCT SWITCH = with this integrated switch you can select the desired light colour, 2200K-2700K and 3000K-4000K.

POWER SWITCH = with this integrated switch you can select the fixture's total wattage, 15W-20W-25W-29W or 34W-42W-49W-59W.



The main feature of this fixture is the new colour-changing technology. With **two built-in switches** positioned on housing of the fixture, you can:

• select 4 different colour temperatures, adjusting to most installations:

2200K **2700K**

EWW = 2200K (extra warm white)

WW = 2700K (warm white)

3000K **4000K**

WW = 3000K (warm white)

NW = 4000K (neutral white)

• select the type of luminous flux with 4 output power ranges :

LOW	MEDIUM	HIGH
15W	20W - 25W	29W
34W	42W - 49W	59W



GENERAL CHARACTERISTICS

Housing/cover: made of die-cast aluminium.

Pole connection: pressed in die-cast aluminium. Suited for poles with a diameter 60 mm.

Diffuser: in transparent, vandal-resistant and V2 self-extinguishing polycarbonate, UV-stabilized.

Optics : made of PMMA with high temperature resistance and UV rays.

Coating: the fully automated powder-coating cycle involves a polyester-based, salt-spray corrosion-resistant and UV-stabilised paint.

Standard supply: dedicated electronic device to protect the LED module. Supplied with waterproof connector for quick installation and complete with an air-circulation valve; external screws and bolts in stainless steel. Supplied standard with double switch to choose the colour temperature between **2200K-2700K** and **3000K-4000K** and the type of lighting for up to 4 lighting levels

Cities aspire to be more liveable for residents and visitors by becoming increasingly more attentive to the quality of public lighting. To achieve this new form of urban decor in the best possible way, Disano presents different families of luminaires that can meet the needs of both big cities and small towns. Among these products, **BRAIES** holds a special place. Characterised by a high level of versatility, this innovative luminaire is designed for new urban routes, providing pedestrians and cyclists with more light and safety. The functional design also allows excellent distribution of the light flux and proper heat dissipation, lengthening the system's service life.

BRAIES IS THE IDEAL PRODUCT FOR THE LIGHTING OF PARKS AND RESIDENTIAL AREAS : in a single body frame, you have a fully equipped luminaire designed to meet any need, including the possibility to select the desired colour temperature in 4 power wattages, maintaining aesthetic continuity and differentiating the amount of light emitted. It is an excellent fixture for the lighting of parks and green areas, ideal for urban settings in which you need to achieve high energy savings and excellent light quality.

BRAIES is available as standard with a **2200K** and **2700K** colour temperature to reproduce a cosy ambient light associated with sunset. In this way, the artificial light becomes a less invasive element in the environment, **respecting the needs of the surrounding flora and fauna**.

Research has shown that different types of lighting can significantly impact nocturnal insects, birds and other creatures that play a vital role in local ecosystems. Environmental organisations are increasingly calling for this aspect to be properly considered in the design of new lighting systems. Modern LEDs, with a reduced blue light component, provide an opportunity to create less disruptive lighting in streets or parking areas near green spaces, while offering better protection for local wildlife.

2200K 2700K **2200K - 2700K:** lamps with warm light at a colour temperature of 2200K-2700K *reduces the risks of an excessive exposure to harmful blue LED light* and allows a "softer" impact on inhabited zones, especially in historic centres.







BRAIES come with colour temperatures of **3000K** and **4000K**. These versions are ideal for urban spaces such as public parks, squares, and historic town centres that require an illumination that enhance architectural features while ensuring pedestrian safety, visual comfort, and minimising light pollution

3000K 4000K **3000K - 4000K:** lamps with 3000K-4000K white light, instead, is the best choice for lighting up urban areas, streets, residential centres and generally all areas where this type of light guarantees greater safety and visual comfort.

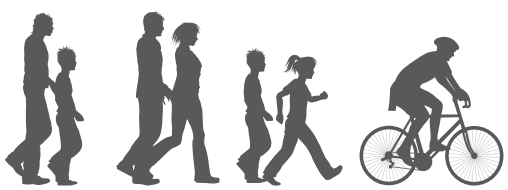





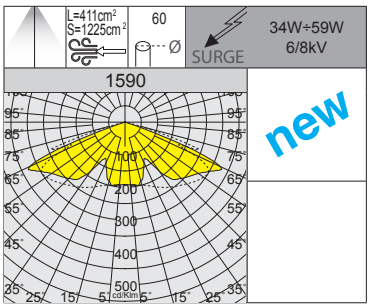

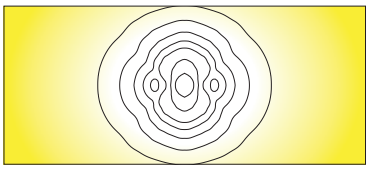



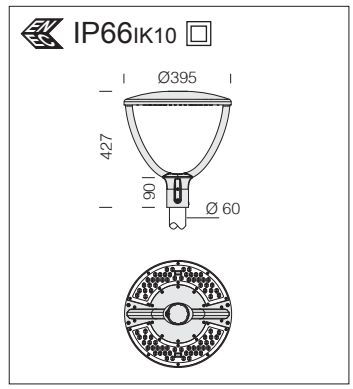

LED: power factor ≥0.9.
Luminous flux maintenance 80%: 100.000h (L80B20).

1590 Braies - CCT 2200K-2700K / POWER SWITCH - rotosymmetric

		CLD			LUMEN OUTPUT (tq= 25 °C)
LED	colour	weight	code	W tot	K - ølm - CRI
LED	RAL 7021	4.20	330509-00	**34**	2200K - **4948lm** - CRI>80
					2700K - **5108lm** - CRI>80
				42	2200K - **5937lm** - CRI>80
					2700K - **6128lm** - CRI>80
				49	2200K - **7210lm** - CRI>80
					2700K - **7442lm** - CRI>80
				59	2200K - **8482lm** - CRI>80
					2700K - **8755lm** - CRI>80

Ideal for lighting up historic town centres, residential areas, parks, and protected areas, **while respecting the needs of nocturnal flora and fauna**.

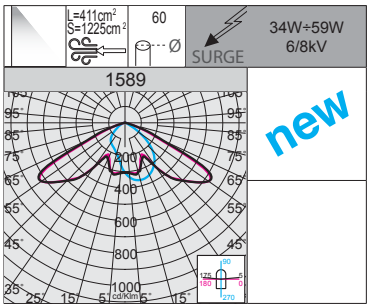

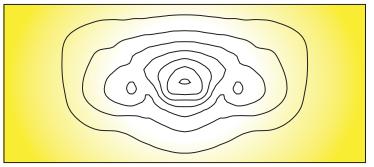



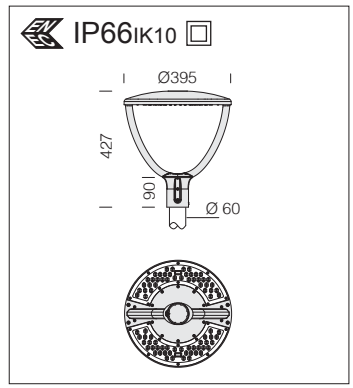

LED: power factor ≥0.9.
Luminous flux maintenance 80%: 100.000h (L80B20).

1589 Braies - CCT 2200K-2700K / POWER SWITCH - asymmetric

		CLD			LUMEN OUTPUT (tq= 25 °C)
LED	colour	weight	code	W tot	K - ølm - CRI
LED	RAL 7021	4.20	330508-00	**34**	2200K - **4948lm** - CRI>80
					2700K - **5108lm** - CRI>80
				42	2200K - **5937lm** - CRI>80
					2700K - **6128lm** - CRI>80
				49	2200K - **7210lm** - CRI>80
					2700K - **7442lm** - CRI>80
				59	2200K - **8482lm** - CRI>80
					2700K - **8755lm** - CRI>80

Ideal for lighting up historic town centres, residential areas, parks, and protected areas, **while respecting the needs of nocturnal flora and fauna**.

IP66IK10

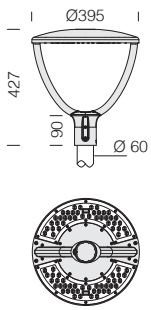

LED: power factor ≥0.9.
Luminous flux maintenance 80%: 100.000h (L80B20).



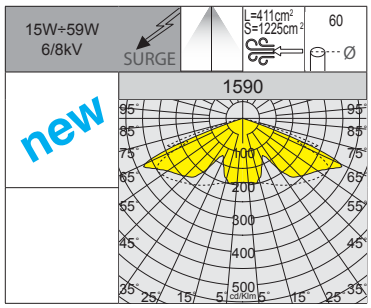

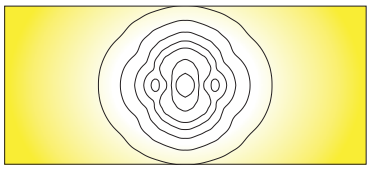

1590 Braies - CCT 3000K-4000K / POWER SWITCH - rotosymmetric

		CLD			LUMEN OUTPUT (tq= 25 °C)
LED	colour	weight	code	W tot	K - ølm - CRI
LED	RAL 7021	4.20	330500-00	15	4000K - **2400lm** - CRI>80
					3000K - **2280lm** - CRI>80
				20	4000K - **3360lm** - CRI>80
					3000K - **3192lm** - CRI>80
				25	4000K - **4000lm** - CRI>80
					3000K - **3800lm** - CRI>80
				29	4000K - **4800lm** - CRI>80
					3000K - **4560lm** - CRI>80
LED	RAL 7021	4.20	330500-00002431	34	4000K - **5600lm** - CRI>80
					3000K - **5320lm** - CRI>80
				42	4000K - **6720lm** - CRI>80
					3000K - **6384lm** - CRI>80
				49	4000K - **8160lm** - CRI>80
					3000K - **7752lm** - CRI>80
				59	4000K - **9600lm** - CRI>80
					3000K - **9120lm** - CRI>80

IP66IK10

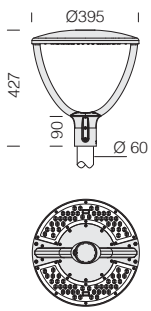

LED: power factor ≥0.9.
Luminous flux maintenance 80%: 100.000h (L80B20).



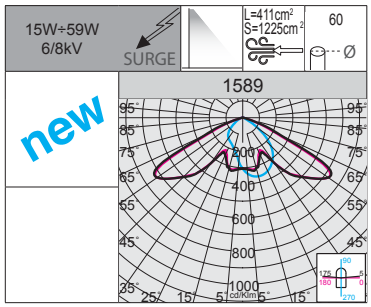

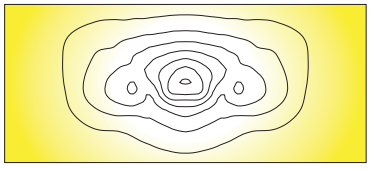

1589 Braies - CCT 3000K-4000K / POWER SWITCH - asymmetric

		CLD			LUMEN OUTPUT (tq= 25 °C)
LED	colour	weight	code	W tot	K - ølm - CRI
LED	RAL 7021	4.20	330505-00	15	4000K - **2400lm** - CRI>80
					3000K - **2280lm** - CRI>80
				20	4000K - **3360lm** - CRI>80
					3000K - **3192lm** - CRI>80
				25	4000K - **4000lm** - CRI>80
					3000K - **3800lm** - CRI>80
				29	4000K - **4800lm** - CRI>80
					3000K - **4560lm** - CRI>80
LED	RAL 7021	4.20	330506-00	34	4000K - **5600lm** - CRI>80
					3000K - **5320lm** - CRI>80
				42	4000K - **6720lm** - CRI>80
					3000K - **6384lm** - CRI>80
				49	4000K - **8160lm** - CRI>80
					3000K - **7752lm** - CRI>80
				59	4000K - **9600lm** - CRI>80
					3000K - **9120lm** - CRI>80



SPECIAL VERSIONS

Upon request: versions available in different colours and surface finishes to coordinate with any architectural design.



GREEN **RAL 6024**

WHITE **RAL 9003**

RED **RAL 3001**

BLUE **RAL 5005**

YELLOW **RAL 1021**

Installation sequence for side-mount/top mount pole connection applications.

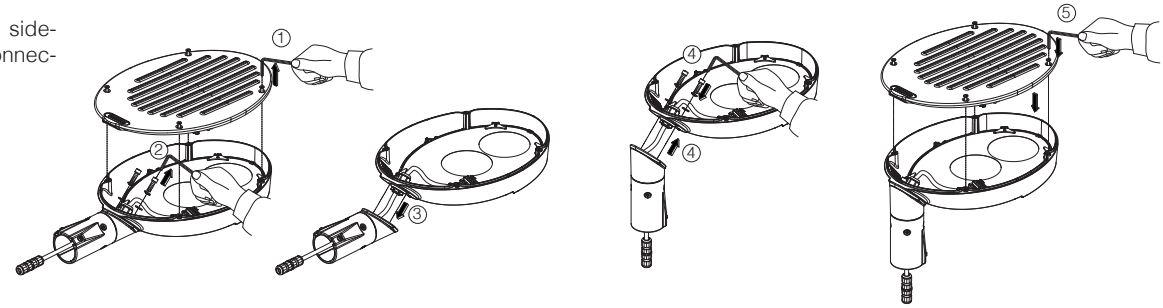

GENERAL CHARACTERISTICS

Housing and cover: in die-cast aluminium and designed with a very small surface exposed to wind. Cooling fins are integrated into the cover.

Pole connection: in die-cast aluminium; suited for poles with a diameter Ø60mm.

Diffuser: extra-clear, tempered glass, 4 mm thick, resistant to thermal shock and impacts (UNI-EN12150-1: 2001).

Coating: the fully automated powder-coating cycle involves a polyester-based, salt-spray corrosion-resistant and UV-stabilised paint.

Upon request: protective coating recommended for marine environments within 5 km of the sea.

Standard supply: automatic temperature control inside the device with automatic resetting; dedicated electronic device to protect the LED module; Complete with waterproof connector for quick installation and anti-condensation valve for air recirculation.

OTHER CHARACTERISTICS

SURGE

Electronic safety device to protect the LED module and the related ballast compliant with EN 61547.
It works in two modes:
- differential mode: surge between power cables and between the phase and neutral.
- common mode: surge between power, L/N and ground cables or between the fixture's body if it is of class II and installed on a metal pole.



Precision optics that allow broad design flexibility guaranteeing high levels of light quality.

Registered Design DM/100271

The International Bureau of the World Intellectual Property Organization (WIPO) hereby certifies that the particulars given below correspond to the recording made in the International Register of Industrial Designs.

THE RANGE OF TORPEDO 2.0 STREET LAMPS IS AVAILABLE IN THE FOLLOWING COLOUR TEMPERATURES:

2200K

2200K (subcode -73) upon request: lamps with warm amber light at a colour temperature of 2200K reduces the risks of an excessive exposure to harmful blue LED light and allows a "softer" impact on inhabited zones, especially in historic centres.

3000K 4000K

3000K - 4000K as standard: lamps with 3000K-4000K white light, instead, is the best choice for lighting up urban areas, streets, residential centres and generally all areas where this type of light guarantees greater safety and visual comfort.

Exemple with Zhaga Socket (subcode -0054)



LUMINAIRE DESIGNED FOR INSTALLATION ON NEMA OR ZHAGA SOCKET: to monitor and manage public lighting centrally, lighting fixtures will always be more equipped with wireless controls that will allow their integration with the IoT. Today the market offers two solutions: **NEMA and ZHAGA**. Both solutions offer an electrical and mechanical connection between the control antenna and the lighting fixture.

Nema Socket order with **subcode -40** (sealing cap to be ordered separately)	**Zhaga Socket** order with **subcode -0054** (complete with sealing cap)
Mounted directly on the fixture's body, ideal for remote lighting management applications.	

CLD PROG

PROG (CLD PROG) AVAILABLE FUNCTIONS

Luminous flux setup	This can be done by programming the drive current values requested when ordering/purchasing the fixture
CLO (Constant Light Output)	The lighting fixture maintains a constant light output throughout its entire service life

LIGHTING POINT MANAGEMENT OPTIONS ON REQUEST

possibility to choose different lighting point management systems according to the system's needs:

1-10V dimming ordered with **sub-code -12**	Adjustment range from 10%-100% with 1-10V
Virtual Midnight order with **subcode -30**	Stand-alone system with automatic luminous flux reduction in **4 steps**. To increase energy savings at night when there are fewer people and vehicles around, a lighting fixture can be programmed according to a specific profile (customizable on request). The fixture reduces its luminous flux through a self-learning process which, depending on the previous switching on and off times, will determine a hypothetical "virtual midnight". This is the average value between the time the fixture is switched on (sunset) and switched off (sunrise). The "virtual midnight" is the reference point for dimming lights according to the desired profile. The device is integrated in the LED driver and therefore does not require any modification to the system. *In order for the system to function correctly, the system must be adjusted by a device that turns the system on and off on a regular basis every day.* ***ATTENTION:*** *original settings and time slots for the "virtual midnight" value can be customized in up to 5 steps upon request.*

Factory settings	
Time	**Flux**
on ÷ 22:00	100%
22:00 ÷ 23:30	75%
23:30 ÷ 02:30	50%
02:30 ÷ 04:00	75%
04:00 ÷ off	100%

PLC remote control ordered with **sub-code -0078**	Point-to-point and system management and diagnosis system

For more information see page XX-XXIII

OTHER EXAMPLES OF IRTUAL MIDNIGHT CONFIGURATION

For example, in the central hours of the night, in areas where car and pedestrian traffic decreases significantly, a **reduction in luminous flux keeps the light within safety standards, while avoiding waste**. If we multiply this reduction by tens or hundreds of lamps, we get **significant savings**.

Virtual midnight in 2 steps subcode -35

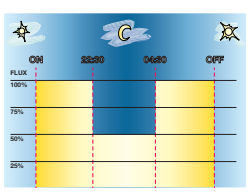

Settings upon request	
Time	**Flux**
on ÷ 22:30	100%
22:30 ÷ 04:30	50%
04:30 ÷ off	100%

Virtual midnight in 5 steps subcode -32

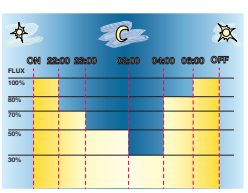

Settings upon request	
Time	**Flux**
on ÷ 22:00	100%
22:00 ÷ 23:00	70%
23:00 ÷ 02:00	50%
02:00 ÷ 04:00	30%
04:00 ÷ 06:00	80%
06:00 ÷ off	100%



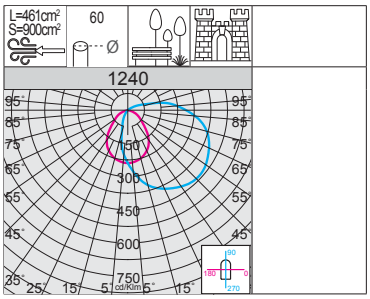

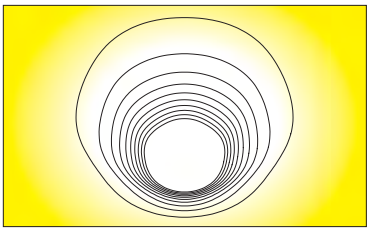



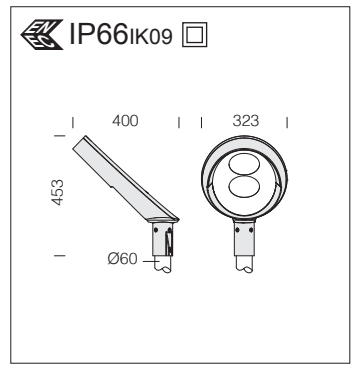

LED: power factor ≥0,92. Luminous flux maintenance:	
80%	90.000h (L80B10)
70%	100.000h (L70B50)

Optic: in pressed 99.95 aluminium with PVD treatment, anodically oxidized and polished.

1240 Torpedo 2.0 - 45° top-mount with matt glass - wide beam

		CLD			LUMEN OUTPUT (tq= 25 °C)
LED	colour	weight	code	W tot	K - ølm - CRI
COB	grey + RAL 7021	4.50	427810-00	25	4000K - 3182lm - CRI>80
			427810-39		3000K - 3022lm - CRI>80
			427811-00	51	4000K - 6364lm - CRI>80
			427811-39		3000K - 6046lm - CRI>80

IP66 IK09

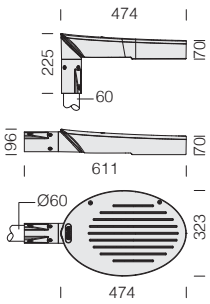

LED: power factor ≥0,92. Luminous flux maintenance:	
80%	90.000h (L80B10)
70%	100.000h (L70B50)

Optic: in pressed 99.95 aluminium with PVD treatment, anodically oxidized and polished.



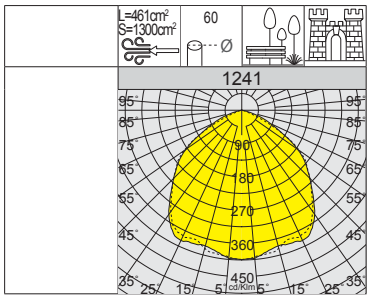

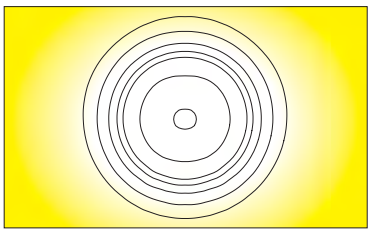

RG0 Ethr
+40 C° -30
U.V.
LOW FLICKER
3000K
4000K

1241 Torpedo 2.0 - wide beam

		CLD			LUMEN OUTPUT (tq= 25 °C)
LED	colour	weight	code	W tot	K - ølm - CRI
COB	grey + RAL 7021	4.50	427820-00	25	4000K - 3990lm - CRI>80
			427820-39		3000K - 3790lm - CRI>80
			427821-00	51	4000K - 7979lm - CRI>80
			427821-39		3000K - 7580lm - CRI>80

IP66 IK09

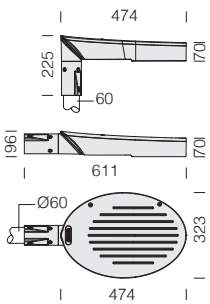

LED: power factor ≥0,92. Luminous flux maintenance:	
80%	90.000h (L80B10)
70%	100.000h (L70B50)

Optic: in pressed 99.95 aluminium with PVD treatment, anodically oxidized and polished.



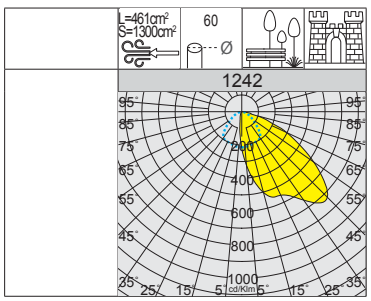

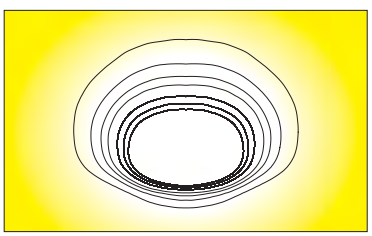

RG0 Ethr
+40 C° -30
U.V.
LOW FLICKER
3000K
4000K

1242 Torpedo 2.0 - asymmetric

		CLD			LUMEN OUTPUT (tq= 25 °C)
LED	colour	weight	code	W tot	K - ølm - CRI
COB	grey + RAL 7021	4.50	427830-00	25	4000K - 3723lm - CRI>80
			427830-39		3000K - 3537lm - CRI>80
			427831-00	51	4000K - 7445lm - CRI>80
			427831-39		3000K - 7073lm - CRI>80

RG0 Ethr
+40 C° -30
U.V.
LOW FLICKER
3000K
4000K

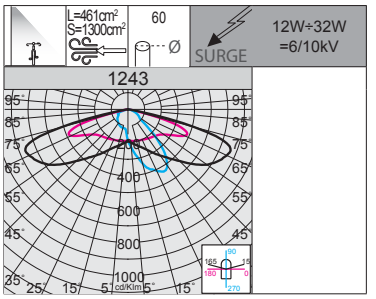

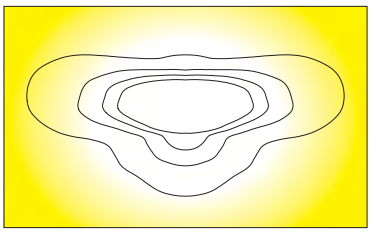

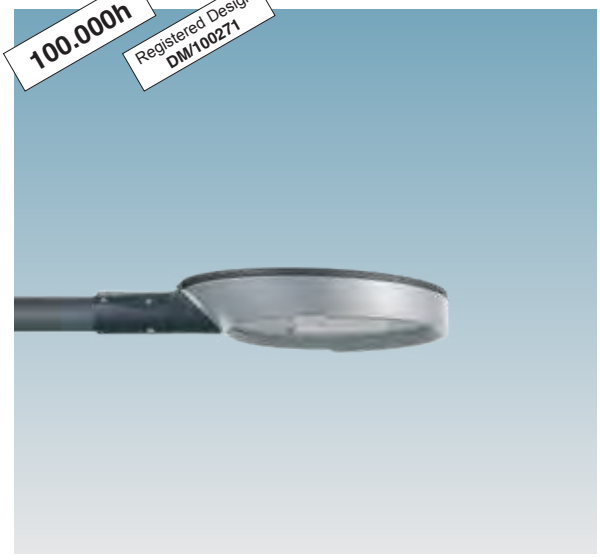

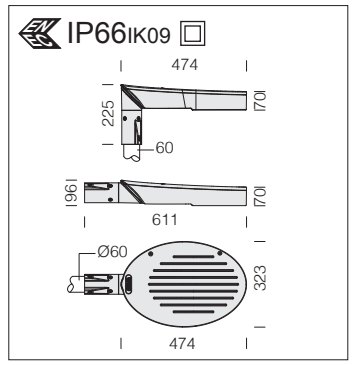

Optics: in PMMA, highly resistant to temperature and UV radiation.

LED: power factor ≥0.9.
Luminous flux maintenance 90%: 100.000h (L90B10).

1243 Torpedo 2.0 - cycleways

		CLD PROG			LUMEN OUTPUT (tq= 25 °C)
LED	colour	weight	code	W tot	K - ølm - CRI
LED	grey + RAL 7021	4.50	427840-00	12	4000K - 1903lm - CRI>70
			427840-39		3000K - 1808lm - CRI>70
			427841-00	22	4000K - 3438lm - CRI>70
			427841-39		3000K - 3266lm - CRI>70
			427842-00	32	4000K - 5077lm - CRI>70
			427842-39		3000K - 4823lm - CRI>70

RG0 Ethr
+40 C° -30
U.V.
LOW FLICKER
3000K
4000K

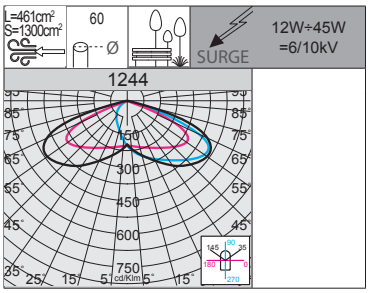

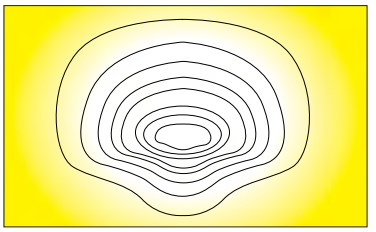



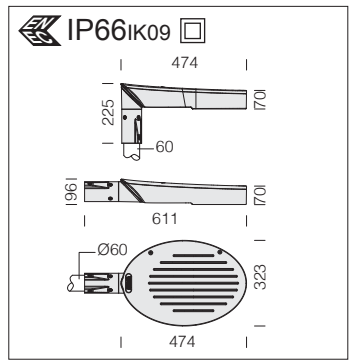

Optics: in PMMA, highly resistant to temperature and UV radiation.

LED: power factor ≥0.9.
Luminous flux maintenance 90%: 100.000h (L90B10).

1244 Torpedo 2.0 - asymmetric

		CLD PROG			LUMEN OUTPUT (tq= 25 °C)
LED	colour	weight	code	W tot	K - ølm - CRI
LED	grey + RAL 7021	4.50	427850-00	12	4000K - 1987lm - CRI>70
			427850-39		3000K - 1887lm - CRI>70
			427851-00	22	4000K - 3811lm - CRI>70
			427851-39		3000K - 3620lm - CRI>70
			427852-00	32	4000K - 5530lm - CRI>70
			427852-39		3000K - 5253lm - CRI>70
			427853-00	45	4000K - 7666lm - CRI>70
			427853-39		3000K - 7283lm - CRI>70

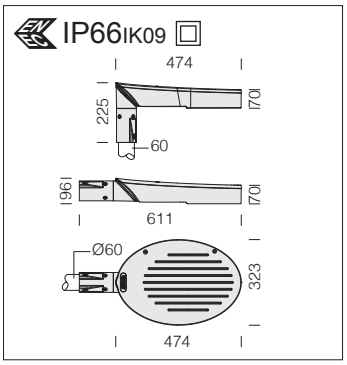

Optics: in PMMA, highly resistant to temperature and UV radiation.

LED: power factor ≥0.9.
Luminous flux maintenance 90%: 100.000h (L90B10).



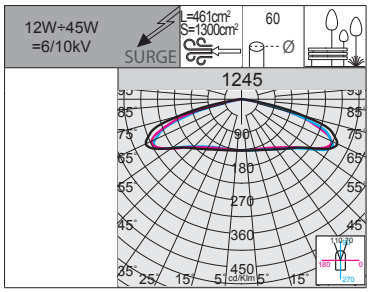

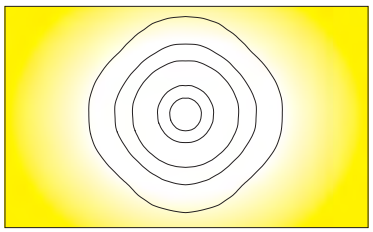

1245 Torpedo 2.0 - wide beam

		CLD PROG			LUMEN OUTPUT (tq= 25 °C)
LED	colour	weight	code	W tot	K - ølm - CRI
LED	grey + RAL 7021	4.50	427870-00	**12**	4000K - 1874lm - CRI>70
			427870-39		3000K - 1780lm - CRI>70
			427871-00	**22**	4000K - 3420lm - CRI>70
			427871-39		3000K - 3250lm - CRI>70
			427872-00	**32**	4000K - 4985lm - CRI>70
			427872-39		3000K - 4736lm - CRI>70
			427873-00	**45**	4000K - 6505lm - CRI>70
			427873-39		3000K - 6180lm - CRI>70

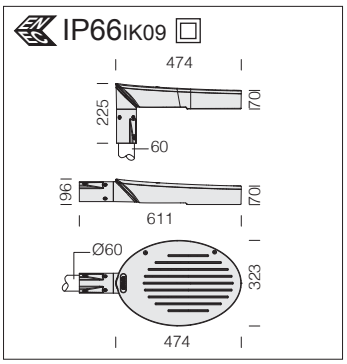

Optics: in aluminium coated with very high purity (99.99%) silver using physical vapour deposition (PVD).

LED: power factor ≥0.92.
Luminous flux maintenance 80%: 100.000h (L80B10).



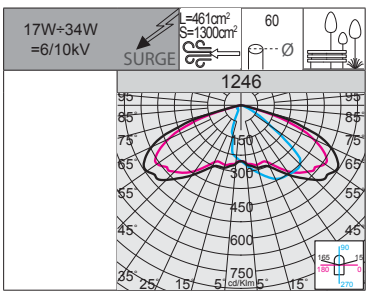

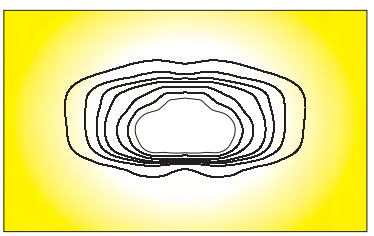

1246 Torpedo 2.0 - residential amenities

		CLD PROG			LUMEN OUTPUT (tq= 25 °C)
LED	colour	weight	code	W tot	K - ølm - CRI
LED	grey + RAL 7021	4.50	427867-00	**17**	4000K - 2793lm - CRI>70
			427867-39		3000K - 2653lm - CRI>70
			427868-00	**34**	4000K - 5586lm - CRI>70
			427868-39		3000K - 5307lm - CRI>70

Upon request available **Torpedo 2.0** with other photometric distributions:

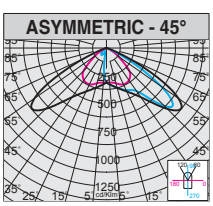

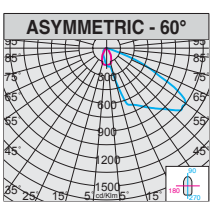

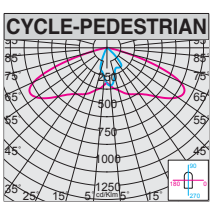

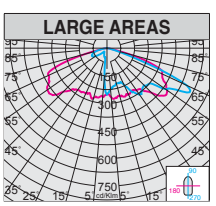

You can make your lighting system **SMART** by integrating sensors into the fixture so that it can detect the movement of people within a given detection area and automatically adjust light intensity according to previously established light levels and delay times. You will also achieve high **energy savings** without affecting the safety and visual comfort of pedestrians.

The lighting fixtures with **sub-code -1219 complete with motion sensors** are a functional lighting solution for public spaces. The ability to control the light flux without people moving in a space will let you **optimize operating costs**, while achieving notable **economic savings**. This lighting solution is best suited for public or private streets, cycle lanes, private roads, parks and, in general, for any installation where smart lighting control is required.

Energy savings

The ability of these fixtures to sense the presence of people transiting in a space through integrated motion sensors will significantly reduce the waste of light, especially at night, and achieve lower energy costs.

Safety

At night-time, the number of people using urban areas, such as parks, is quite low. Therefore, reducing the light flux using fixtures with integrated motion sensors is the ideal solution to always ensure adequate lighting levels.

Green lighting

Installing lighting fixtures with integrated motion sensors that will switch lights on only when people are around is the first step towards becoming a greener city, where spaces are more liveable and safer, without wasting energy and leaving a lesser impact on the environment.



Motion sensor - STAND-ALONE

Torpedo 2.0 with sub-code -1219: lighting fixture complete with stand-alone motion sensor with 0/10V control.

TECHNICAL SPECIFICATIONS	
Frequency	5.8GHz±75MHz
Stand-by power	≤1W
Setting	telecomando
Hold time (adjustable)	5s / 30s / 1min / 3min / 5min / 10min / 20min / 30min
Ambient light (adjustable)	2lux / 10lux /30lux / 50lux / OFF
Stand-by time (adjustable)	0s / 10s / 30s / 1min / 5min / 10min / 30min /+ ∞
Stand-by dimming level (adjustable)	20% / 30% / 50%
Detection area	50% - 75% - 100%
Detection angle	30° - 150°
Technology	Microwave



Remote control cod. **81418618** (to be purchased separately) that **allows changing the parameters even after installation is complete** and without the need to directly access the fixture.



DEFAULT SETTINGS

The fixtures is supplied as standard with the following parameters

Hold time	5s
Ambient light	OFF
Stand-by time	0s
Stand-by dimming level	10%
Detection area	100%

NOTE: when placing your order, it is possible upon request a customized configuration that you need to set.

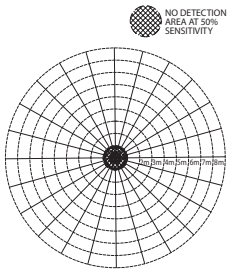

* DETECTION AREA

*** specifications for each detection area** (varies depending on the available versions) can be requested at our customer service.

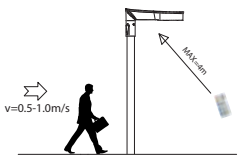

TYPICAL DETECTION AREA AT INSTALLATION HEIGHT 4-6m

A) Detection area: the sensor will turn the lights on when it detects motion in this area; with a 100% detection area the sensitivity level is high.

B) Hold time: the period of time during which lights stay on at full brightness after a person or object has left the detection area.

C) Ambient light: when the level of light inside a room is below a pre-determined threshold, the sensor will trigger the lights on; when set to 'disable', the sensor will operate whenever it detects movement regardless of the amount of light in the room.

D) Stand-by time: refers to the time the sensor keeps the lights at a dim level after the hold time.

E) Stand-by dimming level: is the lights' dimming level during the stand-by time.

EXAMPLE OF OPERATION

The lighting fixtures with **sub-code -1219** complete with motion sensors will adjust the light flux in the presence of moving people by varying the brightness value according to pre-determined levels based on certain times:

1) when there is no motion, the fixtures will keep a certain level of light intensity for a specific period of time

2) when motion is detected in the monitoring area, the luminous flux will dim to 100% of light level

3) if no motion is detected after a certain period of time, the sensor will reset the light level to the pre-set value

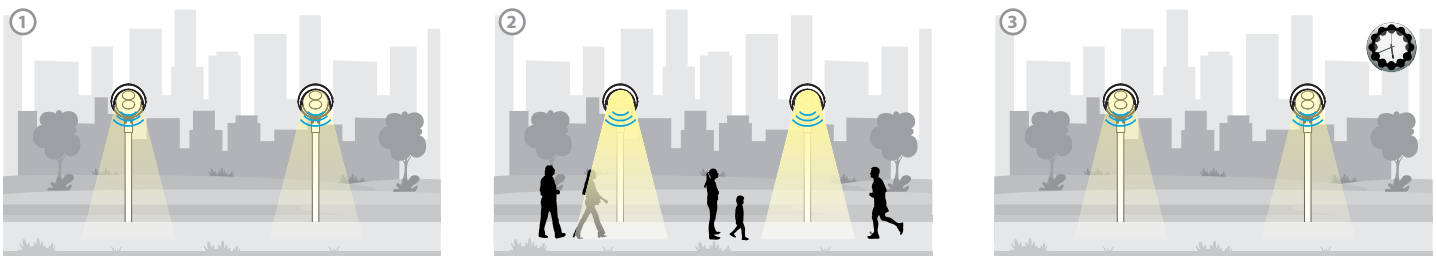

A lighting fixture equipped with a radar-type motion sensor may be affected by wind. Therefore, for particularly windy areas, PIR presence sensors are available upon request and for an additional cost.



SPECIAL VERSIONS

Upon request: versions available in different colours and surface finishes to coordinate with any architectural design.

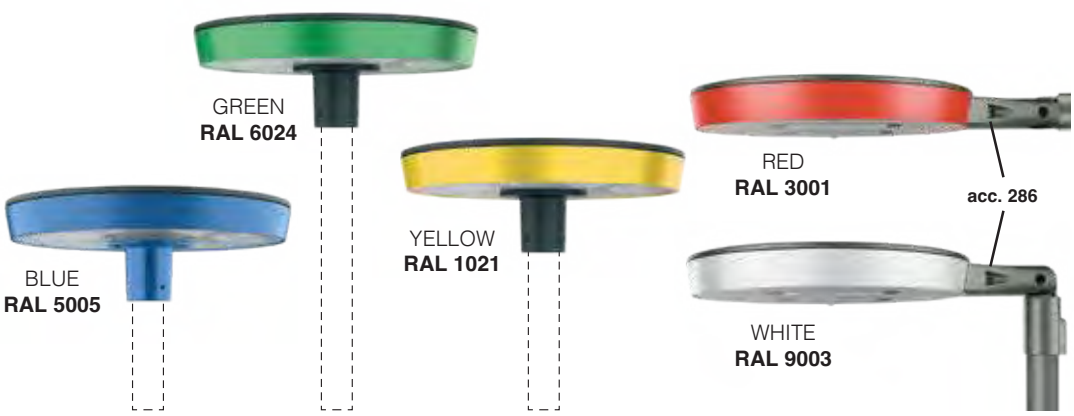

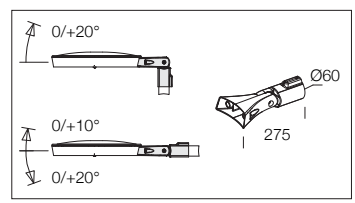

acc. 286 adjustable arm	
graphite	991445-00
In die-cast aluminium. For for Ø60mm side-mount applications.	

GENERAL CHARACTERISTICS

Housing: pressed in die-cast aluminium with fastening clamp for application of the arms.

Pole connection: version with pole connector incorporated directly into the fixture's housing to enable whip-type installation on poles with diameters Ø60mm.

Diffuser: art. 3336 polycarbonate 2,5 mm thick and art. 3337-3338 tempered glass, 4 mm thick, thermal shock and impact resistant (UNI-EN 12150-1 : 2001).

Optics: made of PMMA with high temperature resistance and UV rays.

Coating: the fully automated powder-coating cycle involves a polyester-based, salt-spray corrosion-resistant and UV-stabilised paint.

Upon request: protective coating recommended for marine environments within 5 km of the sea.

Standard supply: automatic temperature control inside the device with automatic resetting; dedicated electronic device to protect the LED module; Complete with waterproof connector for quick installation and anti-condensation valve for air recirculation.

OTHER CHARACTERISTICS

SURGE

Electronic safety device to protect the LED module and the related ballast compliant with EN 61547.
It works in two modes:
- differential mode: surge between power cables and between the phase and neutral.
- common mode: surge between power, L/N and ground cables or between the fixture's body if it is of class II and installed on a metal pole.

Registered Design **DM/100271** The International Bureau of the World Intellectual Property Organization (WIPO) hereby certifies that the particulars given below correspond to the recording made in the International Register of Industrial Designs.



Precision optics that allow broad design flexibility guaranteeing high levels of light quality.

THE RANGE OF VISCONTI 2.0 STREET LAMPS IS AVAILABLE IN THE FOLLOWING COLOUR TEMPERATURES:

2200K **2200K (subcode -73):** lamps with warm amber light at a colour temperature of 2200K reduces the risks of an excessive exposure to harmful blue LED light and allows a "softer" impact on inhabited zones, especially in historic centres.

3000K 4000K **3000K - 4000K as standard:** lamps with 3000K-4000K white light, instead, is the best choice for lighting up urban areas, streets, residential centres and generally all areas where this type of light guarantees greater safety and visual comfort.

Exemple with Zhaga Socket (subcode -0054)



LUMINAIRE DESIGNED FOR INSTALLATION ON NEMA OR ZHAGA SOCKET: to monitor and manage public lighting centrally, lighting fixtures will always be more equipped with wireless controls that will allow their integration with the IoT. Today the market offers two solutions: **NEMA and ZHAGA**. Both solutions offer an electrical and mechanical connection between the control antenna and the lighting fixture.

Nema Socket order with **subcode -40** (sealing cap to be ordered separately)	**Zhaga Socket** order with **subcode -0054** (complete with sealing cap)
Mounted directly on the fixture's body, ideal for remote lighting management applications.	

CLD PROG

PROG (CLD PROG) AVAILABLE FUNCTIONS

Luminous flux setup	This can be done by programming the drive current values requested when ordering/purchasing the fixture
CLO (Constant Light Output)	The lighting fixture maintains a constant light output throughout its entire service life

LIGHTING POINT MANAGEMENT OPTIONS ON REQUEST

possibility to choose different lighting point management systems according to the system's needs:

1-10V dimming ordered with **sub-code -12**	Adjustment range from 10%-100% with 1-10V
Virtual Midnight order with **subcode -30**	Stand-alone system with automatic luminous flux reduction in **4 steps**. To increase energy savings at night when there are fewer people and vehicles around, a lighting fixture can be programmed according to a specific profile (customizable on request). The fixture reduces its luminous flux through a self-learning process which, depending on the previous switching on and off times, will determine a hypothetical "virtual midnight". This is the average value between the time the fixture is switched on (sunset) and switched off (sunrise). The "virtual midnight" is the reference point for dimming lights according to the desired profile. The device is integrated in the LED driver and therefore does not require any modification to the system. *In order for the system to function correctly, the system must be adjusted by a device that turns the system on and off on a regular basis every day.* ***ATTENTION:*** *original settings and time slots for the "virtual midnight" value can be customized in up to 5 steps upon request.*

Factory settings	
Time	**Flux**
on ÷ 22:00	100%
22:00 ÷ 23:30	75%
23:30 ÷ 02:30	50%
02:30 ÷ 04:00	75%
04:00 ÷ off	100%

PLC remote control ordered with **sub-code -0078**	Point-to-point and system management and diagnosis system
For more information see page XX-XXIII	

OTHER EXAMPLES OF IRTUAL MIDNIGHT CONFIGURATION

For example, in the central hours of the night, in areas where car and pedestrian traffic decreases significantly, a **reduction in luminous flux keeps the light within safety standards, while avoiding waste**. If we multiply this reduction by tens or hundreds of lamps, we get **significant savings**.

Virtual midnight in 2 steps subcode -35

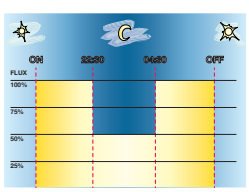

Settings upon request	
Time	**Flux**
on ÷ 22:30	100%
22:30 ÷ 04:30	50%
04:30 ÷ off	100%

Virtual midnight in 5 steps subcode -32

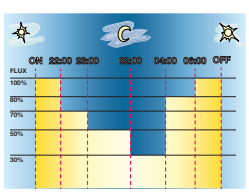

Settings upon request	
Time	**Flux**
on ÷ 22:00	100%
22:00 ÷ 23:00	70%
23:00 ÷ 02:00	50%
02:00 ÷ 04:00	30%
04:00 ÷ 06:00	80%
06:00 ÷ off	100%

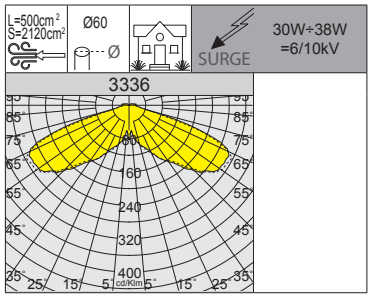

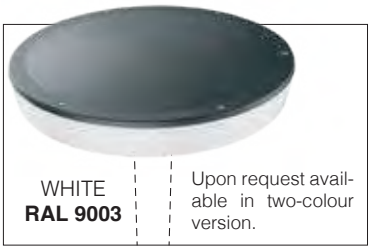

WHITE
RAL 9003

Upon request available in two-colour version.



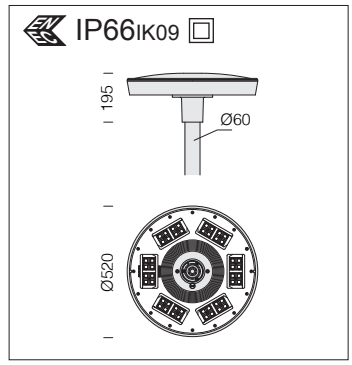

LED: power factor ≥0.9.
Luminous flux maintenance 90%: 100.000h (L90B10).

3336 Visconti 2.0 - rotosymmetric

		CLD PROG			LUMEN OUTPUT (tq= 25 °C)
LED	colour	weight	code	W tot	K - ølm - CRI
LED	graphite	7.20	328200-00	**30**	4000K - 4770lm - CRI 70
			328200-39		3000K - 4510lm - CRI 70
LED	graphite	7.20	328201-00	**38**	4000K - 6030lm - CRI 70
			328201-39		3000K - 5710lm - CRI 70

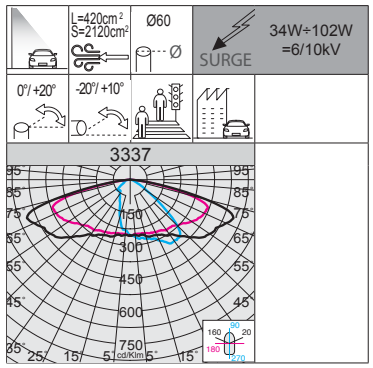

2200K - AMBER (sub-code -73)	
W tot	**LUMEN OUTPUT (tq= 25 °C)**
34	2200K - 4712lm
68	2200K - 9171lm
102	2200K - 14135lm



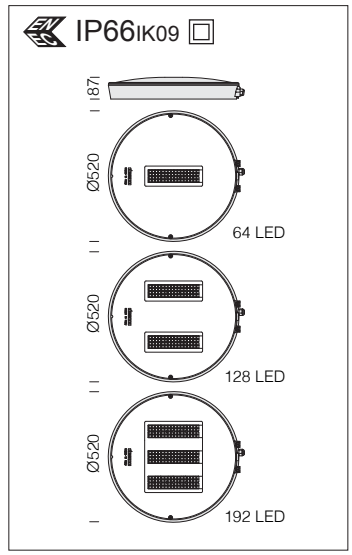

LED: power factor ≥0.9.
Luminous flux maintenance 90%: 100.000h (L90B10).

3337 Visconti 2.0 - residential amenities ME

		CLD PROG			LUMEN OUTPUT (tq= 25 °C)
LED	colour	weight	code	W tot	K - ølm 700mA - CRI
LED	graphite	8.30	328210-00	**34**	4000K - 5354lm - CRI 75
			328210-39		3000K - 5086lm - CRI 75
LED	graphite	8.30	328211-00	**68**	4000K - 10422lm - CRI 75
			328211-39		3000K - 9900lm - CRI 75
LED	graphite	8.30	328212-00	**102**	4000K - 16062lm - CRI 75
			328212-39		3000K - 15259lm - CRI 75

Example	Power supply	n.LED	W tot	K	ølm
upon request	350mA	64	**16**	**4000K**	2838lm
		128	**32**		5526lm
		192	**48**		8514lm
upon request	530mA	64	**25**	**4000K**	4177lm
		128	**50**		8130lm
		192	**75**		12531m

n.LED	W tot	K	ølm
64	**16**	**3000K**	2700lm
128	**32**		5250lm
192	**48**		8088lm
64	**25**	**3000K**	3970lm
128	**50**		7723lm
192	**75**		11905lm

IP66 IK09

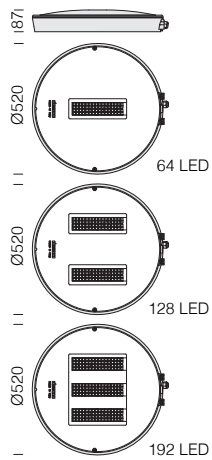

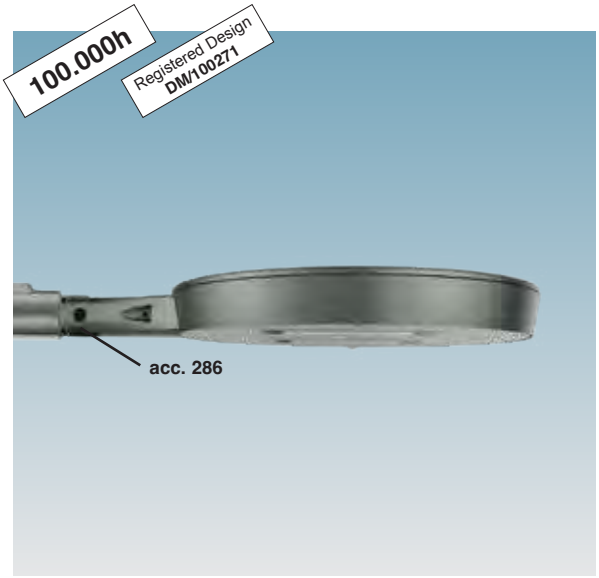

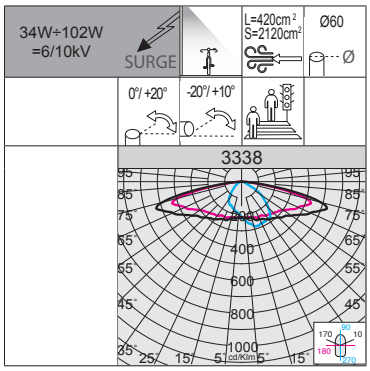

2200K - AMBER (sub-code -73)	
W tot	**LUMEN OUTPUT (tq= 25 °C)**
34	2200K - 4594lm
68	2200K - 8908lm
102	2200K - 13693lm

LED: power factor ≥0.9.
Luminous flux maintenance 90%: 100.000h (L90B10).

3338 Visconti 2.0 - cycleways

		CLD PROG			LUMEN OUTPUT (tq= 25 °C)
LED	colour	weight	code	W tot	K - ølm 700mA - CRI
LED	graphite	8.30	328240-00	**34**	4000K - 5220lm - CRI 75
			328240-39		3000K - 4960lm - CRI 75
LED	graphite	8.30	328241-00	**68**	4000K - 10123lm - CRI 75
			328241-39		3000K - 9617lm - CRI 75
LED	graphite	8.30	328242-00	**102**	4000K - 15560lm - CRI 75
			328242-39		3000K - 14877lm - CRI 75

Example	Power supply	n.LED	W tot	K	ølm
upon request	350mA	64	**16**	**4000K**	2768lm
		128	**32**		5367lm
		192	**48**		8304lm
upon request	530mA	64	**25**	**4000K**	4072lm
		128	**50**		7897lm
		192	**75**		12216lm

n.LED	W tot	K	ølm
64	**16**	**3000K**	2630lm
128	**32**		5100lm
192	**48**		7889lm
64	**25**	**3000K**	3869lm
128	**50**		7502lm
192	**75**		11607lm

IP66 IK09

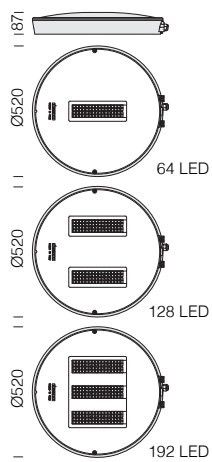



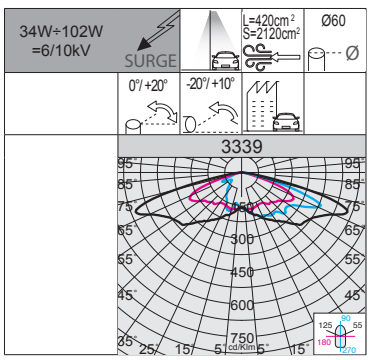

2200K - AMBER (sub-code -73)	
W tot	**LUMEN OUTPUT (tq= 25 °C)**
34	2200K - 4542lm
68	2200K - 8992lm
102	2200K - 13628lm

LED: power factor ≥0.9.
Luminous flux maintenance 90%: 100.000h (L90B10).

3339 Visconti 2.0 - large areas

		CLD PROG			LUMEN OUTPUT (tq= 25 °C)
LED	colour	weight	code	W tot	K - ølm 700mA - CRI
LED	graphite	8.30	328250-00	**34**	4000K - 5162lm - CRI 75
			328250-39		3000K - 4905lm - CRI 75
LED	graphite	8.30	328251-00	**68**	4000K - 10220lm - CRI 75
			328251-39		3000K - 9709lm - CRI 75
LED	graphite	8.30	328252-00	**102**	4000K - 15486lm - CRI 75
			328252-39		3000K - 14715lm - CRI 75

Example	Power supply	n.LED	W tot	K	ølm
upon request	350mA	64	**16**	**4000K**	2737lm
		128	**32**		5418lm
		192	**48**		8211lm
upon request	530mA	64	**25**	**4000K**	4030lm
		128	**50**		7212lm
		192	**75**		12090lm

n.LED	W tot	K	ølm
64	**16**	**3000K**	2600lm
128	**32**		5150lm
192	**48**		7800lm
64	**25**	**3000K**	3828lm
128	**50**		6852lm
192	**75**		11484lm



Examples of configurations with the Visconti lamp with central connection.

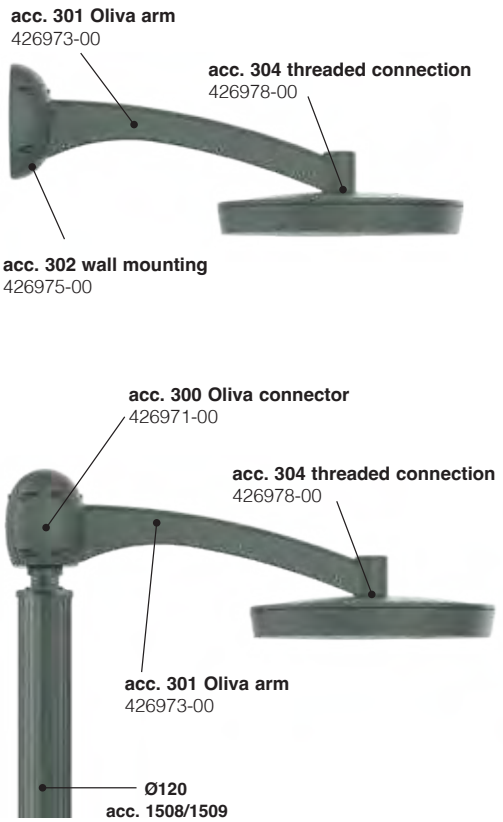

RG0 Ethr

+50 C° -30

U.V.

LOW FLICKER

3000K

4000K

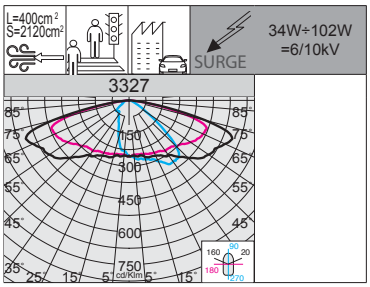

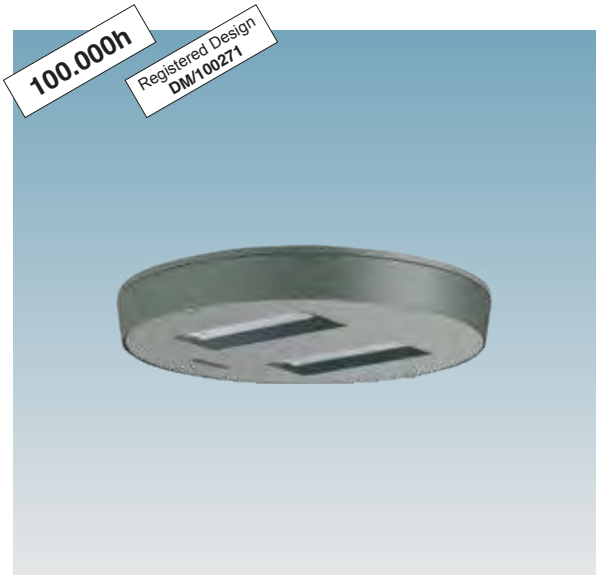

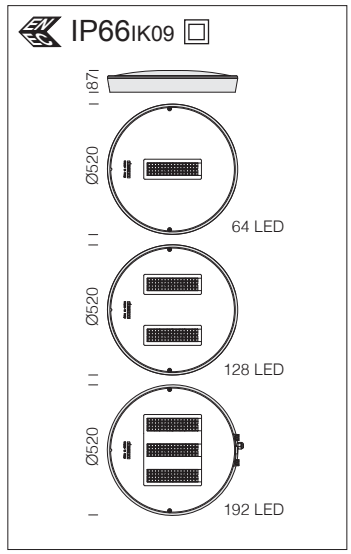

2200K - AMBER (sub-code -73)	
W tot	LUMEN OUTPUT (tq= 25 °C)
34	2200K - 4712lm
68	2200K - 9171lm
102	2200K - 14135lm

3327 Visconti 2.0 - residential amenities ME

		CLD PROG			LUMEN OUTPUT (tq= 25 °C)
LED	colour	weight	code	W tot	K - ølm 700mA - CRI
LED	graphite	8.30	328270-00	**34**	4000K - 5354lm - CRI 75
			328270-39		3000K - 5086lm - CRI 75
LED	graphite	8.30	328271-00	**68**	4000K - 10422lm - CRI 75
			328271-39		3000K - 9900lm - CRI 75
LED	graphite	8.30	328272-00	**102**	4000K - 16062lm - CRI 75
			328272-39		3000K - 15259lm - CRI 75

Example	Power supply	n.LED	W tot	K	ølm
upon request	350mA	64	**16**	**4000K**	2838lm
		128	**32**		5526lm
		192	**48**		8514lm
upon request	530mA	64	**25**	**4000K**	4177lm
		128	**50**		8130lm
		192	**75**		12531lm

n.LED	W tot	K	ølm
64	**16**	**3000K**	2700lm
128	**32**		5250lm
192	**48**		8088lm
64	**25**	**3000K**	3970lm
128	**50**		7723lm
192	**75**		11905lm

LED: power factor ≥0.9. Luminous flux maintenance 90%: 100.000h (L90B10).

IP66 IK09

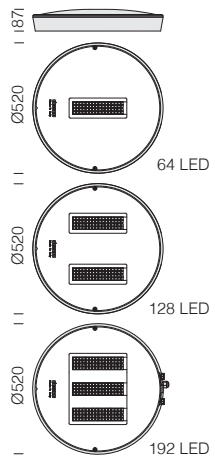



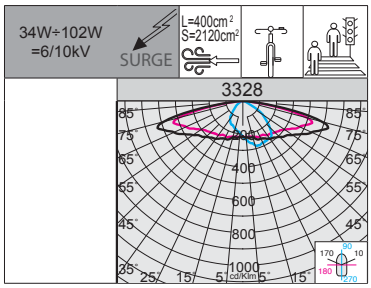

RG0 Ethr

+50 C° -30

U.V.

LOW FLICKER

3000K

4000K

2200K - AMBER (sub-code -73)	
W tot	**LUMEN OUTPUT (tq= 25 °C)**
34	2200K - 4594lm
68	2200K - 8908lm
102	2200K - 13693lm

LED: power factor ≥0.9.
Luminous flux maintenance 90%: 100.000h (L90B10).

3328 Visconti 2.0 - cycleways

		CLD PROG			LUMEN OUTPUT (tq= 25 °C)
LED	colour	weight	code	W tot	K - ølm 700mA - CRI
LED	graphite	8.30	328280-00	**34**	4000K - 5220lm - CRI 75
			328280-39		3000K - 4960lm - CRI 75
LED	graphite	8.30	328281-00	**68**	4000K - 10123lm - CRI 75
			328281-39		3000K - 9617lm - CRI 75
LED	graphite	8.30	328282-00	**102**	4000K - 15560lm - CRI 75
			328282-39		3000K - 14877lm - CRI 75

Example	Power supply	n.LED	W tot	K	ølm
upon request	350mA	64	**16**	**4000K**	2768lm
		128	**32**		5367lm
		192	**48**		8304lm
upon request	530mA	64	**25**	**4000K**	4072lm
		128	**50**		7897lm
		192	**75**		12216lm

n.LED	W tot	K	ølm
64	**16**	**3000K**	2630lm
128	**32**		5100lm
192	**48**		7889lm
64	**25**	**3000K**	3869lm
128	**50**		7502lm
192	**75**		11607lm

IP66 IK09

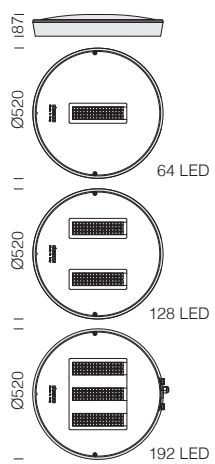



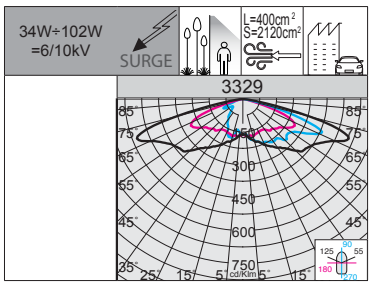

RG0 Ethr

+50 C° -30

U.V.

LOW FLICKER

3000K

4000K

2200K - AMBER (sub-code -73)	
W tot	**LUMEN OUTPUT (tq= 25 °C)**
34	2200K - 4542lm
68	2200K - 8992lm
102	2200K - 13628lm

LED: power factor ≥0.9.
Luminous flux maintenance 90%: 100.000h (L90B10).

3329 Visconti 2.0 - large areas

		CLD PROG			LUMEN OUTPUT (tq= 25 °C)
LED	colour	weight	code	W tot	K - ølm 700mA - CRI
LED	graphite	8.30	328290-00	**34**	4000K - 5162lm - CRI 75
			328290-39		3000K - 4905lm - CRI 75
LED	graphite	8.30	328291-00	**68**	4000K - 10220lm - CRI 75
			328291-39		3000K - 9709lm - CRI 75
LED	graphite	8.30	328292-00	**102**	4000K - 15486lm - CRI 75
			328292-39		3000K - 14715lm - CRI 75

Example	Power supply	n.LED	W tot	K	ølm
upon request	350mA	64	**16**	**4000K**	2737lm
		128	**32**		5418lm
		192	**48**		8211lm
upon request	530mA	64	**25**	**4000K**	4030lm
		128	**50**		7212lm
		192	**75**		12090lm

n.LED	W tot	K	ølm
64	**16**	**3000K**	2600lm
128	**32**		5150lm
192	**48**		7800lm
64	**25**	**3000K**	3828lm
128	**50**		6852lm
192	**75**		11484lm

You can make your lighting system **SMART** by integrating sensors into the fixture so that it can detect the movement of people within a given detection area and automatically adjust light intensity according to previously established light levels and delay times. You will also achieve high **energy savings** without affecting the safety and visual comfort of pedestrians.

The lighting fixtures with **sub-code -1219 complete with motion sensors** are a functional lighting solution for public spaces. The ability to control the light flux without people moving in a space will let you **optimize operating costs**, while achieving notable **economic savings**. This lighting solution is best suited for public or private streets, cycle lanes, private roads, parks and, in general, for any installation where smart lighting control is required.

Energy savings

The ability of these fixtures to sense the presence of people transiting in a space through integrated motion sensors will significantly reduce the waste of light, especially at night, and achieve lower energy costs.

Safety

At night-time, the number of people using urban areas, such as parks, is quite low. Therefore, reducing the light flux using fixtures with integrated motion sensors is the ideal solution to always ensure adequate lighting levels.

Green lighting

Installing lighting fixtures with integrated motion sensors that will switch lights on only when people are around is the first step towards becoming a greener city, where spaces are more liveable and safer, without wasting energy and leaving a lesser impact on the environment.



Motion sensor - STAND-ALONE

Visconti 2.0 with sub-code -1219: lighting fixture complete with stand-alone motion sensor with 0/10V control.

TECHNICAL SPECIFICATIONS	
Frequency	5.8GHz±75MHz
Stand-by power	≤1W
Setting	telecomando
Hold time (adjustable)	5s / 30s / 1min / 3min / 5min / 10min / 20min / 30min
Ambient light (adjustable)	2lux / 10lux /30lux / 50lux / OFF
Stand-by time (adjustable)	0s / 10s / 30s / 1min / 5min / 10min / 30min /+ ∞
Stand-by dimming level (adjustable)	20% / 30% / 50%
Detection area	50% - 75% - 100%
Detection angle	30° - 150°
Technology	Microwave



Remote control cod. **81418618** (to be purchased separately) that **allows changing the parameters even after installation is complete** and without the need to directly access the fixture.

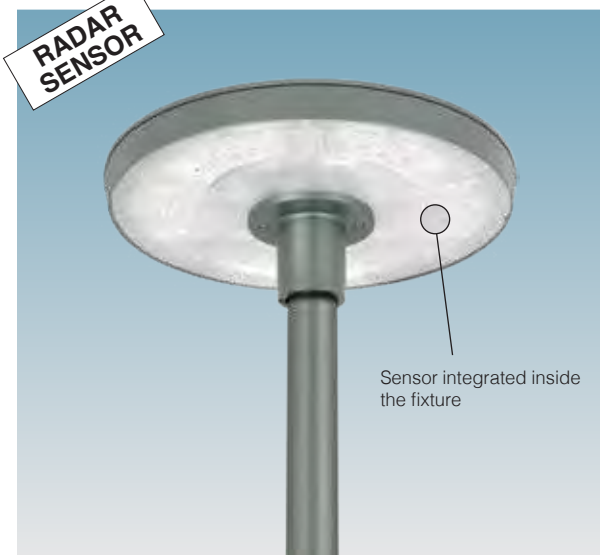

DEFAULT SETTINGS

The fixtures is supplied as standard with the following parameters

Hold time	5s
Ambient light	OFF
Stand-by time	0s
Stand-by dimming level	10%
Detection area	100%

NOTE: when placing your order, it is possible upon request a customized configuration that you need to set.

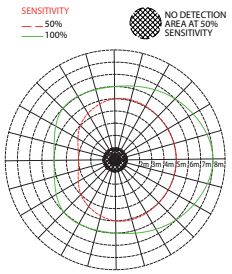

* DETECTION AREA

*** example of detection area** (varies depending on the available versions). For further information, please contact our customer service.

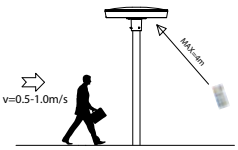

TYPICAL DETECTION AREA AT INSTALLATION HEIGHT 4-6m

A) Detection area: the sensor will turn the lights on when it detects motion in this area; with a 100% detection area the sensitivity level is high.

B) Hold time: the period of time during which lights stay on at full brightness after a person or object has left the detection area.

C) Ambient light: when the level of light inside a room is below a pre-determined threshold, the sensor will trigger the lights on; when set to 'disable', the sensor will operate whenever it detects movement regardless of the amount of light in the room.

D) Stand-by time: refers to the time the sensor keeps the lights at a dim level after the hold time.

E) Stand-by dimming level: is the lights' dimming level during the stand-by time.

EXAMPLE OF OPERATION

The lighting fixtures with **sub-code -1219** complete with motion sensors will adjust the light flux in the presence of moving people by varying the brightness value according to pre-determined levels based on certain times:

1) when there is no motion, the fixtures will keep a certain level of light intensity for a specific period of time

2) when motion is detected in the monitoring area, the luminous flux will dim to 100% of light level

3) if no motion is detected after a certain period of time, the sensor will reset the light level to the pre-set value

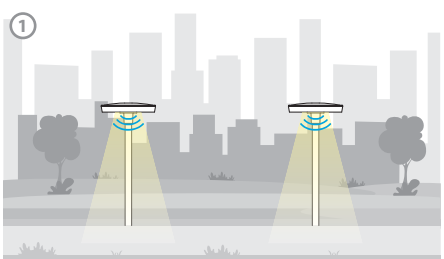

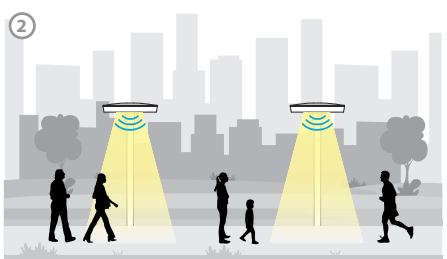

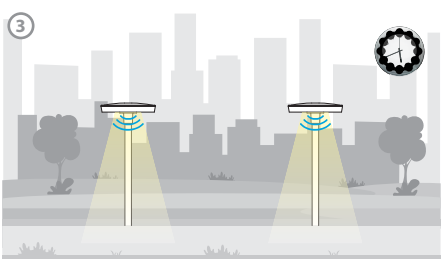

A lighting fixture equipped with a radar-type motion sensor may be affected by wind. Therefore, for particularly windy areas, PIR presence sensors are available upon request and for an additional cost.



GENERAL CHARACTERISTICS

Housing and frame: pressed in die-cast aluminium and designed with a very small surface exposed to wind. Cooling fins are integrated into the cover.

Pole connection: pressed in die-cast aluminium. Suited for poles with a diameter 60 mm.

Diffuser: extra-clear tempered glass, 4 mm thick, resistant to thermal shocks and impacts (UNI-EN 12150-1: 2001).

Coating: the fully automated powder-coating cycle involves a polyester-based, salt-spray corrosion-resistant and UV-stabilised paint.

Upon request: protective coating recommended for marine environments within 5 km of the sea.

Standard supply: dedicated electronic device to protect the LED module. Supplied with waterproof connector for quick installation and complete with an air-circulation valve

OTHER CHARACTERISTICS

SURGE

Electronic safety device to protect the LED module and the related ballast compliant with EN 61547. It works in two modes:
- differential mode: surge between power cables and between the phase and neutral.
- common mode: surge between power, L/N and ground cables or between the fixture's body if it is of class II and installed on a metal pole.

LOW FLICKER

Product with a very low flicker; uniform light for greater eye protection.

Available in:
- two-colour version (RAL 7021 - graphite)
- pearl colour
- blue colour



THE RANGE OF VOLO STREET LAMPS IS AVAILABLE IN THE FOLLOWING COLOUR TEMPERATURES:

3000K 4000K

3000K - 4000K as standard: lamps with 3000K-4000K white light, instead, is the best choice for lighting up urban areas, streets, residential centres and generally all areas where this type of light guarantees greater safety and visual comfort.
Upon request LED 4000K - CRI 80 versions with **sub-code -60.**



CLD PROG

PROG (CLD PROG) AVAILABLE FUNCTIONS

Luminous flux setup	This can be done by programming the drive current values requested when ordering/purchasing the fixture
CLO (Constant Light Output)	The lighting fixture maintains a constant light output throughout its entire service life

LIGHTING POINT MANAGEMENT OPTIONS ON REQUEST

possibility to choose different lighting point management systems according to the system's needs:

1-10V dimming ordered with **sub-code -12**	Adjustment range from 10%-100% with 1-10V
Virtual Midnight order with **subcode -30**	Stand-alone system with automatic luminous flux reduction in **4 steps**. To increase energy savings at night when there are fewer people and vehicles around, a lighting fixture can be programmed according to a specific profile (customizable on request). The fixture reduces its luminous flux through a self-learning process which, depending on the previous switching on and off times, will determine a hypothetical "virtual midnight". This is the average value between the time the fixture is switched on (sunset) and switched off (sunrise). The "virtual midnight" is the reference point for dimming lights according to the desired profile. The device is integrated in the LED driver and therefore does not require any modification to the system. *In order for the system to function correctly, the system must be adjusted by a device that turns the system on and off on a regular basis every day.* ***ATTENTION:** original settings and time slots for the "virtual midnight" value can be customized in up to 5 steps upon request.*
PLC remote control ordered with **sub-code -0078**	Point-to-point and system management and diagnosis system

Factory settings

Time	Flux
on ÷ 22:00	100%
22:00 ÷ 23:30	75%
23:30 ÷ 02:30	50%
02:30 ÷ 04:00	75%
04:00 ÷ off	100%

For more information see page XX-XXIII



Exemple with Zhaga Socket (subcode -0054)

LUMINAIRE DESIGNED FOR INSTALLATION ON NEMA OR ZHAGA SOCKET: to monitor and manage public lighting centrally, lighting fixtures will always be more equipped with wireless controls that will allow their integration with the IoT. Today the market offers two solutions: **NEMA and ZHAGA**. Both solutions offer an electrical and mechanical connection between the control antenna and the lighting fixture.

Nema Socket order with **subcode -40** (sealing cap to be ordered separately)	Mounted directly on the fixture's body, ideal for remote lighting management applications.
Zhaga Socket order with **subcode -0054** (complete with sealing cap)	

RG0 Ethr | +40 C° -30 | U.V. | LOW FLICKER | 3000K | 4000K

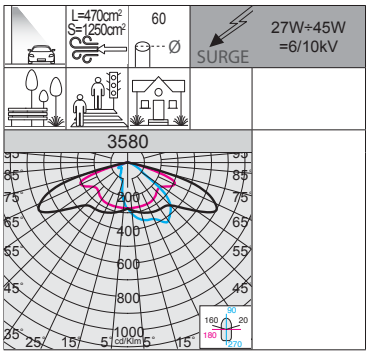



IP66 IK09

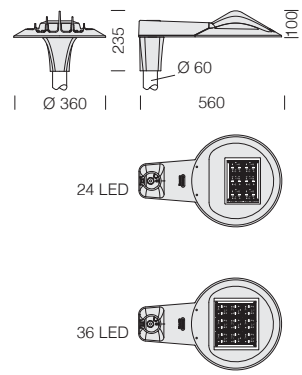

Upon request (sub-code -60)	
LED	CRI 80

3580 Volo - residential amenities - HIGH PERFORMANCE

		CLD PROG			LUMEN OUTPUT (tq= 25 °C)
LED	colour	weight	code	W tot	K - ølm - CRI
LED	graphite	5.50	424600-2168	**27**	4000K - 4563lm - CRI 70
			424600-3968		3000K - 4334lm - CRI 70
LED	graphite	5.50	424602-2168	**45**	4000K - 7782lm - CRI 70
			424602-3968		3000K - 7393lm - CRI 70

Optique : made of PMMA with high temperature resistance and UV rays.

LED: power factor ≥0.9.
Luminous flux maintenance 90%: >100.000h (L90B10).

RG0 Ethr | +40 C° -30 | U.V. | LOW FLICKER | 3000K | 4000K

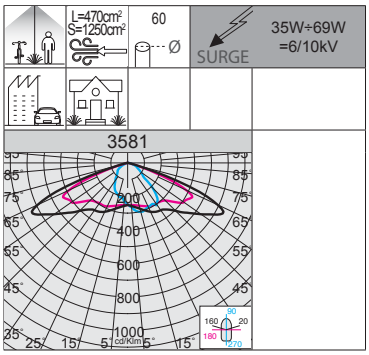



IP66 IK09

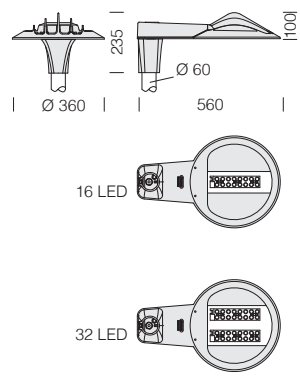

Upon request (sub-code -60)	
LED	CRI 80

3581 Volo - cycleways + residential amenities

		CLD PROG			LUMEN OUTPUT (tq= 25 °C)
LED	colour	weight	code	W tot	K - ølm - CRI
LED	pearl	5.50	424610-00	**35**	4000K - 4631lm - CRI 70
LED	graphite	5.50	424610-2168	**35**	4000K - 4631lm - CRI 70
			424610-3968		3000K - 4400lm - CRI 70
LED	blue	5.50	424611-00	**35**	4000K - 4631lm - CRI 70
			424611-39		3000K - 4400lm - CRI 70
LED	graphite	5.50	424612-2168	**69**	4000K - 9418lm - CRI 70
			424612-3968		3000K - 8947lm - CRI 70
LED	blue	5.50	424613-00	**69**	4000K - 9418lm - CRI 70
			424613-39		3000K - 8947lm - CRI 70

Optique : made of PMMA with high temperature resistance and UV rays.

LED: power factor ≥0.9.
Luminous flux maintenance 90%: >100.000h (L90B10).

IP66 IK09

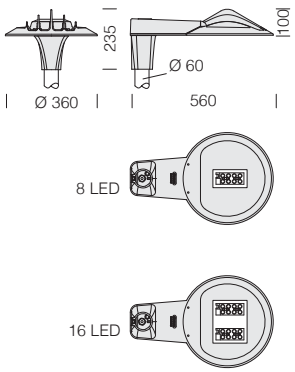

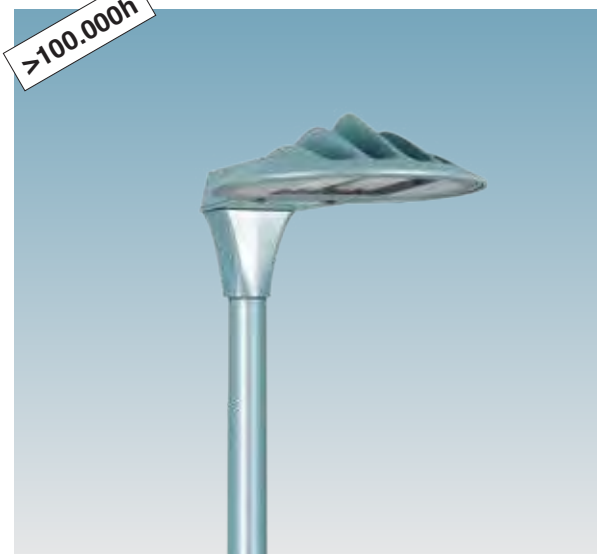

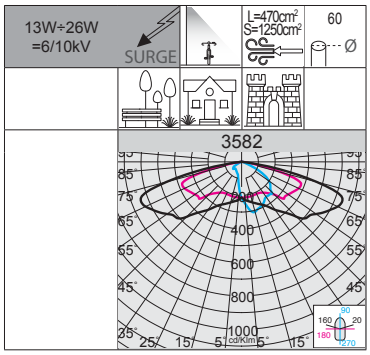

Upon request (sub-code -60)	
LED	CRI 80

Optique : made of PMMA with high temperature resistance and UV rays.

LED: power factor ≥0.9.
Luminous flux maintenance 90%: >100.000h (L90B10).

3582 Volo - cycleways

		CLD PROG			LUMEN OUTPUT (tq= 25 °C)
LED	colour	weight	code	W tot	K - ølm - CRI
LED	graphite	5.50	424620-2168	**13**	4000K - 1939lm - CRI 70
			424620-3968		3000K - 1842lm - CRI 70
LED	blue	5.50	424621-00	**13**	4000K - 1939lm - CRI 70
LED	graphite	5.50	424622-2168	**26**	4000K - 3768lm - CRI 70
			424622-3968		3000K - 3580lm - CRI 70
LED	blue	5.50	424623-00	**26**	4000K - 3768lm - CRI 70

IP66 IK09

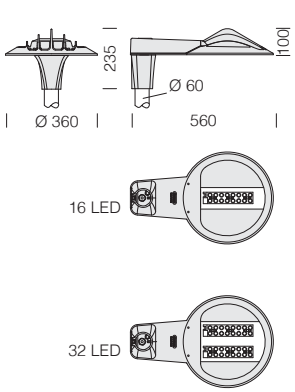



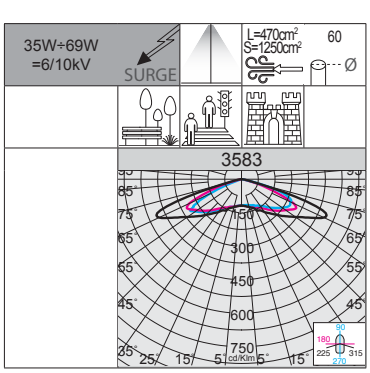

Upon request (sub-code -60)	
LED	CRI 80

Optique : made of PMMA with high temperature resistance and UV rays.

LED: power factor ≥0.9.
Luminous flux maintenance 90%: >100.000h (L90B10).

3583 Volo - symmetric

		CLD PROG			LUMEN OUTPUT (tq= 25 °C)
LED	colour	weight	code	W tot	K - ølm - CRI
LED	pearl	5.50	424630-39	**35**	3000K - 4250lm - CRI 70
LED	graphite	5.50	424630-2168	**35**	4000K - 4474lm - CRI 70
			424630-3968		3000K - 4250lm - CRI 70
LED	blue	5.50	424631-00	**35**	4000K - 4474lm - CRI 70
LED	pearl	5.50	424632-00	**69**	4000K - 9150lm - CRI 70
LED	graphite	5.50	424632-2168	**69**	4000K - 9150lm - CRI 70
			424632-3968		3000K - 8693lm - CRI 70
LED	blue	5.50	424633-00	**69**	4000K - 9150lm - CRI 70



IP66IK09

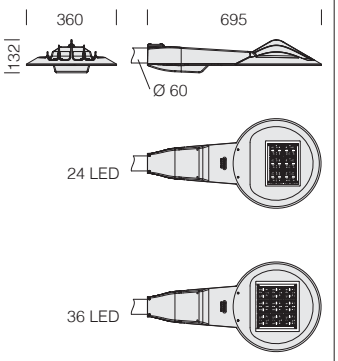

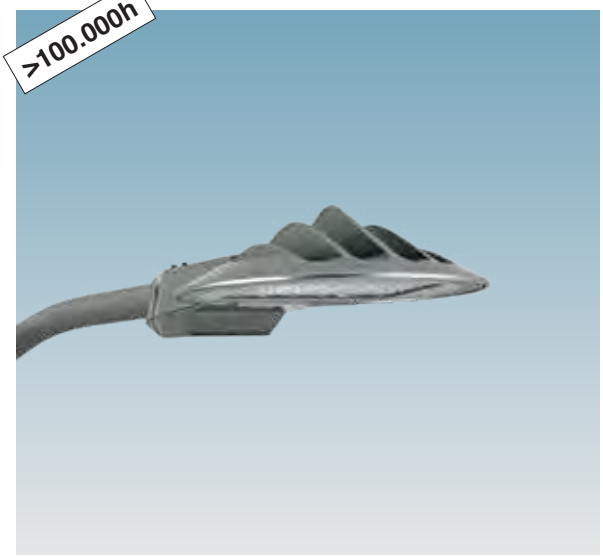

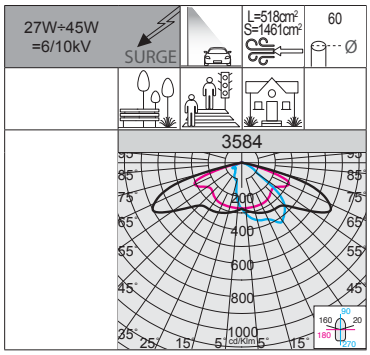

Upon request (sub-code -60)	
LED	CRI 80

Optique : made of PMMA with high temperature resistance and UV rays.
LED: power factor ≥0.9.
Luminous flux maintenance 90%: >100.000h (L90B10).

3584 Volo - residential amenities - HIGH PERFORMANCE

		CLD PROG			LUMEN OUTPUT (tq= 25 °C)
LED	colour	weight	code	W tot	K - ølm - CRI
LED	graphite	5.50	424640-00	**27**	4000K - 4563lm - CRI 70
			424640-39		3000K - 4335lm - CRI 70
LED	graphite	5.50	424641-00	**45**	4000K - 7782lm - CRI 70
			424641-39		3000K - 7393lm - CRI 70

IP66IK09

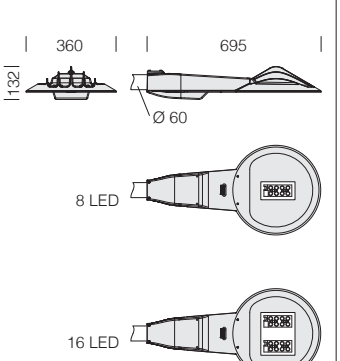

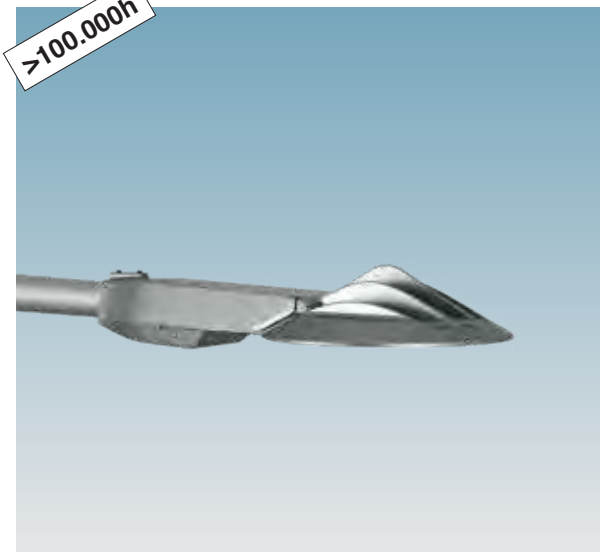

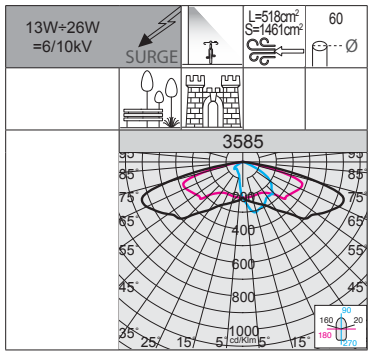

Upon request (sub-code -60)	
LED	CRI 80

Optique : made of PMMA with high temperature resistance and UV rays.
LED: power factor ≥0.9.
Luminous flux maintenance 90%: >100.000h (L90B10).

3585 Volo - cycleways

		CLD PROG			LUMEN OUTPUT (tq= 25 °C)
LED	colour	weight	code	W tot	K - ølm - CRI
LED	graphite	5.50	424650-00	**13**	4000K - 1939lm - CRI 70
			424650-39		3000K - 1842lm - CRI 70
LED	graphite	5.50	424651-00	**26**	4000K - 3768lm - CRI 70
			424651-39		3000K - 3580lm - CRI 70



CCT SWITCH = with this integrated switch you can select the desired light colour, 2700K-3000K-4000K y 1800K-2200K.

POWER SWITCH = with this integrated switch you can select the fixture's total wattage, 25W-45W-60W.



The main feature of this fixture is the new colour-changing technology. With **two built-in switches** positioned on housing of the fixture, you can:

• select 5 different colour temperatures, adjusting to most installations:

1800K **2200K**

EWW = 1800K (extra warm white)

WW = 2200K (extra warm white)

2700K **3000K** **4000K**

WW = 2700K (warm white)

WW = 3000K (warm white)

NW = 4000K (neutral white)

• select the type of luminous flux with 3 output power ranges :

LOW	MEDIUM	HIGH
25W	45W	60W

GENERAL CHARACTERISTICS

Housing/cover: made of die-cast aluminium.

Pole connection: pressed in die-cast aluminium. Suited for poles with a diameter 42-60 mm.

Optics : made of PMMA with high temperature resistance and UV rays.

Diffuser: in transparent, vandal-resistant and V2 self-extinguishing polycarbonate, UV-stabilized.

Coating: the fully automated powder-coating cycle involves a polyester-based, salt-spray corrosion-resistant and UV-stabilised paint.

Standard supply: dedicated electronic device to protect the LED module. Supplied with waterproof connector for quick installation and complete with an air-circulation valve; external screws and bolts in stainless steel. Supplied standard with double switch to choose the colour temperature between **1800K-2200K** or **2700K-3000K-4000K** and the type of lighting for up to 3 lighting levels

SURGE

Electronic safety device to protect the LED module and the related ballast compliant with EN 61547.

LOW FLICKER

Product with a very low flicker; uniform light for greater eye protection.

LIGHTING POINT MANAGEMENT OPTIONS ON REQUEST:

Virtual Midnight order with **subcode -30** - Stand-alone system with automatic luminous flux reduction in **4 steps**.
To increase energy savings at night when there are fewer people and vehicles around, a lighting fixture can be programmed according to a specific profile (customizable on request).

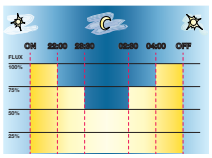

Factory settings	
Time	Flux
on ÷ 22:00	100%
22:00 ÷ 23:30	75%
23:30 ÷ 02:30	50%
02:30 ÷ 04:00	75%
04:00 ÷ off	100%

ATTENTION: *original settings and time slots for the "virtual midnight" value can be customized in up to 5 steps upon request*

Virtual midnight in 2 steps subcode -35

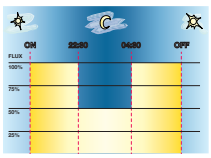

Settings upon request	
Time	Flux
on ÷ 22:30	100%
22:30 ÷ 04:30	50%
04:30 ÷ off	100%

Virtual midnight in 5 steps subcode -32

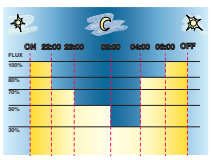

Settings upon request	
Time	Flux
on ÷ 22:00	100%
22:00 ÷ 23:00	70%
23:00 ÷ 02:00	50%
02:00 ÷ 04:00	30%
04:00 ÷ 06:00	80%
06:00 ÷ off	100%

ACCESSORIES



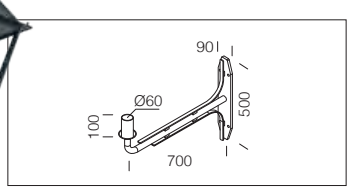

acc. 510 wall mounting bracket	
RAL 7021	991289-00
To be used for the direct wall-mounting of Granada.	

Upon request: "Liberty" bracket to be used for the direct pendant-mounting of Granada.



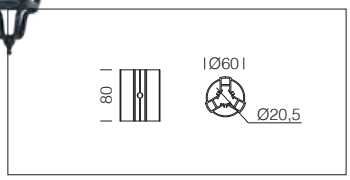

acc. 319 adapter for existing wall mounting bracket	
RAL 7021	427004-00
Adapter for 3/4" fittings, allows Granada to be quickly installed on existing connections.	

GRANADA is available as standard with a **1800K** and **2200K** colour temperature to reproduce a cosy ambient light associated with sunset. In this way, the artificial light becomes a less invasive element in the environment, **respecting the needs of the surrounding flora and fauna**.

Research has shown that different types of lighting can significantly impact nocturnal insects, birds and other creatures that play a vital role in local ecosystems. Environmental organisations are increasingly calling for this aspect to be properly considered in the design of new lighting systems. Modern LEDs, with a reduced blue light component, provide an opportunity to create less disruptive lighting in streets or parking areas near green spaces, while offering better protection for local wildlife.

1800K 2200K

1800K - 2200K: lamps with warm light at a colour temperature of 1800K-2200K *reduces the risks of an excessive exposure to harmful blue LED light* and allows a "softer" impact on inhabited zones, especially in historic centres.







GRANADA come with colour temperatures of **2700K**, **3000K** and **4000K**. These versions are ideal for urban spaces such as public parks, squares, and historic town centres that require an illumination that enhance architectural features while ensuring pedestrian safety, visual comfort, and minimising light pollution

2700K 3000K 4000K

2700K - 3000K - 4000K: lamps with 2700K-3000K-4000K white light, instead, is the best choice for lighting up urban areas, streets, residential centres and generally all areas where this type of light guarantees greater safety and visual comfort.

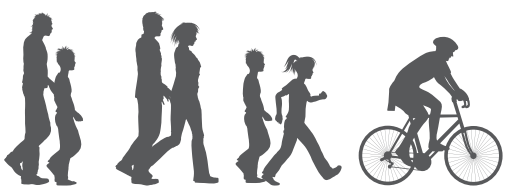





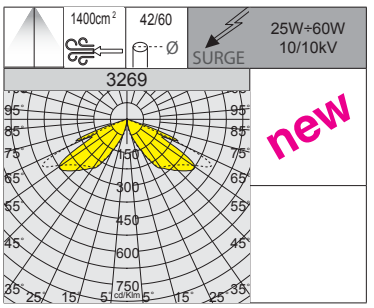

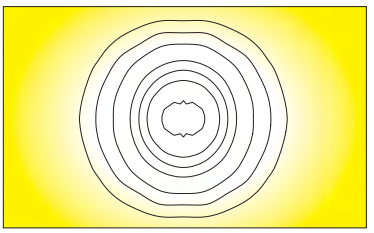



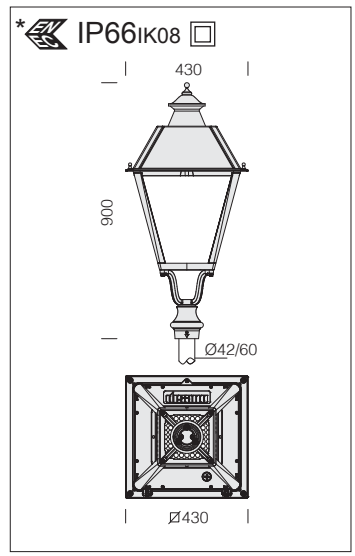

3269 Granada 2 - CCT 1800K-2200K / POWER SWITCH - rotosymmetric

CLD					LUMEN OUTPUT (tq= 25 °C)
LED	colour	weight	code	W tot	K - ølm - CRI
LED	RAL 7021	6,90	326968-00	25	1800K - **2755lm** - CRI>80
					2200K - **2900lm** - CRI>80
				45	1800K - **4940lm** - CRI>80
					2200K - **5200lm** - CRI>80
				60	1800K - **6650lm** - CRI>80
					2200K - **7000lm** - CRI>80

Ideal for lighting up historic town centres, residential areas, parks, and protected areas, **while respecting the needs of nocturnal flora and fauna**.

LED: power factor ≥0.9.
Luminous flux maintenance 80%: 100.000h (L80B20).

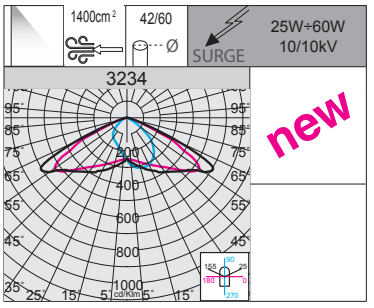

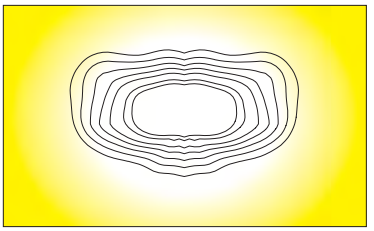



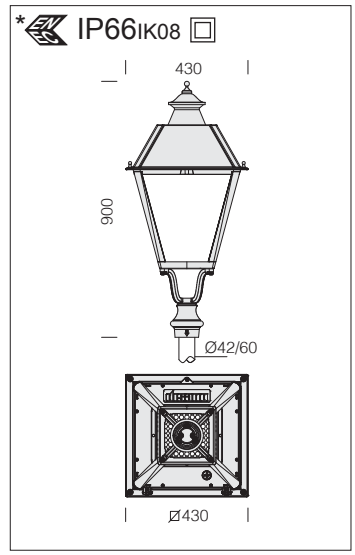

3234 Granada 2 - CCT 1800K-2200K / POWER SWITCH - asymmetric

CLD					LUMEN OUTPUT (tq= 25 °C)
LED	colour	weight	code	W tot	K - ølm - CRI
LED	RAL 7021	6,90	326966-00	25	1800K - **2715lm** - CRI>80
					2200K - **2855lm** - CRI>80
				45	1800K - **4865lm** - CRI>80
					2200K - **5125lm** - CRI>80
				60	1800K - **6550lm** - CRI>80
					2200K - **6895lm** - CRI>80

Ideal for lighting up historic town centres, residential areas, parks, and protected areas, **while respecting the needs of nocturnal flora and fauna**.

LED: power factor ≥0.9.
Luminous flux maintenance 80%: 100.000h (L80B20).

*IP66 IK08

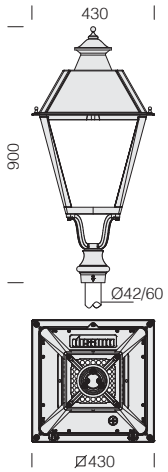



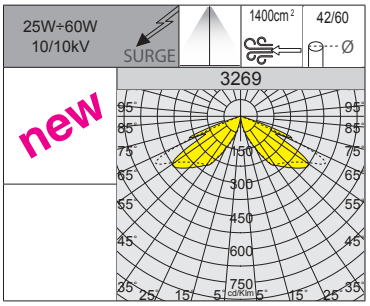

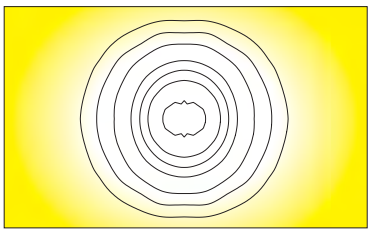

LED: power factor ≥0.9.
Luminous flux maintenance 80%: 100.000h (L80B20).

3269 Granada 1 - CCT 2700K-3000K-4000K / POWER SWITCH - rotosymmetric

		CLD			LUMEN OUTPUT (tq= 25 °C)
LED	colour	weight	code	W tot	K - ølm - CRI
LED	RAL 7021	6,90	326967-00	**25**	2700K - **3385lm** - CRI>80
					3000K - **3563lm** - CRI>80
					4000K - **3750lm** - CRI>80
				45	2700K - **6092lm** - CRI>80
					3000K - **6413lm** - CRI>80
					4000K - **6750lm** - CRI>80
				60	2700K - **8123lm** - CRI>80
					3000K - **8550lm** - CRI>80
					4000K - **9000lm** - CRI>80

*IP66 IK08

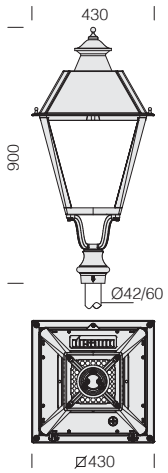



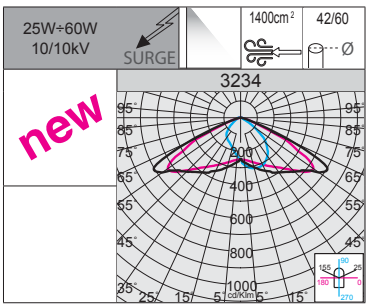

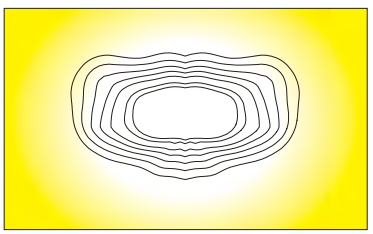

LED: power factor ≥0.9.
Luminous flux maintenance 80%: 100.000h (L80B20).

3234 Granada 1 - CCT 2700K-3000K-4000K / POWER SWITCH - asymmetric

		CLD			LUMEN OUTPUT (tq= 25 °C)
LED	colour	weight	code	W tot	K - ølm - CRI
LED	RAL 7021	6,90	326969-00	**25**	2700K - **3335lm** - CRI>80
					3000K - **3510lm** - CRI>80
					4000K - **3694lm** - CRI>80
				45	2700K - **6000lm** - CRI>80
					3000K - **6316lm** - CRI>80
					4000K - **6649lm** - CRI>80
				60	2700K - **8000lm** - CRI>80
					3000K - **8422lm** - CRI>80
					4000K - **8865lm** - CRI>80



GENERAL CHARACTERISTICS

Housing, lid, spokes, and pole connection: die-cast aluminium.

Diffuser: tempered glass, 5 mm thick, withstands thermal shock and impacts (UNI-EN 12150-1 : 2001).

Coating: the fully automated powder-coating cycle involves a polyester-based, salt-spray corrosion-resistant and UV-stabilised paint.

Upon request: protective coating recommended for marine environments within 5 km of the sea.

Equipment: nylon wiring plate, 30% fibre glass, removable, tool-free, for quick maintenance. Standard knife switch, which enables to automatically cut off the power supply during maintenance. Complete with waterproof connector for quick installation (art. 3202, 3209, 3212, 3214, 3322). Can be adjusted by loosening the bolts without taking the lighting fixture apart. Temperature control device. In the event of an unexpected LED temperature rise caused by particular weather conditions or a LED failure, the system will reduce the luminous flux to lower the working temperature and guarantee proper operation.

OTHER CHARACTERISTICS

SURGE Electronic safety device to protect the LED module and the related ballast compliant with EN 61547.
It works in two modes:
- differential mode: surge between power cables and between the phase and neutral.
- common mode: surge between power, L/N and ground cables or between the fixture's body if it is of class II and installed on a metal pole.

LOW FLICKER Product with a very low flicker; uniform light for greater eye protection.

Available versions in colour
WHITE **RAL 9003**



THE RANGE OF LUCERNA STREET LAMPS IS AVAILABLE IN THE FOLLOWING COLOUR TEMPERATURES:

2200K **2200K (subcode -73):** lamps with warm amber light at a colour temperature of 2200K reduces the risks of an excessive exposure to harmful blue LED light and allows a "softer" impact on inhabited zones, especially in historic centres.

3000K 4000K **3000K - 4000K as standard:** lamps with 3000K-4000K white light, instead, is the best choice for lighting up urban areas, streets, residential centres and generally all areas where this type of light guarantees greater safety and visual comfort.



CLD PROG

PROG (CLD PROG) AVAILABLE FUNCTIONS

Luminous flux setup	This can be done by programming the drive current values requested when ordering/purchasing the fixture
CLO (Constant Light Output)	The lighting fixture maintains a constant light output throughout its entire service life

LIGHTING POINT MANAGEMENT OPTIONS ON REQUEST

possibility to choose different lighting point management systems according to the system's needs:

1-10V dimming ordered with **sub-code -12**	Adjustment range from 10%-100% with 1-10V
Virtual Midnight order with **subcode -30**	Stand-alone system with automatic luminous flux reduction in **4 steps**. To increase energy savings at night when there are fewer people and vehicles around, a lighting fixture can be programmed according to a specific profile (customizable on request). The fixture reduces its luminous flux through a self-learning process which, depending on the previous switching on and off times, will determine a hypothetical "virtual midnight". This is the average value between the time the fixture is switched on (sunset) and switched off (sunrise). The "virtual midnight" is the reference point for dimming lights according to the desired profile. The device is integrated in the LED driver and therefore does not require any modification to the system. *In order for the system to function correctly, the system must be adjusted by a device that turns the system on and off on a regular basis every day.* ***ATTENTION:*** *original settings and time slots for the "virtual midnight" value can be customized in up to 5 steps upon request.*

Factory settings

Time	Flux
on ÷ 22:00	100%
22:00 ÷ 23:30	75%
23:30 ÷ 02:30	50%
02:30 ÷ 04:00	75%
04:00 ÷ off	100%

PLC remote control ordered with **sub-code -0078**	Point-to-point and system management and diagnosis system

For more information see page XX-XXIII



Exemple with Zhaga Socket (subcode -0054)

LUMINAIRE DESIGNED FOR INSTALLATION ON NEMA OR ZHAGA SOCKET: to monitor and manage public lighting centrally, lighting fixtures will always be more equipped with wireless controls that will allow their integration with the IoT. Today the market offers two solutions: **NEMA and ZHAGA**. Both solutions offer an electrical and mechanical connection between the control antenna and the lighting fixture.

Nema Socket order with **subcode -40** (sealing cap to be ordered separately)	Mounted directly on the fixture's body, ideal for remote lighting management applications.
Zhaga Socket order with **subcode -0054** (complete with sealing cap)	



SUSPENSION ACCESSORIES: ART 3206 - 3216 - 3326

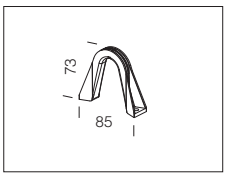

acc. 329 suspension unit	
RAL 7021	998003-00
In die-cast aluminium. Supplied separately for suspension applications.	

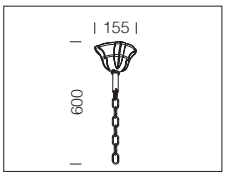

acc. 518 chain connection	
RAL 7021	991284-00
Supplied with suspension chain. To be used with acc. 329.	

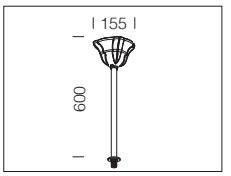

acc. 519 rod connection	
RAL 7021	991285-00
Supplied with suspension rod.	

RG0 Ethr

+40 C° -30

U.V.

LOW FLICKER

3000K

4000K

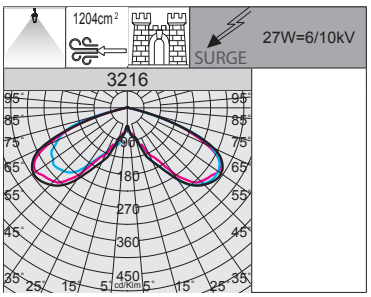



IP66IK08

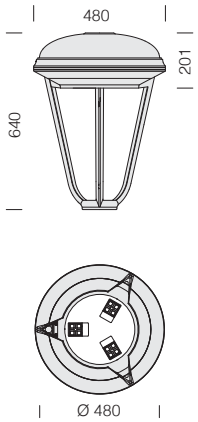

3216 Lucerna R 6					
		CLD PROG			LUMEN OUTPUT (tq= 25 °C)
LED	colour	weight	code	W tot	K - ølm 350mA - CRI
LED	RAL 7021	12.60	327210-00	**27**	4000K - 3390lm - CRI>70
			327210-39		3000K - 3153lm - CRI>70

LED: power factor ≥0.9.
Luminous flux maintenance 80%: 100.000h (L80B10).

Example	Power supply	n.LED	W tot	K	ølm
upon request	530mA	12	**42**	**4000K**	5180lm

n.LED	W tot	K	ølm
12	**42**	**3000K**	4817lm

IP66IK08

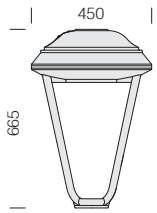

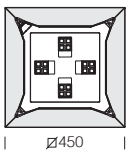



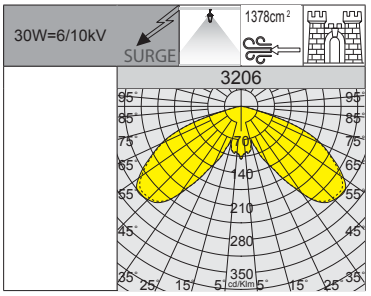

RGO Ethr | +40 C° -30 | U.V. | LOW FLICKER | 3000K | 4000K

LED: power factor ≥0.9.
Luminous flux maintenance 80%: 100.000h (L80B10).

3206 Lucerna Q 6

		CLD PROG			LUMEN OUTPUT (tq= 25 °C)
LED	colour	weight	code	W tot	K - ølm 300mA - CRI
LED	RAL 7021	12.60	327200-00	**30**	4000K - 3830lm - CRI>70
			327200-39		3000K - 3562lm - CRI>70

Example	Power supply	n.LED	W tot	K	ølm
upon request	470mA	16	**48**	**4000K**	5700lm

n.LED	W tot	K	ølm
16	**48**	**3000K**	5301lm

IP66IK08

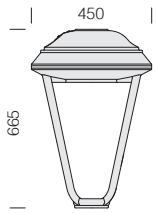





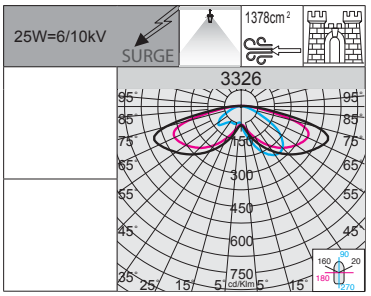

RGO Ethr | +40 C° -30 | U.V. | LOW FLICKER | 3000K | 4000K

LED: power factor ≥0.9.
Luminous flux maintenance 90%: 100.000h (L90B10).

3326 Lucerna Q 9 FX

		CLD PROG			LUMEN OUTPUT (tq= 25 °C)
LED	colour	weight	code	W tot	K - ølm 530mA - CRI
LED	RAL 7021	12.60	327202-00	**25**	4000K - 4050lm - CRI 70
			327202-39		3000K - 3870lm - CRI 70

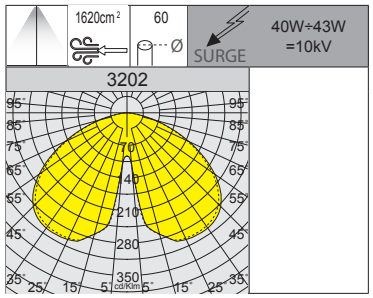



IP66 IK08

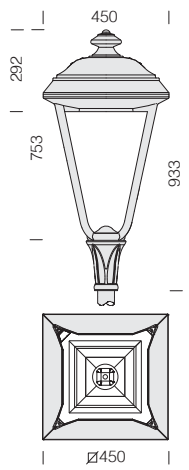

3202 Lucerna Q - COB

		CLD			LUMEN OUTPUT (tq= 25 °C)
LED	colour	weight	code	W tot	K - ølm 1050mA - CRI
COB	RAL 7021	12.60	326923-00	**40**	4000K - 3017lm - CRI 80
			326923-39		3000K - 2806lm - CRI 80
COB AMBER			326923-73	**43**	2200K - 2953lm - **AMBER**

Note: when ordering, make sure you select the **AMBER LED** type best suited for your lighting design and installation needs.

LED: power factor ≥0,92. Luminous flux maintenance:	
80%	90.000h (L80B10)
70%	100.000h (L70B50)

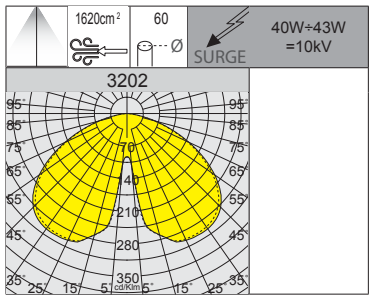

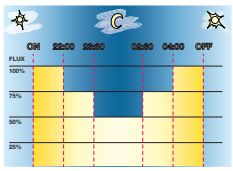

Sub-code -30: version with **virtual midnight**.



IP66 IK08

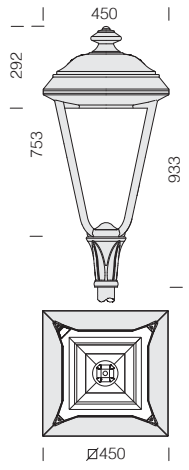

3202 Lucerna Q MIDNIGHT - COB

		CLD MIDNIGHT			LUMEN OUTPUT (tq= 25 °C)
LED	colour	weight	code	W tot	K - ølm 1050mA - CRI
COB	RAL 7021	12.60	326923-30	**40**	4000K - 3017lm - CRI 80
			326923-3028		3000K - 2806lm - CRI 80
COB AMBER			326923-3073	**43**	2200K - 2953lm - **AMBER**

Note: when ordering, make sure you select the **AMBER LED** type best suited for your lighting design and installation needs.

LED: power factor ≥0,92. Luminous flux maintenance:	
80%	90.000h (L80B10)
70%	100.000h (L70B50)

IP66 IK08

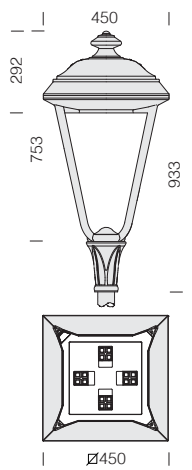



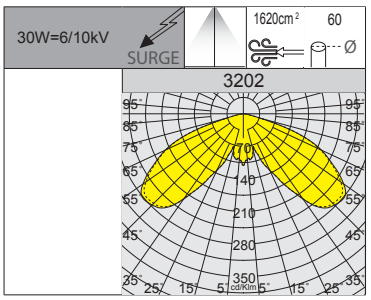

RGO Ethr
+40 C° -30
U.V.
LOW FLICKER
3000K
4000K

LED: power factor ≥0.9.
Luminous flux maintenance 80%: 100.000h (L80B10).

3202 Lucerna Q

		CLD PROG			LUMEN OUTPUT (tq= 25 °C)
LED	colour	weight	code	W tot	K - ølm 300mA - CRI
LED	RAL 7021	12.60	326920-00	**30**	4000K - 3830lm - CRI>70
			326920-39		3000K - 3562lm - CRI>70

Example	Power supply	n.LED	W tot	K	ølm
upon request	470mA	16	**48**	**4000K**	5700lm

n.LED	W tot	K	ølm
16	**48**	**3000K**	5301lm

IP66 IK08

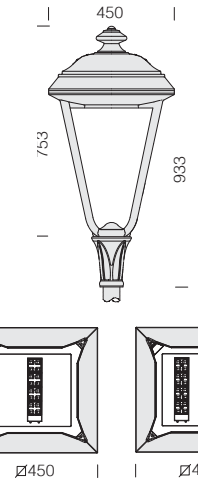



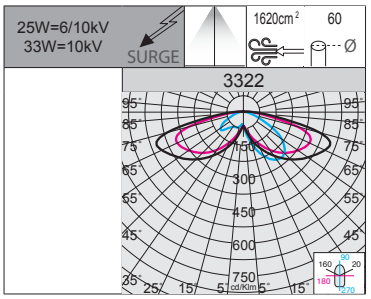

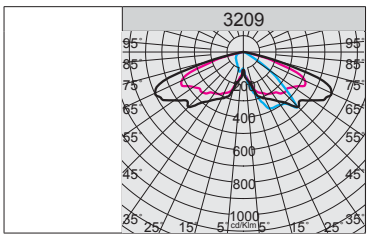

RGO Ethr
+40 C° -30
U.V.
LOW FLICKER
3000K
4000K

LED: power factor ≥0.9.
Luminous flux maintenance 90%: 100.000h (L90B10).

3322 Lucerna Q 7 FX

		CLD PROG			LUMEN OUTPUT (tq= 25 °C)
LED	colour	weight	code	W tot	K - ølm 530mA - CRI
LED	RAL 7021	12.60	326922-00	**25**	4000K - 4050lm - CRI 70
			326922-39		3000K - 3870lm - CRI 70

3209 Lucerna Q 8 - residential amenities

		CLD PROG			LUMEN OUTPUT (tq= 25 °C)
LED	colour	weight	code	W tot	K - ølm 350mA - CRI
LED	RAL 7021	12.60	327220-00	**33**	4000K - 5320lm - CRI>70
			327220-39		3000K - 5045lm - CRI>70

Example	Power supply	n.LED	W tot	K	ølm
upon request	520mA	32	**50**	**4000K**	7904lm

n.LED	W tot	K	ølm
32	**50**	**3000K**	7495lm

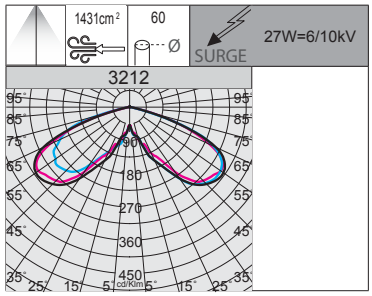



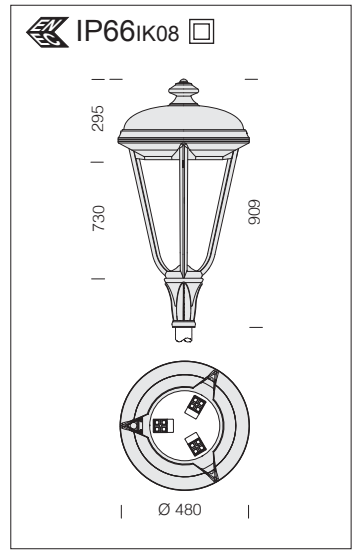

3212 Lucerna R					
		CLD PROG			LUMEN OUTPUT (tq= 25 °C)
LED	colour	weight	code	W tot	K - ølm 350mA - CRI
LED	RAL 7021	12.60	326970-00	**27**	4000K - 3390lm - CRI>70
			326970-39		3000K - 3153lm - CRI>70

LED: power factor ≥0.9.
Luminous flux maintenance 80%: 100.000h (L80B10).

	Power supply	n.LED	W tot	K	ølm
Upon request	530mA	12	**42**	**4000K**	5180lm

n.LED	W tot	K	ølm
12	**42**	**3000K**	4817lm

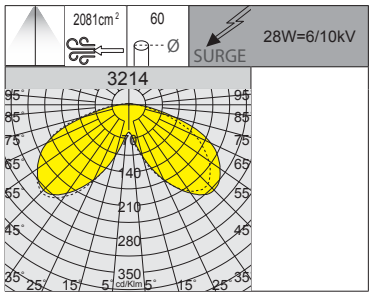



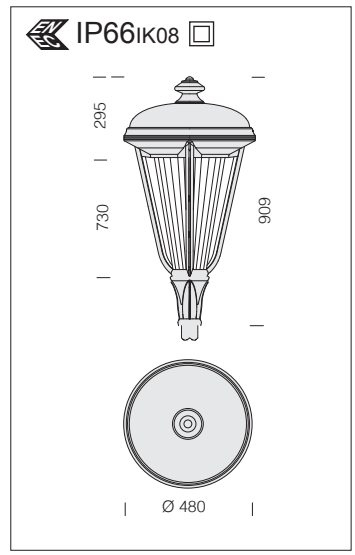

3214 Lucerna R					
		CLD PROG			LUMEN OUTPUT (tq= 25 °C)
LED	colour	weight	code	W tot	K - ølm 350mA - CRI
LED	RAL 7021	12.60	326985-00	**28**	4000K - 2626lm - CRI>70

LED: power factor ≥0.9.
Luminous flux maintenance 80%: 100.000h (L80B10).

Diffuser: in shatterproof and self-extinguishing V2 polycarbonate, UV-stabilized, frosted inside for improved glare control.

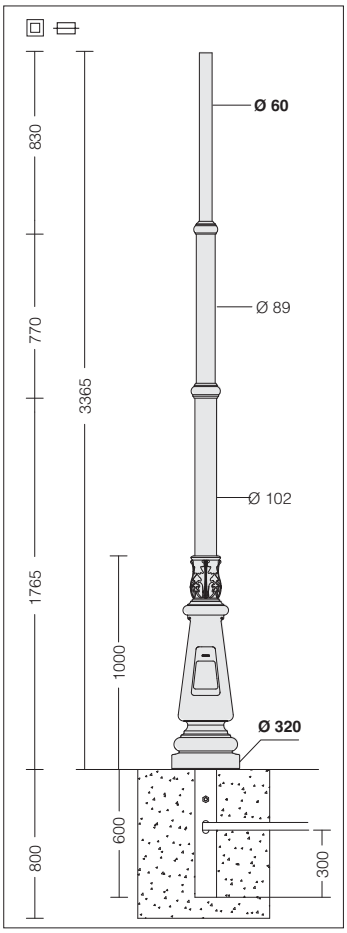

Size of concrete plinth (subject to variations in the ground).

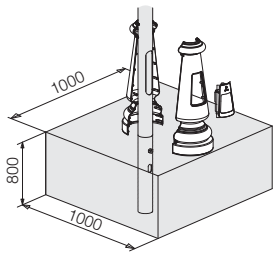



acc. 1411 - Lucerna pole to be buried

colour	code							Ø	Ø
RAL 7021	425230-00	3965	3365	600	300	320	60	**Ø 320**	Ø 60

Hot galvanized steel poles, coated using thermosetting polyester powder.
Base, inspection window and decorations made from die-cast aluminium, pressed and varnished. Equipped with inspection window, 2 protection fuse holders, 2 fuses (16A), removable terminal block.
Stainless steel screws, double insulation.



Avaible on request: an inspection window that can be customized logo.

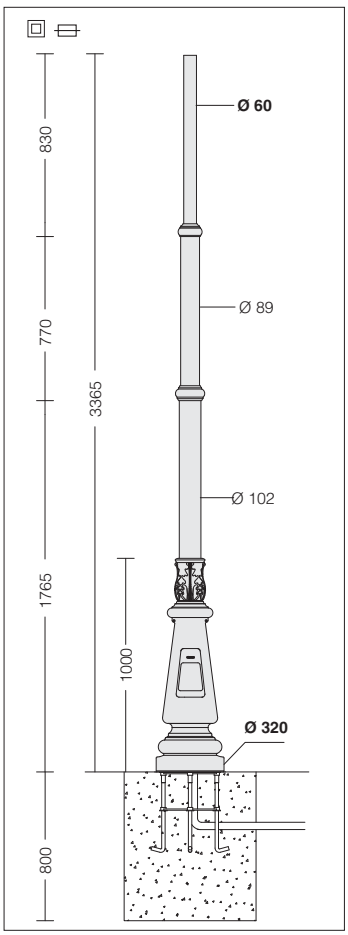

Size of concrete plinth (subject to variations in the ground).

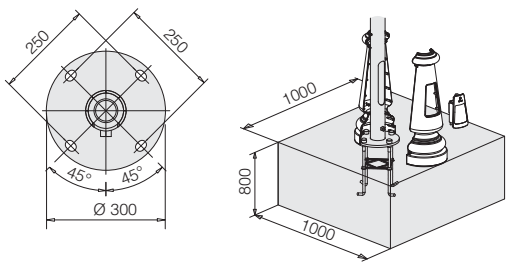



acc. 1410 - Lucerna pole with base

colour	code					Ø	Ø	
RAL 7021	425220-00	3365	300	320	60	**Ø 320**	Ø 60	Ø 300

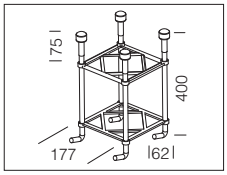

acc. 299 log bolts
991396-00
Log bolts supplied with poles 1410.

NOTE: before selecting the appropriate pole, make all necessary wind pressure resistance tests, pursuant to the Standards or Legislative Decrees in force in the countries where the pole will be mounted.



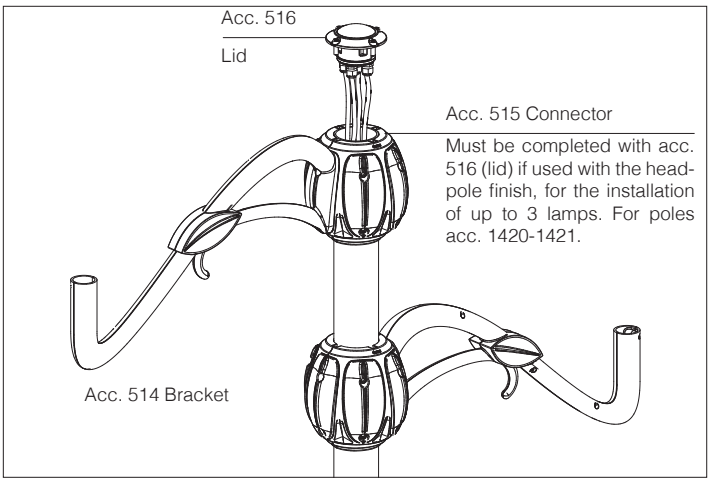

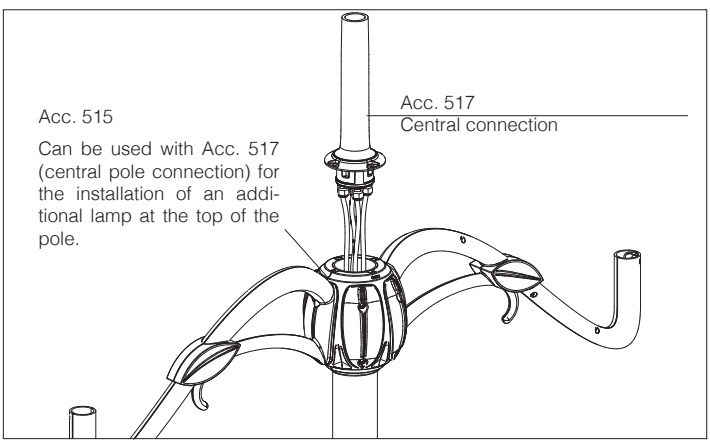

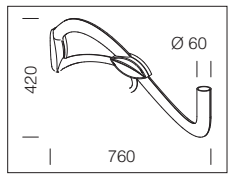

acc. 514 bracket

RAL 7021	991280-00

Bracket in die-cast aluminium with feeder, external PVC sheath and double insulated conductors, 2x1 sqmm section. Stainless steel screws.

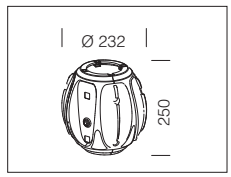

acc. 515 connector Ø 102

RAL 7021	991281-00

In die-cast aluminium for stainless steel pole Ø 102, for the installation of up to 3 brackets (acc. 514) plus a central bracket (acc. 517). Stainless steel screws.

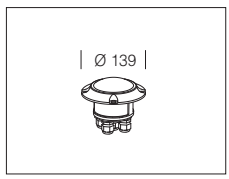

acc. 516 lid

RAL 7021	991282-00

Die-cast aluminium lid. Supplied with plastic distribution box and terminal for power connection. Stainless steel screws.

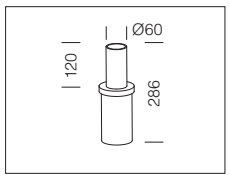

acc. 528 mast top pole connection

RAL 7021	991288-00

To be used as a mast top pole connection on poles acc. 1420/21.

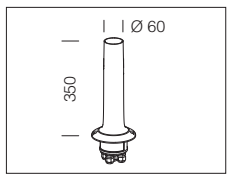

acc. 517 central connection

RAL 7021	991283-00

Made from die-cast aluminium, to be used with acc. 1420-21. Supplied with power lead, 2x1 sqmm section. Plastic distribution box and terminal for electrical connection. Stainless steel screws. To be used for pole-head connection with acc. 1420-21.

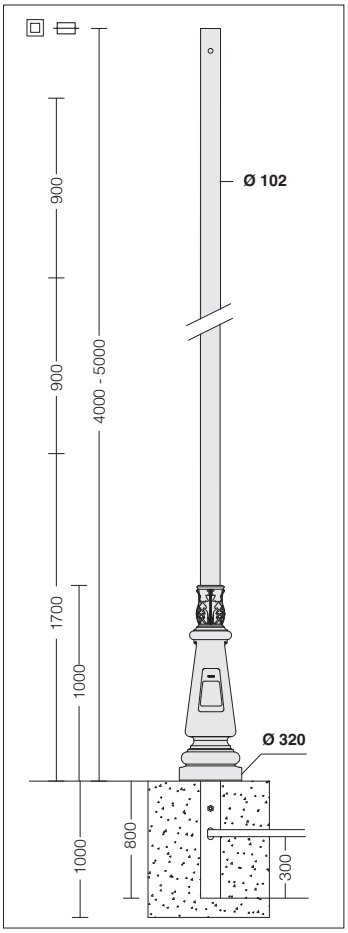

Size of concrete plinth (subject to variations in the ground).

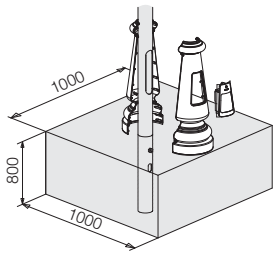



acc. 1421 - Lucerna pole to be buried

colour	code							Ø	Ø
RAL 7021	425330-00	4800	4000	800	300	320	60	**Ø 320**	Ø 102
RAL 7021	425331-00	5800	5000	800	300	320	60	**Ø 320**	Ø 102

Hot galvanized steel poles, coated using thermosetting polyester powder.
Base, inspection window and decorations made from die-cast aluminium, pressed and varnished. Equipped with inspection window, 2 protection fuse holders, 2 fuses (16A), removable terminal block.
Stainless steel screws, double insulation.



Avaible on request: an inspection window that can be customized logo.

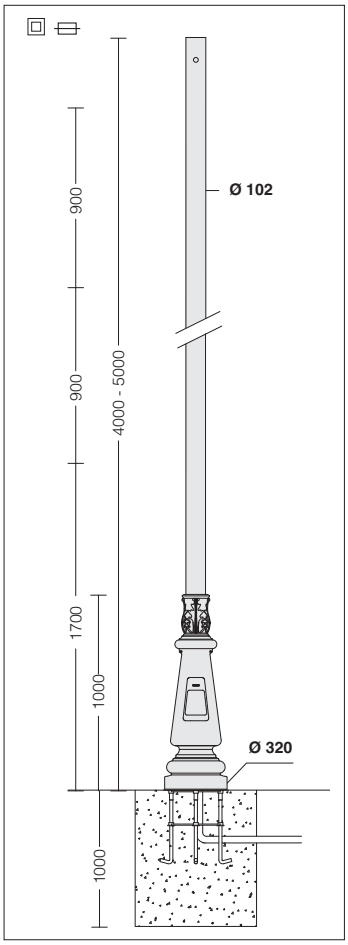

Size of concrete plinth (subject to variations in the ground).

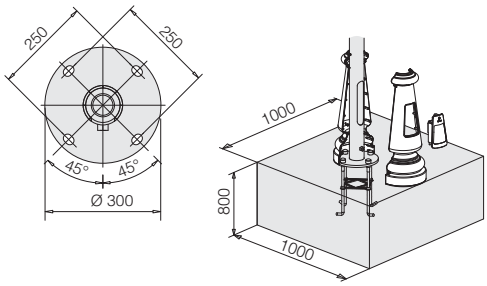



acc. 1420 - Lucerna pole with base

colour	code					Ø	Ø	
RAL 7021	425320-00	4000	300	320	60	**Ø 320**	Ø 102	Ø 300
RAL 7021	425321-00	5000	300	320	60	**Ø 320**	Ø 102	Ø 300

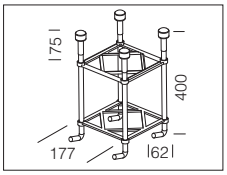

acc. 299 log bolts
991396-00
Log bolts supplied with poles 1420.

NOTE: before selecting the appropriate pole, make all necessary wind pressure resistance tests, pursuant to the Standards or Legislative Decrees in force in the countries where the pole will be mounted.



Liberty Pole, complete with one or two brackets. Internal steel pole with die-cast aluminium coating. Die-cast aluminium inspection window. Complete with 2 protection fuse holders, 2 fuses, 16A, removable 4-pole terminal block, 16sqmm cross section.

NOTE: The possibility to attach an assembly to the pole is subject to a wind pressure resistance assessment in the areas regulated by CNR-UNI standard 10032-67, according to load assumptions in UNI UNI 40/6 standard. An accurate and suitable protection or insulation of the surfaces involved is recommended to avoid any direct contact with the new masonry or concrete screed.



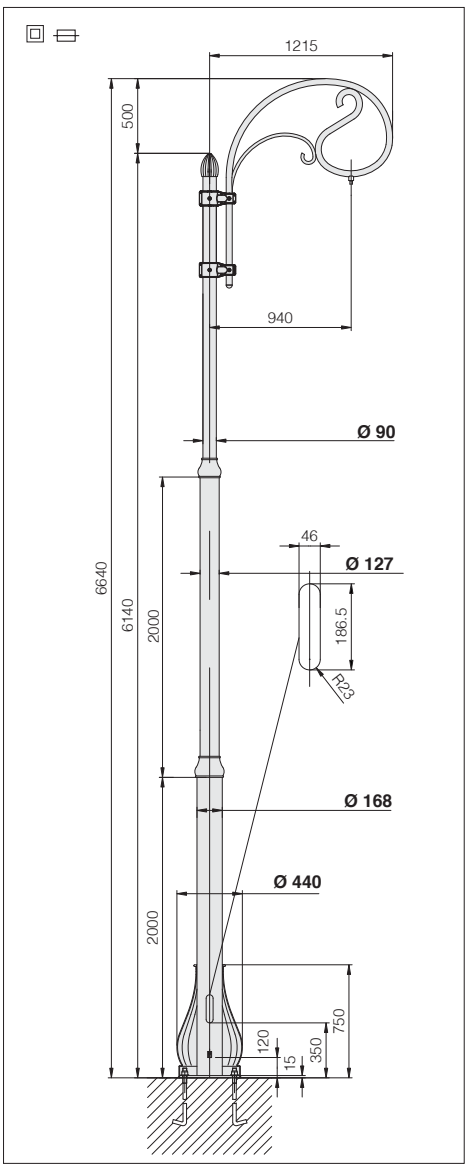

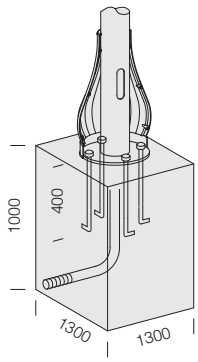

Cement base dimensions (subject to soil variations) for underground sinking of the 4 log bolts of acc. 1498.

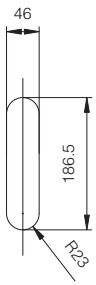

Inspection window with easily removable terminal block for quick connection.

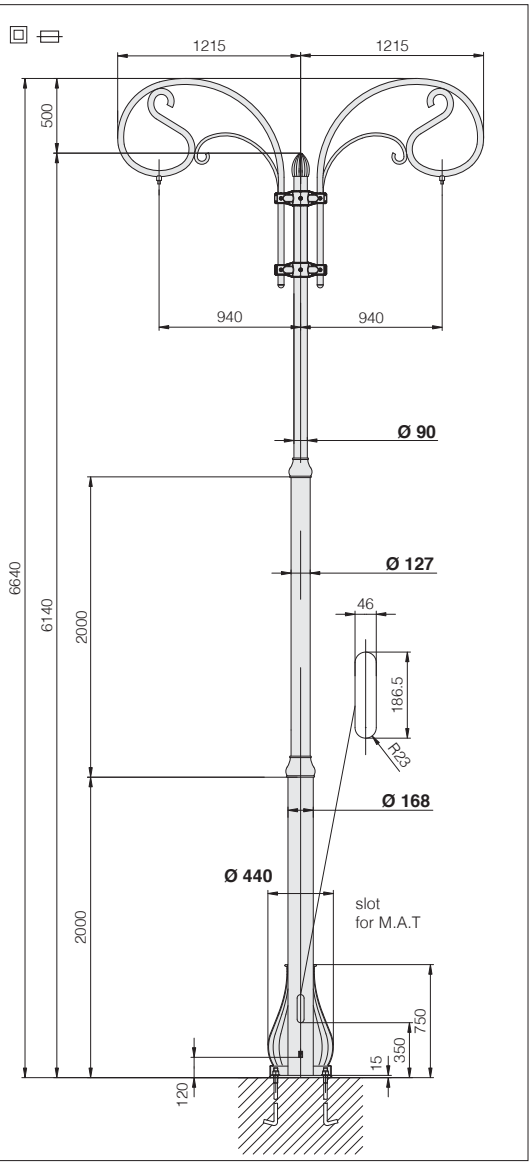

acc. 297 log bolts
426448-00
Log bolts are always to be used with the pole 1498.

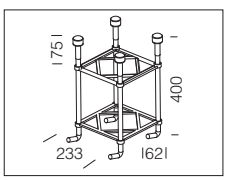

acc. 1498 Liberty pole									
version	colour	code					Ø	Ø	
with 1 arm	RAL 7021	425203-00	6140	350	186.5	46	**Ø 440**	Ø 90	Ø 400 hole 30x22
with 2 arms	RAL 7021	425204-00							
Log bolts are to be bought separately acc. 297.									



GENERAL CHARACTERISTICS

Housing/cover: in die-cast aluminium.

Optics: combined optical system made in PMMA.

Diffuser: in V2 self-extinguishing, UV stabilized, clear polycarbonate.

Coating: the fully automated powder-coating cycle involves a polyester-based, salt-spray corrosion-resistant and UV-stabilised paint.

Upon request: protective coating recommended for marine environments within 5 km of the sea.

Standard supply: automatic temperature control inside the device with automatic resetting; complete with waterproof connector for quick installation. With dedicated electronic device to protect the LED module.

LED: Power factor ≥0.9.
Luminous flux maintenance 80%: >100.000h (L80B10).



OTHER CHARACTERISTICS

SURGE

Electronic safety device to protect the LED module and the related ballast compliant with EN 61547.
It works in two modes:
- differential mode: surge between power cables and between the phase and neutral.
- common mode: surge between power, L/N and ground cables or between the fixture's body if it is of class II and installed on a metal pole.

LOW FLICKER

Product with a very low flicker; uniform light for greater eye protection.

3000K 4000K

3000K - 4000K as standard: lamps with 3000K-4000K white light, instead, is the best choice for lighting up urban areas, streets, residential centres and generally all areas where this type of light guarantees greater safety and visual comfort.

ACCESSORIES

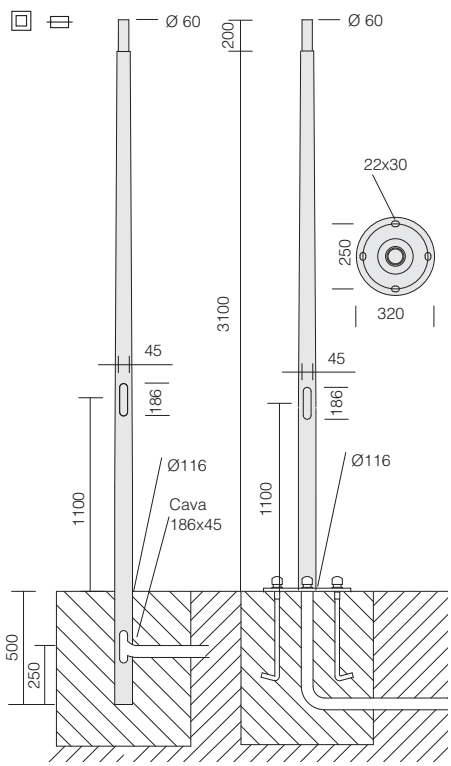

Poles and arm in painted galvanized aluminium. Designed with a hole for the insertion of the power supply cable, with mast-top mounting of ø60 cm for arm acc. 513 or 532. With inspection window, complete with 4-pole/3-way removable 10 mm2 terminal block and 2.5 mm2 shunt, with 16A fuse. The version with base requires the purchase of 4 long bolts, nuts and caps to be buried for ground installation.

acc. 1441 - Steel cone-shaped to be buried for acc. 513/532

colour	code							Ø	Ø
grey	425266-00	3600	3100	500	1100	186	45	**Ø 116**	Ø 60
graphite	425267-00								

acc. 1440 - Steel cone-shaped with base acc. 513/532

colour	code					Ø	Ø	
grey	425276-00	3100	1100	186	45	**Ø 116**	Ø 60	Ø 320 foro 22x30
graphite	425277-00							

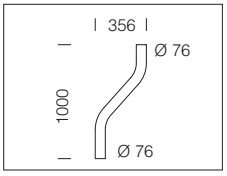

acc. 513 arm for pole

grey	991290-00
graphite	991291-00
arm for Aura pole acc. 1440-1441.	

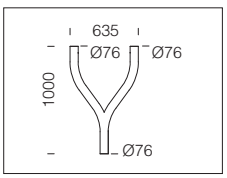

acc. 532 double arm for pole

grey	991292-00
graphite	991293-00
arm for Aura pole acc. 1440-1441.	

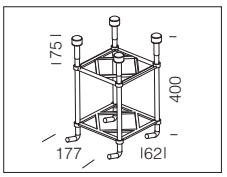

acc. 299 Long bolts

991396-00
Long bolts should always be purchased with pole 1440.

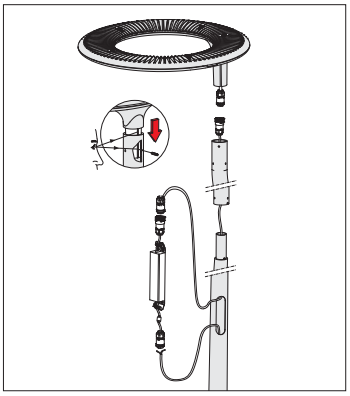

Fixture supplied with driver to be placed inside the pole, complete with 3.5 m connector and cable.

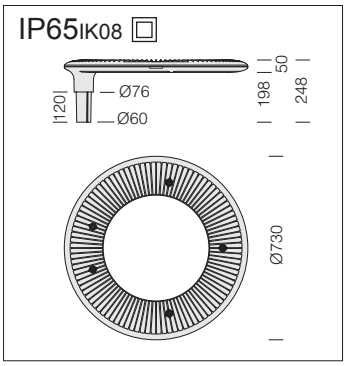

LED: power factor ≥0.92.
Luminous flux maintenance 80%: >100.000h (L80B10).

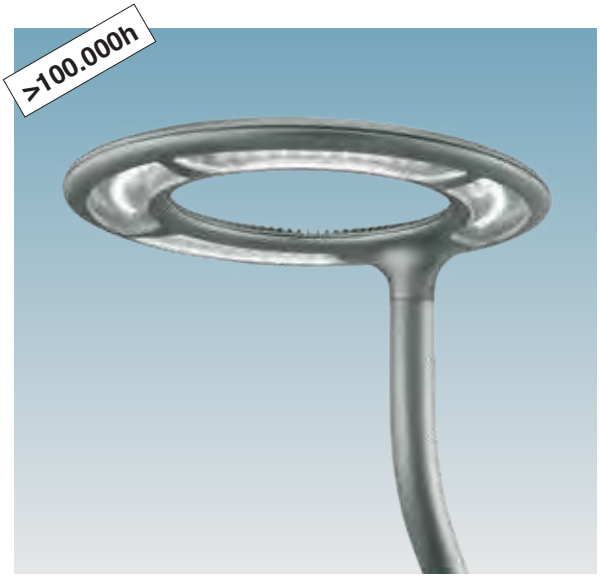

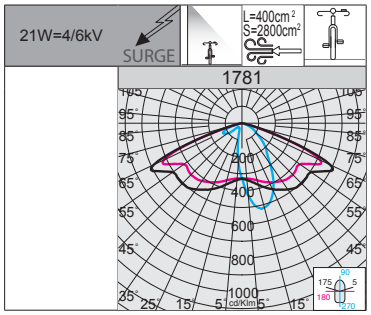

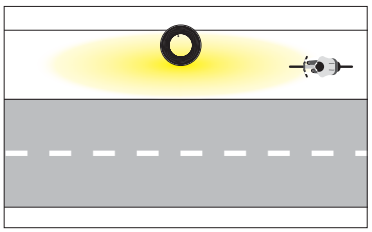

RG0 Ethr
+40 C° -40
U.V.
LOW FLICKER
3000K
4000K

1781 Aura - cycle-pedestrian

		CLD			LUMEN OUTPUT (tq= 25 °C)
LED	colour	weight	code	W tot	K - ølm - CRI
LED	grey	8.50	423280-00	**21**	4000K - 2905lm - CRI 70
	graphite		423281-00		
LED	grey	8.50	423280-39	**21**	3000K - 2715lm - CRI 70
	graphite		423281-39		

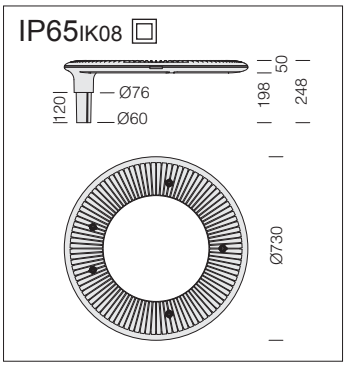

LED: power factor ≥0.92.
Luminous flux maintenance 80%: >100.000h (L80B10).

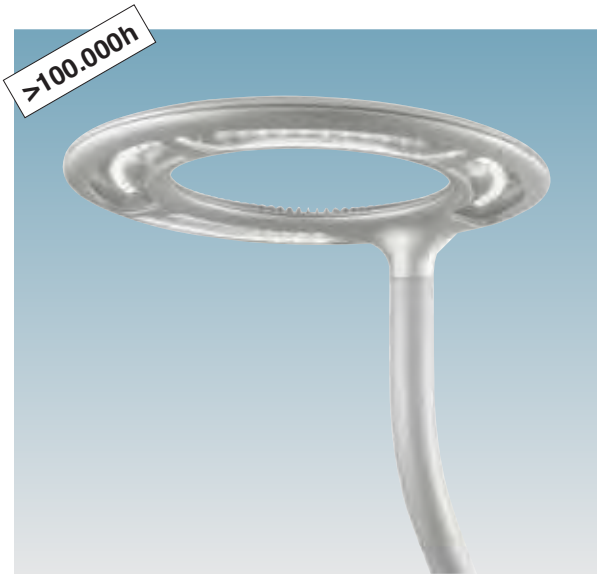

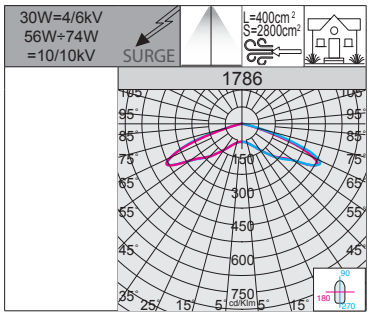

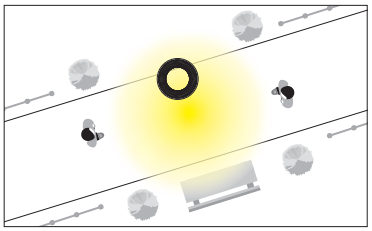

RG0 Ethr
+40 C° -40
U.V.
LOW FLICKER
3000K
4000K

1786 Aura - rotosymmetric

		CLD			LUMEN OUTPUT (tq= 25 °C)
LED	colour	weight	code	W tot	K - ølm - CRI
LED	grey	8.50	423278-00	**30**	4000K - 4200lm - CRI 70
	graphite		423279-00		
LED	grey	8.50	423278-39	**30**	3000K - 3924lm - CRI 70
	graphite		423279-39		
LED	grey	8.50	423270-00	**56**	4000K - 7242lm - CRI 70
	graphite		423271-00		
LED	grey	8.50	423270-39	**56**	3000K - 6768lm - CRI 70
	graphite		423271-39		
LED	grey	8.50	423274-00	**74**	4000K - 9170lm - CRI 70
	graphite		423277-00		
LED	grey	8.50	423274-39	**74**	3000K - 8528lm - CRI 70
	graphite		423277-39		



GENERAL CHARACTERISTICS

Housing and frame: pressed in die-cast aluminium and designed with a very small surface exposed to wind. Cooling fins are integrated into the cover.

Optics: made of PMMA with high temperature resistance and UV rays. Flow recovery in V0 polycarbonate, metallized high yield.

Pole connection: version with pole connector incorporated directly into the fixture's housing to enable whip-type installation on poles with diameters Ø60/62mm. Adjustable from 0° to +15° for side-mount applications; and from 0° to +15° for top-mount applications. Tilting angle of 5°.

Diffuser: extra-clear tempered glass, 4 mm thick, resistant to thermal shocks and impacts (UNI-EN 12150-1: 2001). Art. 3334 in plexiglass.

Coating: the fully automated powder-coating cycle involves a polyester-based, salt-spray corrosion-resistant and UV-stabilised paint.

Upon request: protective coating recommended for marine environments within 5 km of the sea.

OTHER CHARACTERISTICS

Standard supply: Complete with waterproof connector for quick installation. Supplied with double insulation switch that cuts off electricity when the cover is opened. Electric gear on a removable tray for easy maintenance. Automatic temperature control inside the device with automatic resetting; equipped with an air-circulation valve.

SURGE Electronic safety device to protect the LED module and the related ballast compliant with EN 61547.
It works in two modes:
- differential mode: surge between power cables and between the phase and neutral.
- common mode: surge between power, L/N and ground cables or between the fixture's body if it is of class II and installed on a metal pole.

CLD PROG

PROG (CLD PROG) AVAILABLE FUNCTIONS

Luminous flux setup	This can be done by programming the drive current values requested when ordering/purchasing the fixture
CLO (Constant Light Output)	The lighting fixture maintains a constant light output throughout its entire service life

LIGHTING POINT MANAGEMENT OPTIONS ON REQUEST

possibility to choose different lighting point management systems according to the system's needs:

1-10V dimming ordered with **sub-code -12**	Adjustment range from 10%-100% with 1-10V
Virtual Midnight order with **subcode -30**	Stand-alone system with automatic luminous flux reduction in **4 steps**. To increase energy savings at night when there are fewer people and vehicles around, a lighting fixture can be programmed according to a specific profile (customizable on request). The fixture reduces its luminous flux through a self-learning process which, depending on the previous switching on and off times, will determine a hypothetical "virtual midnight". This is the average value between the time the fixture is switched on (sunset) and switched off (sunrise). The "virtual midnight" is the reference point for dimming lights according to the desired profile. The device is integrated in the LED driver and therefore does not require any modification to the system. *In order for the system to function correctly, the system must be adjusted by a device that turns the system on and off on a regular basis every day.* ***ATTENTION:*** *original settings and time slots for the "virtual midnight" value can be customized in up to 5 steps upon request.*
PLC remote control ordered with **sub-code -0078**	Point-to-point and system management and diagnosis system
For more information see page XX-XXIII	

Factory settings

Time	Flux
on ÷ 22:00	100%
22:00 ÷ 23:30	75%
23:30 ÷ 02:30	50%
02:30 ÷ 04:00	75%
04:00 ÷ off	100%



Pole joint: acc. 290.

ACCESSORIES

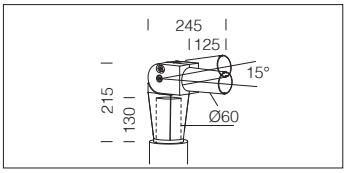

acc. 290 joint	
graphite	991439-00
grey	991438-00
To be used for installation on poles acc. 1477/1478 – 1485/1487.	

IP66 IK08

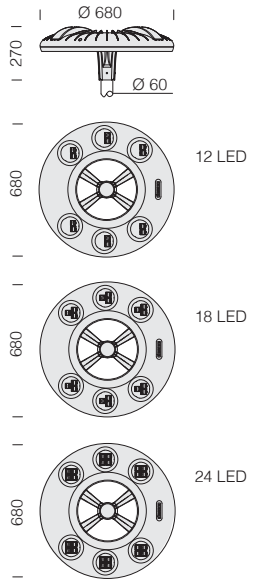

LED: power factor >0.9.
Luminous flux maintenance 80%: >100.000h (L80B20).



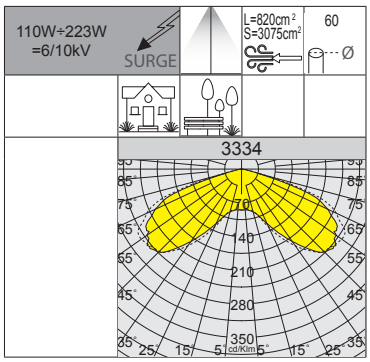

RG0 Ethr
+40 C° -30
U.V.
LOW FLICKER

3334 Disco 5 - central fixing

		CLD PROG			LUMEN OUTPUT (tq= 25 °C)
LED	colour	weight	code	W tot	K - ølm 740mA - CRI
LED	grey	12.00	330110-00	**110**	4000K - 13153lm - CRI 80
	graphite		330113-00		
LED	grey	12.00	330111-00	**162**	4000K - 19730lm - CRI 80
	graphite		330114-00		
LED	grey	15.00	330112-00	**223**	4000K - 26306lm - CRI 80
	graphite		330115-00		

Example	Power supply	n.LED	W tot	ølm
upon request	430mA	12	**63**	8184lm
		18	**93**	12276lm
		24	**124**	16368lm

IP66 IK08

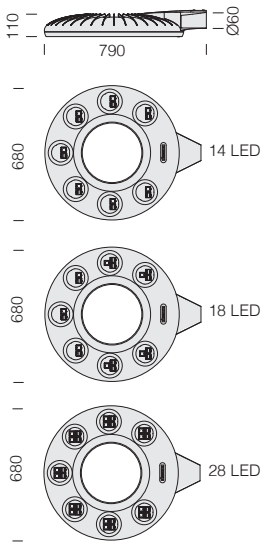

LED: power factor >0.9.
Luminous flux maintenance 80%: >100.000h (L80B20).



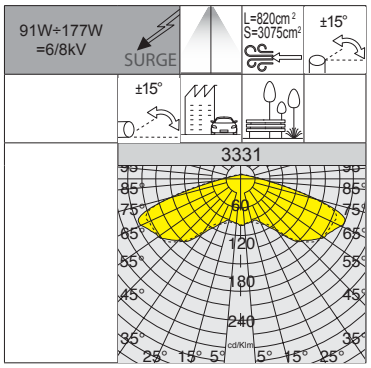

RG0 Ethr
+40 C° -30
U.V.
LOW FLICKER

3331 Disco 2 - wide beam

		CLD PROG			LUMEN OUTPUT (tq= 25 °C)
LED	colour	weight	code	W tot	K - ølm 530mA - CRI
LED	grey	12.00	330040-00	**91**	4000K - 11459lm - CRI 80
	graphite		330043-00		
LED	grey	12.00	330041-00	**116**	4000K - 14732lm - CRI 80
	graphite		330044-00		
LED	grey	15.00	330042-00	**177**	4000K - 22917lm - CRI 80
	graphite		330045-00		



GENERAL CHARACTERISTICS

Housing and frame: pressed in die-cast aluminium and designed with a very small surface exposed to wind. Cooling fins are integrated into the cover.

Optics: made of PMMA with high temperature resistance and UV rays. Flow recovery in V0 polycarbonate, metallized high yield. Group risk-free according to EN62471.

Diffuser: in plexiglass.

Coating: the fully automated powder-coating cycle involves a polyester-based, salt-spray corrosion-resistant and UV-stabilised paint.

Standard supply: supplied with double insulation switch. Automatic temperature control device.
In the event of an unexpected LED temperature rise caused by particular weather conditions or a LED failure, the system will reduce the luminous flux to lower the working temperature and guarantee proper operation. Equipped with an air-circulation valve.

OTHER CHARACTERISTICS

SURGE Electronic safety device to protect the LED module and the related ballast compliant with EN 61547. It works in two modes:
- differential mode: surge between power cables and between the phase and neutral.
- common mode: surge between power, L/N and ground cables or between the fixture's body if it is of class II and installed on a metal pole.



Standard version equipped with connector and wire for suspension installation.
The heat dissipation system was designed to allow LED operation at adequate temperatures and guarantee excellent performance/efficiency and long life.

OTHER INFORMATION



UGR <22 **The UGR** (unified glare rating) is an international unified measure developed by the CIE (Commission International de l'Eclairage) to assess the direct glare generated by a lighting system. The European standard regulating the lighting of indoor work places (**UNI-EN 12464-1**) recommends a specific UGR value for different applications ranging between **10 and 30**; **the lower the UGR value, the lower the glare**. The exact value of this index differs by project type because it depends on the position of the luminaires, room characteristics (dimensions, reflections) and on the point of observation of viewers.

LOW FLICKER Product with a very low flicker; uniform light for greater eye protection.

UPON REQUEST

Protective coating recommended for marine environments within 5 km of the sea

Possibility of centralized lighting point control or via **external** presence/lighting sensors (see chapter *Lighting management systems and recommendations*).

The fixture can be equipped with several light dimmers:
- 1-10V (dimmable from 20% to 100%) or DALI dimmable driver
- power line carrier (PLC) remote control
- wireless control system

IP66 IK08

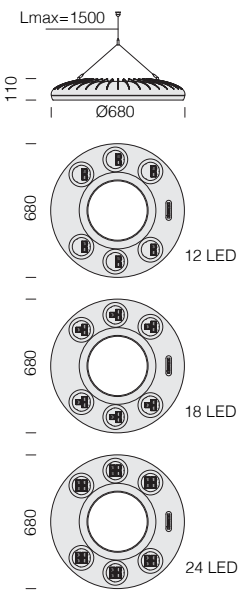

LED: power factor ≥0,9
Luminous flux maintenance 80%: 80.000h (L80B10).



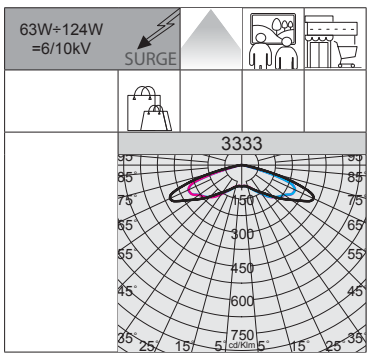

RG0 Ethr | +40 C° -30 | U.V. | LOW FLICKER

3333 Disco 4					
		CLD			LUMEN OUTPUT (tq= 25 °C)
LED	colour	weight	code	W tot	K - ølm 430mA - CRI
LED	grey	10.00	330030-00	63	4000K - 8184lm - CRI 80
			330031-00	93	4000K - 12276lm - CRI 80
		14.00	330032-00	124	4000K - 16368lm - CRI 80
Upon request: possibility to choose different lighting point management systems (see page XX-XXI).					

	Power supply	n.LED	W	ølm
Upon request	530mA	12	**78**	9822lm
		18	**116**	14732lm
		24	**152**	19642lm

IP66 IK08

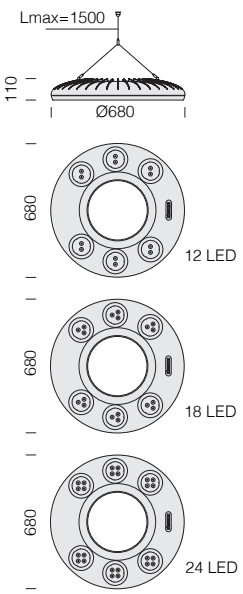

LED: power factor ≥0,9
Luminous flux maintenance 80%: 80.000h (L80B10).



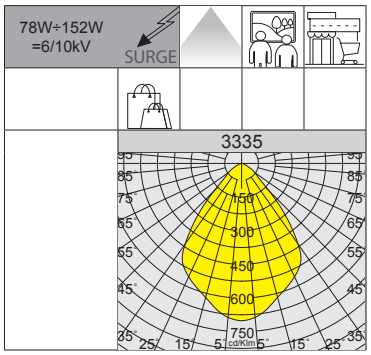

RG0 Ethr | +40 C° -30 | U.V. | LOW FLICKER

3335 Disco 6 - wide beam					
		CLD			LUMEN OUTPUT (tq= 25 °C)
LED	colour	weight	code	W tot	K - ølm 530mA - CRI
LED	grey	10.00	330033-00	78	4000K - 9822lm - CRI 80
			330034-00	116	4000K - 14732lm - CRI 80
		14.00	330035-00	152	4000K - 19642lm - CRI 80
Upon request: possibility to choose different lighting point management systems (see page XX-XXI).					

	Power supply	n.LED	W	ølm
Upon request	430mA	12	**63**	8184lm
		18	**93**	12276lm
		24	**124**	16368lm



GENERAL CHARACTERISTICS

Housing/cover: made of die-cast aluminium.

Diffuser: in transparent, vandal-resistant and V2 self-extinguishing polycarbonate, UV-stabilized.

Coating: the fully automated powder-coating cycle involves a polyester-based, salt-spray corrosion-resistant and UV-stabilised paint.

Upon request: protective coating recommended for marine environments within 5 km of the sea.

Standard supply: automatic temperature control inside the device with automatic resetting. Safety diode to protect against voltage peaks compliant with EN 61547. With dedicated electronic device to protect the LED module. Complete with waterproof connector for quick installation. Art. 1513 supplied with double insulation switch.

LOW FLICKER

Product with a very low flicker; uniform light for greater eye protection.

OTHER CHARACTERISTICS

SURGE

Electronic safety device to protect the LED module and the related ballast compliant with EN 61547. It works in two modes:
- differential mode: surge between power cables and between the phase and neutral.
- common mode: surge between power, L/N and ground cables or between the fixture's body if it is of class II and installed on a metal pole.

3000K 4000K

3000K - 4000K as standard: lamps with 3000K-4000K white light, instead, is the best choice for lighting up urban areas, streets, residential centres and generally all areas where this type of light guarantees greater safety and visual comfort.

CLD PROG

PROG (CLD PROG) AVAILABLE FUNCTIONS

Luminous flux setup	This can be done by programming the drive current values requested when ordering/purchasing the fixture
CLO (Constant Light Output)	The lighting fixture maintains a constant light output throughout its entire service life

LIGHTING POINT MANAGEMENT OPTIONS ON REQUEST

possibility to choose different lighting point management systems according to the system's needs:

1-10V dimming ordered with **sub-code -12**	Adjustment range from 10%-100% with 1-10V
Virtual Midnight order with **subcode -30**	Stand-alone system with automatic luminous flux reduction in **4 steps**. To increase energy savings at night when there are fewer people and vehicles around, a lighting fixture can be programmed according to a specific profile (customizable on request). The fixture reduces its luminous flux through a self-learning process which, depending on the previous switching on and off times, will determine a hypothetical "virtual midnight". This is the average value between the time the fixture is switched on (sunset) and switched off (sunrise). The "virtual midnight" is the reference point for dimming lights according to the desired profile. The device is integrated in the LED driver and therefore does not require any modification to the system. *In order for the system to function correctly, the system must be adjusted by a device that turns the system on and off on a regular basis every day.* ***ATTENTION:*** *original settings and time slots for the "virtual midnight" value can be customized in up to 5 steps upon request.*

Factory settings

Time	Flux
on ÷ 22:00	100%
22:00 ÷ 23:30	75%
23:30 ÷ 02:30	50%
02:30 ÷ 04:00	75%
04:00 ÷ off	100%

PLC remote control ordered with **sub-code -0078**	Point-to-point and system management and diagnosis system

For more information see page XX-XXIII

IP66 IK08

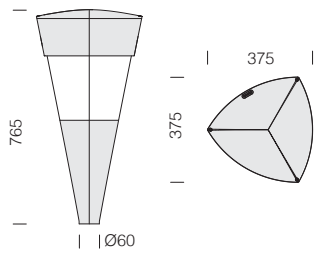

LED: power factor ≥0,92. Luminous flux maintenance:	
80%	90.000h (L80B10)
70%	100.000h (L70B50)

Reflector: made of specular aluminium.



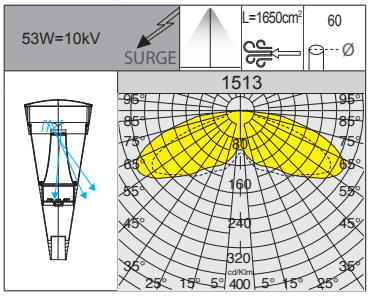

RG0 Ethr

+40 C° -20

U.V.

LOW FLICKER

3000K

4000K

1513 Torcia - COB

		CLD			LUMEN OUTPUT (tq= 25 °C)
LED	colour	weight	code	W tot	K - ølm 1400mA - CRI
COB	grey	7.40	423250-00	**53**	4000K - 5060lm - CRI>80
	graphite		423251-00		
COB	grey	7.40	423250-39	**53**	3000K - 4706lm - CRI>80
	graphite		423251-39		

1513 Torcia - COB - anti-light pollution

		CLD			LUMEN OUTPUT (tq= 25 °C)
LED	colour	weight	code	W tot	K - ølm 1400mA - CRI
COB	grey	7.40	423250-0016	**53**	4000K - 4048lm - CRI>80
	graphite		423251-0016		

IP66 IK08

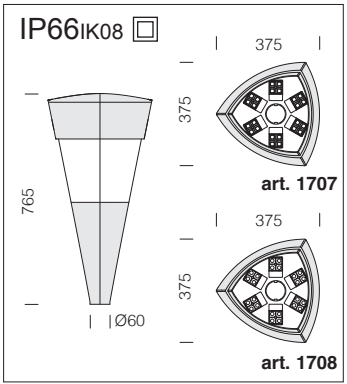

Optics: Optics made of PMMA with high temperature resistance and UV rays.

LED: power factor ≥0.9.
Luminous flux maintenance 90%: 100.000h (L90B10).



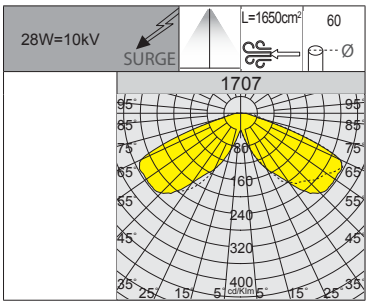

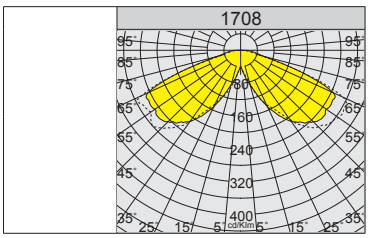

RG0 Ethr

+40 C° -20

U.V.

LOW FLICKER

3000K

4000K

1707 Torcia

		CLD PROG			LUMEN OUTPUT (tq= 25 °C)
LED	colour	weight	code	W tot	K - ølm 400mA - CRI
LED	grey	7.40	423252-00	**28**	4000K - 4750lm - CRI>70
	graphite		423253-00		
LED	grey	7.40	423252-39	**28**	3000K - 4500lm - CRI>70
	graphite		423253-39		

1708 Torcia

		CLD PROG			LUMEN OUTPUT (tq= 25 °C)
LED	colour	weight	code	W tot	K - ølm 400mA - CRI
LED	grey	7.40	423255-00	**28**	4000K - 3890lm - CRI>70
	graphite		423256-00		



GENERAL CHARACTERISTICS

Housing/Frame: in die-cast aluminium.

Optics art. 1583 FX: made of PMMA with high temperature resistance and UV rays.

Reflector: made of satin aluminium.

Coating: the fully automated powder-coating cycle involves a polyester-based, salt-spray corrosion-resistant and UV-stabilised paint.

Upon request: protective coating recommended for marine environments within 5 km of the sea.

Standard supply: safety diode to protect against voltage peaks compliant with EN 61547. With dedicated electronic device to protect the LED module. Waterproof connector for quick installation ; supplied with double insulation switch.

LOW FLICKER

Product with a very low flicker; uniform light for greater eye protection.

OTHER CHARACTERISTICS

SURGE

Electronic safety device to protect the LED module and the related ballast compliant with EN 61547. It works in two modes:
- differential mode: surge between power cables and between the phase and neutral.
- common mode: surge between power, L/N and ground cables or between the fixture's body if it is of class II and installed on a metal pole.

2200K

2200K (subcode -73): lamps with warm amber light at a colour temperature of 2200K reduces the risks of an excessive exposure to harmful blue LED light and allows a "softer" impact on inhabited zones, especially in historic centres.

3000K 4000K

3000K - 4000K as standard: lamps with 3000K-4000K white light, instead, is the best choice for lighting up urban areas, streets, residential centres and generally all areas where this type of light guarantees greater safety and visual comfort.

CLD PROG

PROG (CLD PROG) AVAILABLE FUNCTIONS

Luminous flux setup	This can be done by programming the drive current values requested when ordering/purchasing the fixture
CLO (Constant Light Output)	The lighting fixture maintains a constant light output throughout its entire service life

LIGHTING POINT MANAGEMENT OPTIONS ON REQUEST
possibility to choose different lighting point management systems according to the system's needs:

1-10V dimming ordered with **sub-code -12**	Adjustment range from 10%-100% with 1-10V
Virtual Midnight order with **subcode -30**	Stand-alone system with automatic luminous flux reduction in **4 steps**. To increase energy savings at night when there are fewer people and vehicles around, a lighting fixture can be programmed according to a specific profile (customizable on request). The fixture reduces its luminous flux through a self-learning process which, depending on the previous switching on and off times, will determine a hypothetical "virtual midnight". This is the average value between the time the fixture is switched on (sunset) and switched off (sunrise). The "virtual midnight" is the reference point for dimming lights according to the desired profile. The device is integrated in the LED driver and therefore does not require any modification to the system. *In order for the system to function correctly, the system must be adjusted by a device that turns the system on and off on a regular basis every day.* ***ATTENTION:*** *original settings and time slots for the "virtual midnight" value can be customized in up to 5 steps upon request.*

Factory settings

Time	Flux
on ÷ 22:00	100%
22:00 ÷ 23:30	75%
23:30 ÷ 02:30	50%
02:30 ÷ 04:00	75%
04:00 ÷ off	100%

PLC remote control ordered with **sub-code -0078**	Point-to-point and system management and diagnosis system

For more information see page XX-XXIII

IP65 IK09

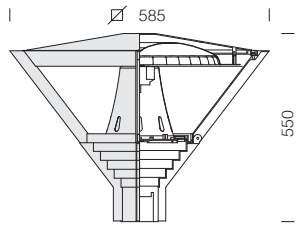

LED: power factor ≥0,92. Luminous flux maintenance:	
80%	90.000h (L80B10)
70%	100.000h (L70B50)



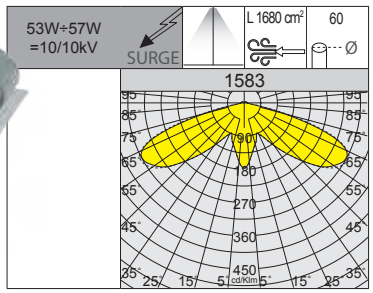

-0016 subocode: anti-light pollution version.

RG0 Ethr | +40 C° -20 | U.V. | LOW FLICKER | 2200K | 3000K | 4000K

1583 Vista

		CLD			LUMEN OUTPUT (tq= 25 °C)
LED	colour	weight	code	W tot	K - ølm 1400mA - CRI
COB	graphite	10.30	422212-00	**53**	4000K - 3700lm - CRI>80
	grey		422213-00		
COB	graphite	10.30	422212-0016	**53**	4000K - 3140lm - CRI>80
	grey		422213-0016		
COB AMBER	graphite	10.30	422212-73	**57**	2200K - 3415lm - **AMBER**
	grey		422213-73		

Note: when ordering, make sure you select the **AMBER LED** type best suited for your lighting design and installation needs.

IP65 IK09

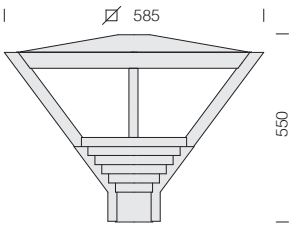

LED: power factor ≥0.9.
Luminous flux maintenance 90%: >100.000h (L90B10).



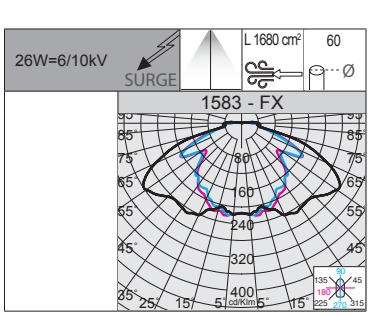

RG0 Ethr | +40 C° -20 | U.V. | LOW FLICKER | 3000K | 4000K

1583 Vista - FX

		CLD PROG			LUMEN OUTPUT (tq= 25 °C)
LED	colour	weight	code	W tot	K - ølm - CRI
LED	graphite	12.40	422304-00	**26**	4000K - 3843lm - CRI 70
			422304-39		3000K - 3591lm - CRI 70



GENERAL CHARACTERISTICS

Housing: made of die-cast aluminium.

Cover: art. 1205 made of turned aluminium; art. 1570 made of die-cast aluminium; art. 1517/1518 made of aluminium plate.

Diffuser: in vandal-resistant V2 self-extinguishing polycarbonate, UV-stabilized.

Coating: the fully automated powder-coating cycle involves a polyester-based, salt-spray corrosion-resistant and UV-stabilised paint.

Upon request: protective coating recommended for marine environments within 5 km of the sea.

Equipment: Automatic temperature control inside the device with automatic resetting. Complete with waterproof connector for quick installation.

RG0 Ethr

+40 C° -20

U.V.

LOW FLICKER

3000K

4000K

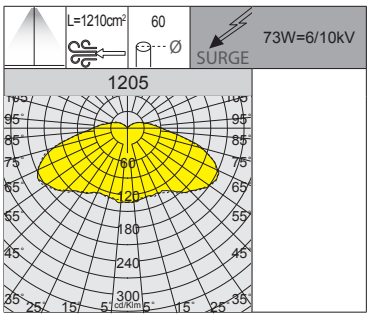



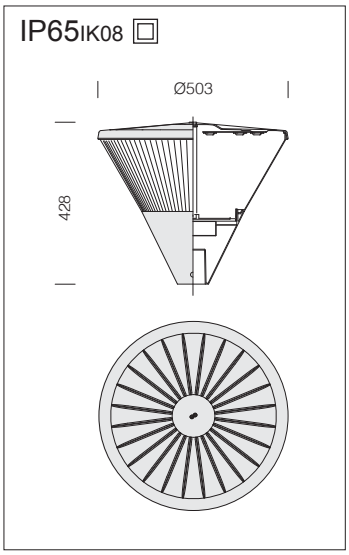

1205 Polar					
		CLD PROG			LUMEN OUTPUT (tq= 25 °C)
LED	colour	weight	code	W tot	K - ølm 500mA - CRI
LED	grey	5.60	422140-00	**73**	4000K - 9188lm - CRI>70
	graphite		422141-00		
LED	grey	5.60	422140-39	**73**	3000K - 8736lm - CRI>70
	graphite		422141-39		
Upon request: possibility to choose different lighting point management systems (see page XX-XXIII).					

LED: power factor ≥0.9.
Luminous flux maintenance 90%: 100.000h (L90B10).

IP65 IK08

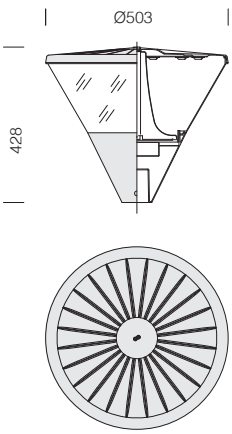

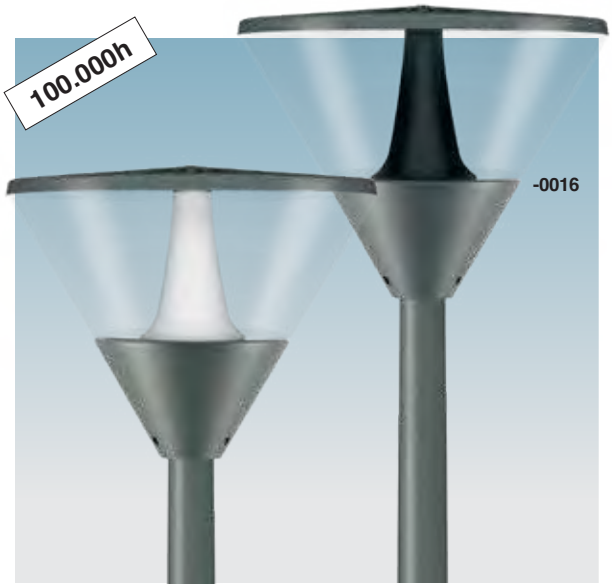

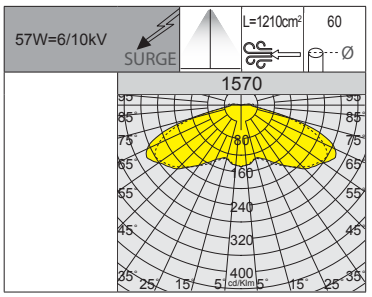

RGO Ethr

+40 C° -20

U.V.

LOW FLICKER

3000K

4000K

LED: power factor ≥0.9.
Luminous flux maintenance 90%: 100.000h (L90B10).

11W version is recommended for poles up to 2 metres tall.

1570 Clima

		CLD PROG			LUMEN OUTPUT (tq= 25 °C)
LED	colour	weight	code	W tot	K - ølm 125mA - CRI
LED	grey	5.90	422403-00	**11**	4000K - 1806lm - CRI 70
	graphite		422404-00		
LED	grey	5.90	422403-39	**11**	3000K - 1701lm - CRI 70
	graphite		422404-39		
					K - ølm 390mA - CRI
LED	grey	6.20	422400-00	**57**	4000K - 8841lm - CRI>70
	graphite		422401-00		
LED	grey	6.20	422400-39	**57**	3000K - 8399lm - CRI 70
	graphite		422401-39		
LED	grey	6.20	422400-0016	**57**	4000K - 8306lm - CRI>70
	graphite		422401-0016		

Upon request: possibility to choose different lighting point management systems (see page XX-XXIII).

IP65 IK08

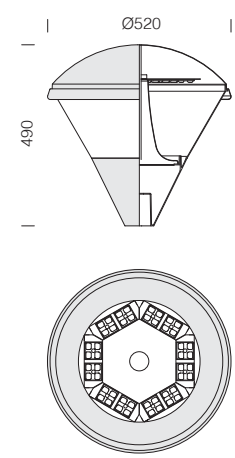



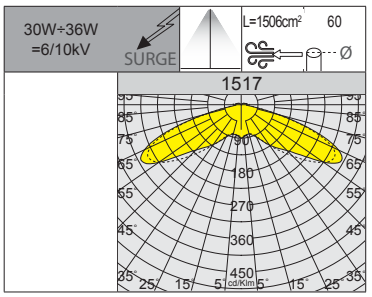

Upon request: other photometric distributions.

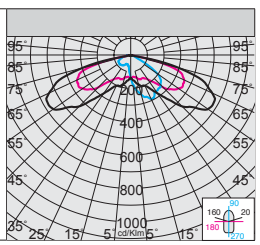

RGO Ethr

+40 C° -20

U.V.

LOW FLICKER

3000K

4000K

LED: power factor ≥0.9.
Luminous flux maintenance 90%: 100.000h (L90B10).

1517 Clima

		CLD PROG			LUMEN OUTPUT (tq= 25 °C)
LED	colour	weight	code	W tot	K - ølm - CRI
LED	grey	5.90	422372-00	**30**	4000K - 4950lm - CRI>70
	graphite		422373-00		
LED	grey	5.90	422372-39	**30**	3000K - 4674lm - CRI>70
	graphite		422373-39		
LED	grey	5.90	422370-00	**36**	4000K - 5834lm - CRI>70
	graphite		422371-00		
LED	grey	5.90	422370-39	**36**	3000K - 5514lm - CRI>70
	graphite		422371-39		

Upon request: possibility to choose different lighting point management systems (see page XX-XXIII).

1518 Clima - anti-light pollution

		CLD PROG			LUMEN OUTPUT (tq= 25 °C)
LED	colour	weight	code	W tot	K - ølm - CRI
LED	grey	5.90	422380-00	**30**	4000K - 4519lm - CRI>70
	graphite		422381-00		

Upon request: possibility to choose different lighting point management systems (see page XX-XXIII).



GENERAL CHARACTERISTICS

Housing: in die-cast aluminium with cooling fins.

Optics: made of PMMA with high temperature resistance and UV rays.

Diffuser: 4mm thick tempered glass, resistant to thermal shocks and impacts (UNI-EN 12150-1: 2001).

Coating: the fully automated powder-coating cycle involves a polyester-based, salt-spray corrosion-resistant and UV-stabilised paint.

Upon request: protective coating recommended for marine environments within 5 km of the sea.

Equipment: the fixture is equipped with air recirculation valve and waterproof connector for quick installation with **no need to open the fixture;** silicone rubber gasket; external screws and bolts in stainless steel. Automatic temperature control inside the device with automatic resetting. With dedicated electronic device to protect the LED module.

OTHER CHARACTERISTICS

SURGE

Electronic safety device to protect the LED module and the related ballast compliant with EN 61547.
It works in two modes:
- differential mode: surge between power cables and between the phase and neutral.
- common mode: surge between power, L/N and ground cables or between the fixture's body if it is of class II and installed on a metal pole.

LOW FLICKER

Product with a very low flicker; uniform light for greater eye protection.

CLD PROG

PROG (CLD PROG) AVAILABLE FUNCTIONS

Luminous flux setup	This can be done by programming the drive current values requested when ordering/purchasing the fixture
CLO (Costant Light Output)	The lighting fixture maintains a constant light output throughout its entire service life

LIGHTING POINT MANAGEMENT OPTIONS ON REQUEST

possibility to choose different lighting point management systems according to the system's needs:

1-10V dimming ordered with **sub-code -12**	Adjustment range from 10%-100% with 1-10V
Virtual Midnight order with **subcode -30**	Stand-alone system with automatic luminous flux reduction in **4 steps**. To increase energy savings at night when there are fewer people and vehicles around, a lighting fixture can be programmed according to a specific profile (customizable on request). The fixture reduces its luminous flux through a self-learning process which, depending on the previous switching on and off times, will determine a hypothetical "virtual midnight". This is the average value between the time the fixture is switched on (sunset) and switched off (sunrise). The "virtual midnight" is the reference point for dimming lights according to the desired profile. The device is integrated in the LED driver and therefore does not require any modification to the system. *In order for the system to function correctly, the system must be adjusted by a device that turns the system on and off on a regular basis every day.* ***ATTENTION:*** *original settings and time slots for the "virtual midnight" value can be customized in up to 5 steps upon request.*

Factory settings

Time	Flux
on ÷ 22:00	100%
22:00 ÷ 23:30	75%
23:30 ÷ 02:30	50%
02:30 ÷ 04:00	75%
04:00 ÷ off	100%

PLC remote control ordered with **sub-code -0078**	Point-to-point and system management and diagnosis system
For more information see page XX-XXIII	



Exemple with Zhaga Socket (subcode -0054)

LUMINAIRE DESIGNED FOR INSTALLATION ON NEMA OR ZHAGA SOCKET: to monitor and manage public lighting centrally, lighting fixtures will always be more equipped with wireless controls that will allow their integration with the IoT. Today the market offers two solutions: **NEMA and ZHAGA**. Both solutions offer an electrical and mechanical connection between the control antenna and the lighting fixture.

Nema Socket order with **subcode -40** (sealing cap to be ordered separately)	Mounted directly on the fixture's body, ideal for remote lighting management applications.
Zhaga Socket order with **subcode -0054** (complete with sealing cap)	

IP66 IK08

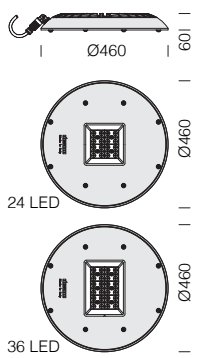

LED: power factor ≥0.9.
Luminous flux maintenance 90%: >100.000h (L90B10).



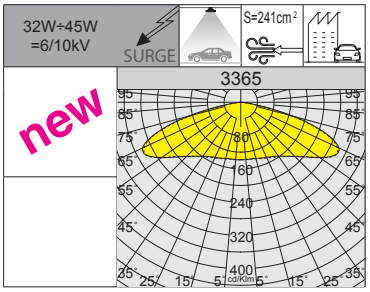

RG0 Ethr
+45 C° -40
U.V.
LOW FLICKER

3365 Iseo - rotosymmetric - centre street						
		CLD PROG				LUMEN OUTPUT (tq= 25 °C)
LED	colour	weight	Ø	code	W tot	K - ølm - CRI
LED	RAL 7021	5.50	460	330585-00	**32**	4000K - **4985lm** - CRI 70
				330587-00	**45**	4000K - **6505lm** - CRI 70

IP66 IK08

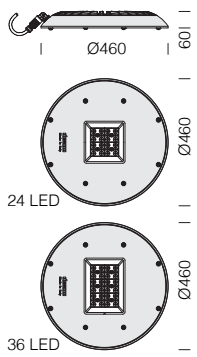

LED: power factor ≥0.9.
Luminous flux maintenance 90%: >100.000h (L90B10).



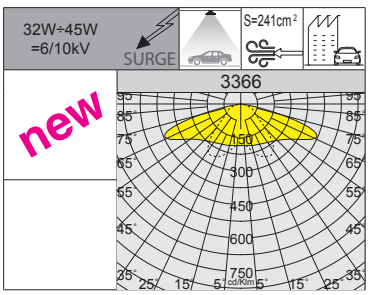

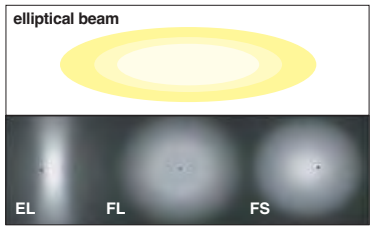

RG0 Ethr
+45 C° -40
U.V.
LOW FLICKER

3366 Iseo - elliptical beam - centre street						
		CLD PROG				LUMEN OUTPUT (tq= 25 °C)
LED	colour	weight	Ø	code	W tot	K - ølm - CRI
LED	RAL 7021	5.50	460	330586-00	**32**	4000K - **5077lm** - CRI 70
				330588-00	**45**	4000K - **6625lm** - CRI 70

ACCESSORIES

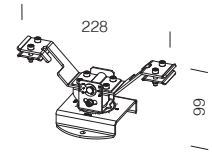

acc. 54 suspension connection

1.00	995774-00

In stainless steel AISI 304. For installation on ropes and steel cables; rotation on the vertical axis of 360°.

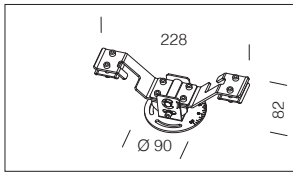

acc. 55 suspension connection

0.90	998098-00

In stainless steel AISI 304. For installation on ropes and steel cables; rotation on the vertical axis of 120°.



GENERAL CHARACTERISTICS

Housing: in die-cast aluminium with cooling fins.

Optics: made of PMMA with high temperature resistance and UV rays.

Diffuser: 4mm thick tempered glass, resistant to thermal shocks and impacts (UNI-EN 12150-1: 2001).

Coating: the fully automated powder-coating cycle involves a polyester-based, salt-spray corrosion-resistant and UV-stabilised paint.

Upon request: protective coating recommended for marine environments within 5 km of the sea.

Equipment: The fixture is equipped with air recirculation valve and waterproof connector for quick installation with **no need to open the fixture;** silicone rubber gasket; external screws and bolts in stainless steel.

OTHER CHARACTERISTICS

SURGE Electronic safety device to protect the LED module and the related ballast compliant with EN 61547.
It works in two modes:
- differential mode: surge between power cables and between the phase and neutral.
- common mode: surge between power, L/N and ground cables or between the fixture's body if it is of class II and installed on a metal pole.

LOW FLICKER Product with a very low flicker; uniform light for greater eye protection.

CLD PROG

PROG (CLD PROG) AVAILABLE FUNCTIONS

Luminous flux setup	This can be done by programming the drive current values requested when ordering/purchasing the fixture
CLO (Costant Light Output)	The lighting fixture maintains a constant light output throughout its entire service life

LIGHTING POINT MANAGEMENT OPTIONS ON REQUEST

possibility to choose different lighting point management systems according to the system's needs:

1-10V dimming ordered with **sub-code -12**	Adjustment range from 10%-100% with 1-10V
Virtual Midnight order with **subcode -30**	Stand-alone system with automatic luminous flux reduction in **4 steps**. To increase energy savings at night when there are fewer people and vehicles around, a lighting fixture can be programmed according to a specific profile (customizable on request). The fixture reduces its luminous flux through a self-learning process which, depending on the previous switching on and off times, will determine a hypothetical "virtual midnight". This is the average value between the time the fixture is switched on (sunset) and switched off (sunrise). The "virtual midnight" is the reference point for dimming lights according to the desired profile. The device is integrated in the LED driver and therefore does not require any modification to the system. *In order for the system to function correctly, the system must be adjusted by a device that turns the system on and off on a regular basis every day.* ***ATTENTION:*** *original settings and time slots for the "virtual midnight" value can be customized in up to 5 steps upon request.*

Factory settings

Time	Flux
on ÷ 22:00	100%
22:00 ÷ 23:30	75%
23:30 ÷ 02:30	50%
02:30 ÷ 04:00	75%
04:00 ÷ off	100%

PLC remote control ordered with **sub-code -0078**	Point-to-point and system management and diagnosis system

For more information see page XX-XXIII

ACCESSORIES

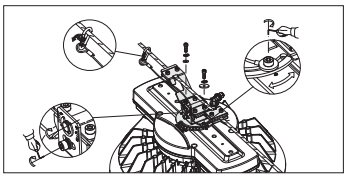

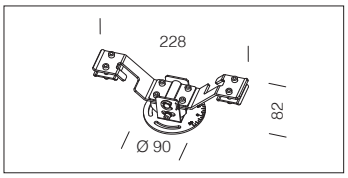

acc. 55 suspension connection	
0.90	998098-00
In stainless steel AISI 304. For installation on ropes and steel cables.	



IP66 IK08

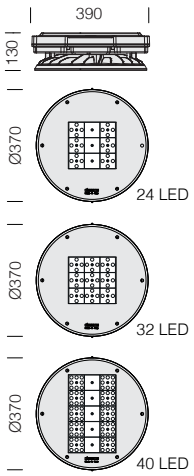



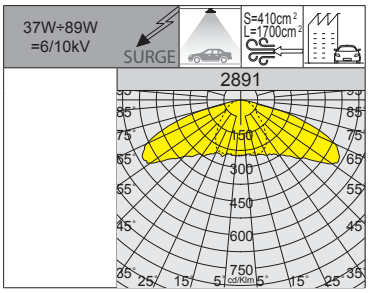

RG0 Ethr

+60 C° -40

U.V.

LOW FLICKER

LED: power factor ≥0.9.
Luminous flux maintenance 90%: >100.000h (L90B10).

2891 Saturno - centre street

		CLD PROG				LUMEN OUTPUT (tq= 25 °C)
LED	colour	weight	Ø	code	W tot	K - ølm - CRI
LED	RAL 7021	6.20	370	330795-00	**37**	4000K - 4939lm - CRI 70
				330796-00	**62**	4000K - 8144lm - CRI 70
				330797-00	**89**	4000K - 11813lm - CRI 70



GENERAL CHARACTERISTICS

Housing: die-cast aluminium.

Diffuser: tempered glass, resistant to thermal shock and impacts (UNI-EN 12150-1 : 2001).

Optics: art. 3142 in high-efficiency, metal-coated V0 polycarbonate, matt finish and micro-facetted to reduce direct glare; art.3146 made of PMMA with high temperature resistance and UV rays

Coating: the fully automated powder-coating cycle involves a polyester-based, salt-spray corrosion-resistant and UV-stabilised paint.

Upon request: protective coating recommended for marine environments within 5 km of the sea.

Equipment: these lighting fixtures also come with an automatic control temperature device, which protects the LEDs from peak current through a protection diode. Safety diode to protect against voltage peaks compliant with EN 61547. With dedicated electronic device to protect the LED module. Supplied with double insulation switch.

OTHER CHARACTERISTICS

SURGE

Electronic safety device to protect the LED module and the related ballast compliant with EN 61547. It works in two modes:
- differential mode: surge between power cables and between the phase and neutral.
- common mode: surge between power, L/N and ground cables or between the fixture's body if it is of class II and installed on a metal pole.

3000K 4000K

3000K - 4000K as standard: lamps with 3000K-4000K white light, instead, is the best choice for lighting up urban areas, streets, residential centres and generally all areas where this type of light guarantees greater safety and visual comfort.

LOW FLICKER

Product with a very low flicker; uniform light for greater eye protection.

CLD PROG

PROG (CLD PROG) AVAILABLE FUNCTIONS

Luminous flux setup	This can be done by programming the drive current values requested when ordering/purchasing the fixture
CLO (Constant Light Output)	The lighting fixture maintains a constant light output throughout its entire service life

LIGHTING POINT MANAGEMENT OPTIONS ON REQUEST

possibility to choose different lighting point management systems according to the system's needs:

1-10V dimming ordered with **sub-code -12**	Adjustment range from 10%-100% with 1-10V
Virtual Midnight order with **subcode -30**	Stand-alone system with automatic luminous flux reduction in **4 steps**. To increase energy savings at night when there are fewer people and vehicles around, a lighting fixture can be programmed according to a specific profile (customizable on request). The fixture reduces its luminous flux through a self-learning process which, depending on the previous switching on and off times, will determine a hypothetical "virtual midnight". This is the average value between the time the fixture is switched on (sunset) and switched off (sunrise). The "virtual midnight" is the reference point for dimming lights according to the desired profile. The device is integrated in the LED driver and therefore does not require any modification to the system. *In order for the system to function correctly, the system must be adjusted by a device that turns the system on and off on a regular basis every day.* ***ATTENTION:*** *original settings and time slots for the "virtual midnight" value can be customized in up to 5 steps upon request.*
Factory settings	
Time / **Flux**	
on ÷ 22:00 — 100%	
22:00 ÷ 23:30 — 75%	
23:30 ÷ 02:30 — 50%	
02:30 ÷ 04:00 — 75%	
04:00 ÷ off — 100%	
PLC remote control ordered with **sub-code -0078**	Point-to-point and system management and diagnosis system
For more information see page XX-XXIII	

ACCESSORIES

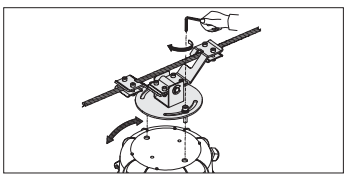

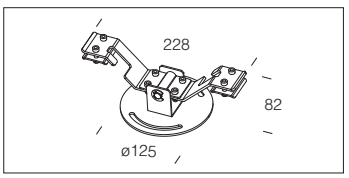

acc. 56 suspension connection	
0.70	995727-00
Made of stainless steel AISI 304. For installation on rope and steel cables.	

IP65 IK08

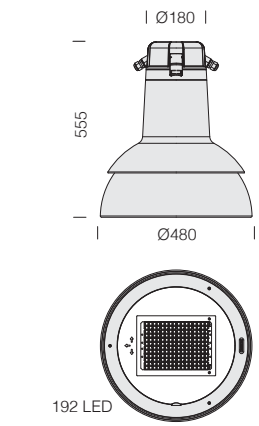



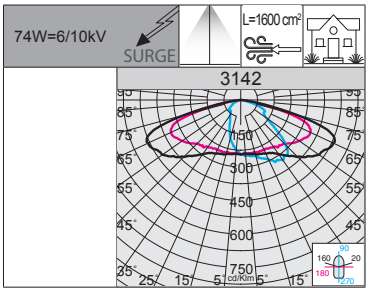



RG0 Ethr
+40 C° -30
U.V.
LOW FLICKER

LED: power factor ≥0.9.
Luminous flux maintenance 80%: 80.000h (L80B20).

3142 Campana

		CLD PROG			LUMEN OUTPUT (tq= 25 °C)
LED	colour	weight	code	W tot	K - ølm - CRI
LED	graphite + white	8.30	326785-00	**74**	4000K - 12505lm - CRI>70

IP65 IK08

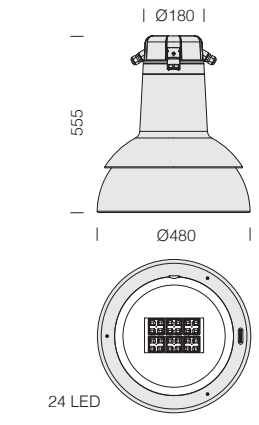

>100.000h



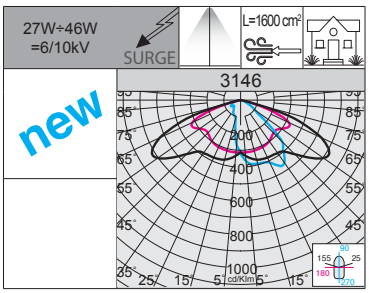



RG0 Ethr
+40 C° -30
U.V.
LOW FLICKER
3000K
4000K

LED: power factor ≥0.9.
Luminous flux maintenance 90%: >100.000h (L90B10).

3146 Campana

		CLD PROG			LUMEN OUTPUT (tq= 25 °C)
LED	colour	weight	code	W tot	K - ølm - CRI
LED	graphite + white	8.30	326790-00	**27**	4000K - **4860lm** - CRI>70
			326790-39		3000K - **4617lm** - CRI>70
LED	graphite + white	8.30	326791-00	**46**	4000K - **8205lm** - CRI>70
			326791-39		3000K - **7795lm** - CRI>70



MINI GIOVI - HP



MINI GIOVI



Mini Giovi p. 508

GIOVI - HP



GIOVI



Giovi p. 520

SELLA 1 - HP



SELLA 1

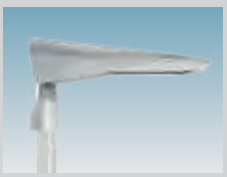

Sella 1 p. 530

SELLA 2 - HP



SELLA 2

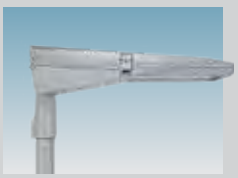

Sella 2 p. 538

MINI STELVIO - HP



MINI STELVIO



Mini Stelvio p. 544

STELVIO - HP



STELVIO



Stelvio p. 548

ROLLE 2.0 - HP

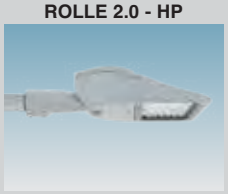

ROLLE 2.0



Rolle 2.0 p. 552

DENIA 1-2



DENIA 3



Denia p. 556

SUSA ME



SUSA T2-T3



Susa p. 568

RESIA



RESIA



Resia p. 572



GENERAL CHARACTERISTICS

Housing and cover: in die-cast aluminium, EN-AB 47100 alloy and designed with a very small surface exposed to wind. Cooling fins integrated in the cover. Once removed, the cover allows accessing the electric gear compartment and power terminal board.

Heat sink: the heat dissipation system is specially designed and made to allow the operation of the LED lights with temperatures ensuring excellent performance/efficiency and durability.

Pole connection: in die-cast aluminium suited for poles with a diameter of min. 46 mm to max. 76 mm, adjustable from -20° to +10° for side-mount applications; and from 0° to +20° for top-mount applications. Tilting angle of 5°.

Diffuser: clear, tempered glass, 4 mm thick, resistant to thermal shock and impacts (UNI-EN 12150-1 : 2001).

Coating: the fully automated powder-coating cycle involves a polyester-based, salt-spray corrosion-resistant and UV-stabilised paint.

OTHER CHARACTERISTICS

Standard supply: complete with waterproof connector for quick installation; air recirculation valve, automatic temperature control inside the device with automatic resetting

SURGE Electronic safety device to protect the LED module and the related ballast compliant with EN 61547.
It works in two modes:
- differential mode: surge between power cables and between the phase and neutral.
- common mode: surge between power, L/N and ground cables or between the fixture's body if it is of class II and installed on a metal pole.

Optical system: the modularity of the optical system, the solutions used for the electronic circuit design and the optimal control of operating temperatures, make the Mini Giovi line a highly professional, flexible and reliable product, capable of guaranteeing huge application advantages in several situations.

OTHER INFORMATION

LOW FLICKER Product with a very low flicker; uniform light for greater eye protection.

The ENEC Plus mark certifies that the LED luminaires are compliant and reliable in terms of safety and declared performance.

The products of the Mini Giovi family are compliant with all applicable tests (third-party certification) pursuant to standard **ANSI C136.31: Street Lighting – Luminaire Vibration.** - Test level: 3.0G Level 2 for bridge/overpass applications.

Registered Design **DM/100271** The International Bureau of the World Intellectual Property Organization (WIPO) hereby certifies that the particulars given below correspond to the recording made in the International Register of Industrial Designs.

UPON REQUEST

Protective coating recommended for marine environments within 5 km of the sea.

CUT-OFF accessory (HP versions excluded): ideal for **blocking backlight and eliminating potential intensity peak behind the light pole**; available in either white or black shades *(NOTE: the black version will block backlight best, while the white version will enable greater efficiency).*



NO BACKLIGHT

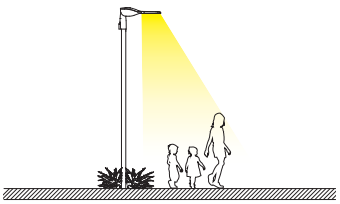

CLD PROG

PROG (CLD PROG) AVAILABLE FUNCTIONS

Luminous flux setup	This can be done by programming the drive current values requested when ordering/purchasing the fixture
CLO (Constant Light Output)	The lighting fixture maintains a constant light output throughout its entire service life

LIGHTING POINT MANAGEMENT OPTIONS ON REQUEST

possibility to choose different lighting point management systems according to the system's needs:

1-10V dimming ordered with **sub-code -12**	Adjustment range from 10%-100% with 1-10V
Virtual Midnight order with **subcode -30**	Stand-alone system with automatic luminous flux reduction in **4 steps**. To increase energy savings at night when there are fewer people and vehicles around, a lighting fixture can be programmed according to a specific profile (customizable on request). The fixture reduces its luminous flux through a self-learning process which, depending on the previous switching on and off times, will determine a hypothetical "virtual midnight". This is the average value between the time the fixture is switched on (sunset) and switched off (sunrise). The "virtual midnight" is the reference point for dimming lights according to the desired profile. The device is integrated in the LED driver and therefore does not require any modification to the system. *In order for the system to function correctly, the system must be adjusted by a device that turns the system on and off on a regular basis every day.* ***ATTENTION:*** *original settings and time slots for the "virtual midnight" value can be customized in up to 5 steps upon request.*
PLC remote control ordered with **sub-code -0078**	Point-to-point and system management and diagnosis system

Factory settings

Time	Flux
on ÷ 22:00	100%
22:00 ÷ 23:30	75%
23:30 ÷ 02:30	50%
02:30 ÷ 04:00	75%
04:00 ÷ off	100%

For more information see page XX-XXIII



Exemple with Zhaga Socket (subcode -0054)

LUMINAIRE DESIGNED FOR INSTALLATION ON NEMA OR ZHAGA SOCKET: to monitor and manage public lighting centrally, lighting fixtures will always be more equipped with wireless controls that will allow their integration with the IoT. Today the market offers two solutions: **NEMA and ZHAGA**. Both solutions offer an electrical and mechanical connection between the control antenna and the lighting fixture.

Nema Socket order with **subcode -40** (sealing cap to be ordered separately)	Mounted directly on the fixture's body, ideal for remote lighting management applications.
Zhaga Socket order with **subcode -0054** (complete with sealing cap)	

The Zhaga-D4i mark certifies the fixture's compliance with Zhaga Book 18 version 2 specifications for outdoor luminaires and DiiA's D4i specifications for intra-luminaire DALI interface.



ACCESSORIES



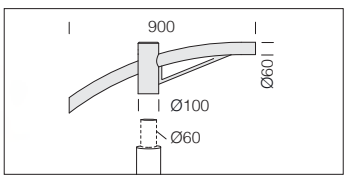

acc. 504 single arm	
RAL 7021	991263-00
Suited for poles with a diameter 60mm.	

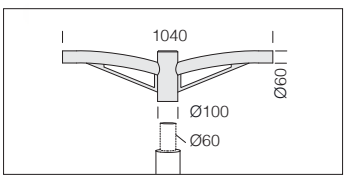

acc. 508 double arm	
RAL 7021	991267-00
Suited for poles with a diameter 60mm.	

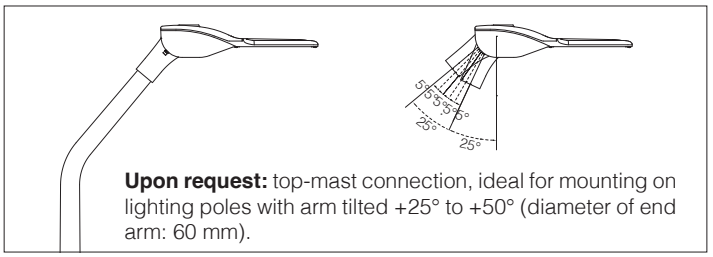

Upon request: top-mast connection, ideal for mounting on lighting poles with arm tilted +25° to +50° (diameter of end arm: 60 mm).

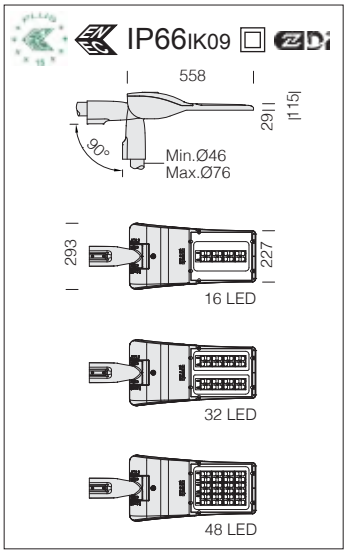



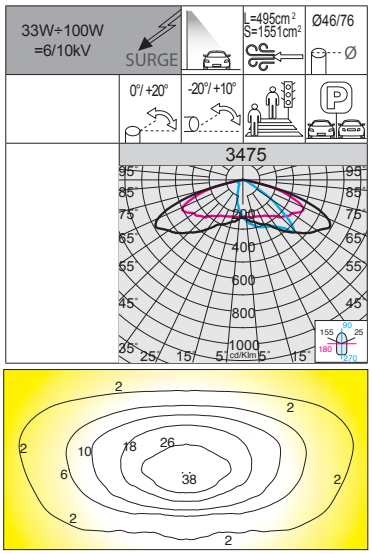

RG0 Ethr

+50 C° -30

U.V.

LOW FLICKER

3000K

4000K

Optics: in PMMA, highly resistant to temperature and UV radiation.

LED: power factor ≥0.9.
Luminous flux maintenance 90%: 100.000h (L90B10).

3475 Mini Giovi W1 - residential amenities

		CLD PROG			LUMEN OUTPUT (tq= 25 °C)
LED	colour	weight	code	W tot	K - ølm - CRI
LED	RAL 7021	5.90	331000-00	**33**	4000K - 5138lm - CRI 70
			331000-39		3000K - 4881lm - CRI 70
LED	RAL 7021	5.90	331001-00	**67**	4000K - 10277lm - CRI 70
			331001-39		3000K - 9764lm - CRI 70
LED	RAL 7021	5.90	331002-00	**100**	4000K - 15417lm - CRI 70
			331002-39		3000K - 14645lm - CRI 70

Example	Power supply	n.LED	W tot	K	ølm
upon request	350mA	16	**16**	**4000K**	2725lm
		32	**33**		5452lm
		48	**50**		8179lm
upon request	530mA	16	**25**	**4000K**	4058lm
		32	**50**		8118lm
		48	**76**		12177lm

n.LED	W tot	K	ølm
16	**16**	**3000K**	2589lm
32	**33**		5180lm
48	**50**		7769lm
16	**25**	**3000K**	3855lm
32	**50**		7712lm
48	**76**		11568lm

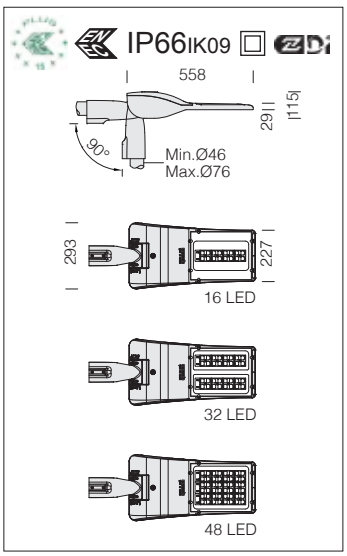



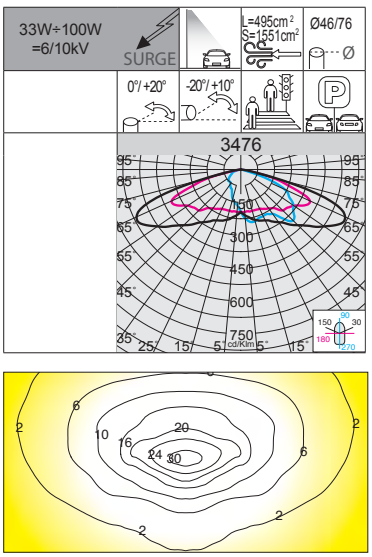

RG0 Ethr

+50 C° -30

U.V.

LOW FLICKER

3000K

4000K

Optics: in PMMA, highly resistant to temperature and UV radiation.

LED: power factor ≥0.9.
Luminous flux maintenance 90%: 100.000h (L90B10).

3476 Mini Giovi W2 - residential amenities

		CLD PROG			LUMEN OUTPUT (tq= 25 °C)
LED	colour	weight	code	W tot	K - ølm - CRI
LED	RAL 7021	5.90	331010-00	**33**	4000K - 5223lm - CRI 70
			331010-39		3000K - 4961lm - CRI 70
LED	RAL 7021	5.90	331011-00	**67**	4000K - 10448lm - CRI 70
			331011-39		3000K - 9925lm - CRI 70
LED	RAL 7021	5.90	331012-00	**100**	4000K - 15674lm - CRI 70
			331012-39		3000K - 14893lm - CRI 70

Example	Power supply	n.LED	W tot	K	ølm
upon request	350mA	16	**16**	**4000K**	2771lm
		32	**33**		5543lm
		48	**50**		8316lm
upon request	530mA	16	**25**	**4000K**	4126lm
		32	**50**		8252lm
		48	**76**		12381lm

n.LED	W tot	K	ølm
16	**16**	**3000K**	2632lm
32	**33**		5265lm
48	**50**		7900lm
16	**25**	**3000K**	3919lm
32	**50**		7840lm
48	**76**		11763lm



RG0
Ethr
+50 C° -30
U.V.
LOW FLICKER
3000K
4000K

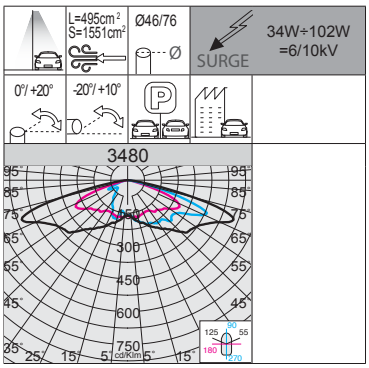



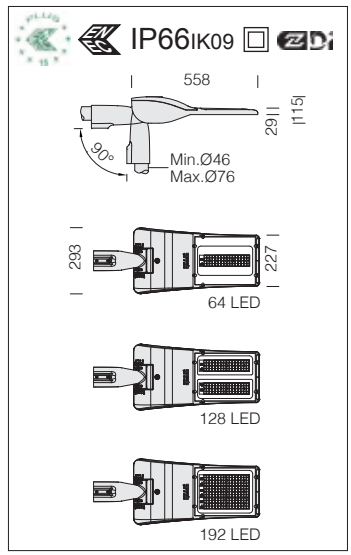

3480 Mini Giovi HP - HIGH PERFORMANCE - large areas					
		CLD PROG			LUMEN OUTPUT (tq= 25 °C)
LED	colour	weight	code	W tot	K - ølm 700mA - CRI
LED	RAL 7021	6.60	331050-00	**34**	4000K - 4916lm - CRI 70
			331050-39		3000K - 4424lm - CRI 70
LED	RAL 7021	6.60	331051-00	**68**	4000K - 9732lm - CRI 70
			331051-39		3000K - 8759lm - CRI 70
LED	RAL 7021	6.60	331052-00	**102**	4000K - 14758lm - CRI 70
			331052-39		3000K - 13282lm - CRI 70

Optics: in PMMA, highly resistant to temperature and UV radiation.

LED: power factor ≥0.9.
Luminous flux maintenance 90%: 100.000h (L90B10).

Example	Power supply	n.LED	W tot	K	ølm
upon request	350mA	64	**16**	**4000K**	2606lm
		128	**32**		5160lm
		192	**49**		7824lm
upon request	530mA	64	**25**	**4000K**	3835lm
		128	**50**		7592lm
		192	**75**		11513lm

n.LED	W tot	K	ølm
64	**16**	**3000K**	2346lm
128	**32**		4644lm
192	**49**		7042lm
64	**25**	**3000K**	3452lm
128	**50**		6833lm
192	**75**		10362lm

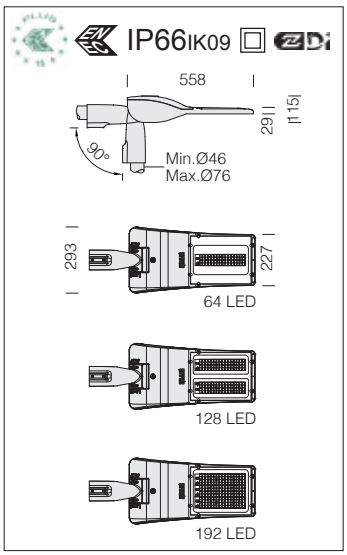



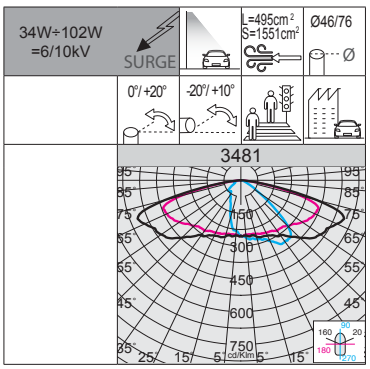

RG0 Ethr

+50 C° -30

U.V.

LOW FLICKER

3000K

4000K

Optics: in PMMA, highly resistant to temperature and UV radiation.

LED: power factor ≥0.9.
Luminous flux maintenance 90%: 100.000h (L90B10).

3481 Mini Giovi HP - HIGH PERFORMANCE - residential amenities ME

		CLD PROG			LUMEN OUTPUT (tq= 25 °C)
LED	colour	weight	code	W tot	K - ølm 700mA - CRI
LED	RAL 7021	6.60	331060-00	**34**	4000K - 5099lm - CRI 70
			331060-39		3000K - 4589lm - CRI 70
LED	RAL 7021	6.60	331061-00	**68**	4000K - 9926lm - CRI 70
			331061-39		3000K - 8933lm - CRI 70
LED	RAL 7021	6.60	331062-00	**102**	4000K - 15246lm - CRI 70
			331062-39		3000K - 13721lm - CRI 70

Example	Power supply	n.LED	W tot	K	ølm
upon request	350mA	64	**16**	**4000K**	2703lm
		128	**32**		5263lm
		192	**49**		8083lm
upon request	530mA	64	**25**	**4000K**	3978lm
		128	**50**		7743lm
		192	**75**		11894lm

n.LED	W tot	K	ølm
64	**16**	**3000K**	2433lm
128	**32**		4736lm
192	**49**		7275lm
64	**25**	**3000K**	3580lm
128	**50**		6969lm
192	**75**		10704lm

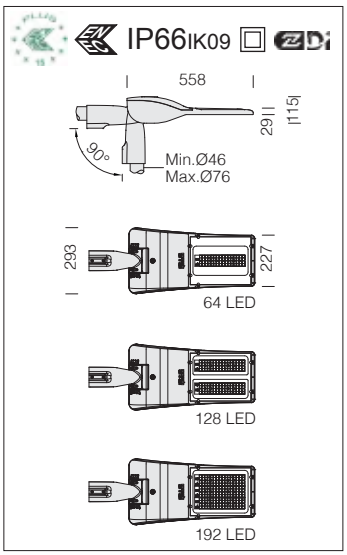



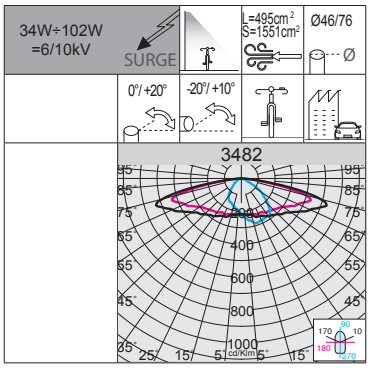

RG0 Ethr

+50 C° -30

U.V.

LOW FLICKER

3000K

4000K

Optics: in PMMA, highly resistant to temperature and UV radiation.

LED: power factor ≥0.9.
Luminous flux maintenance 90%: 100.000h (L90B10).

3482 Mini Giovi HP - HIGH PERFORMANCE - cycleways

		CLD PROG			LUMEN OUTPUT (tq= 25 °C)
LED	colour	weight	code	W tot	K - ølm 700mA - CRI
LED	RAL 7021	6.60	331070-00	**34**	4000K - 4971lm - CRI 70
			331070-39		3000K - 4474lm - CRI 70
LED	RAL 7021	6.60	331071-00	**68**	4000K - 9641lm - CRI 70
			331071-39		3000K - 8677lm - CRI 70
LED	RAL 7021	6.60	331072-00	**102**	4000K - 14911lm - CRI 70
			331072-39		3000K - 13420lm - CRI 70

Example	Power supply	n.LED	W tot	K	ølm
upon request	350mA	64	**16**	**4000K**	2636lm
		128	**32**		5111lm
		192	**49**		7905lm
upon request	530mA	64	**25**	**4000K**	3878lm
		128	**50**		7521lm
		192	**75**		11632lm

n.LED	W tot	K	ølm
64	**16**	**3000K**	2372lm
128	**32**		4600lm
192	**49**		7115lm
64	**25**	**3000K**	3490lm
128	**50**		6769lm
192	**75**		10469lm



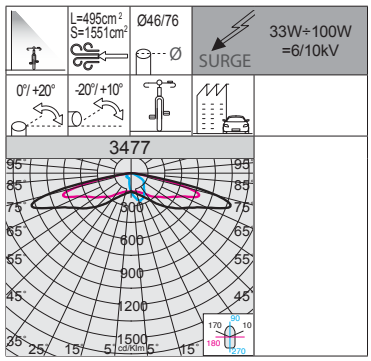

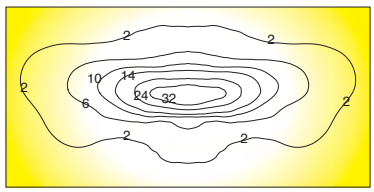



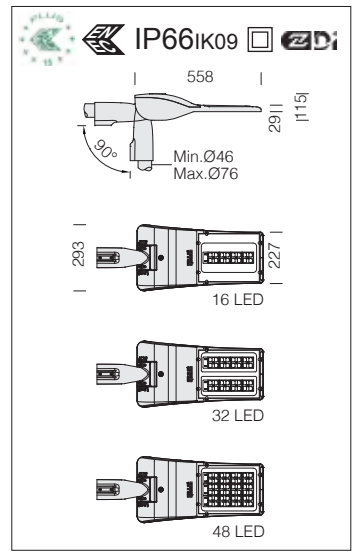

RG0 Ethr · +50 C° -30 · U.V. · LOW FLICKER · 3000K · 4000K

3477 Mini Giovi N1 - cycleways

		CLD PROG			LUMEN OUTPUT (tq= 25 °C)
LED	colour	weight	code	W tot	K - ølm 700mA - CRI
LED	RAL 7021	5.90	331020-00	**33**	4000K - 4991lm - CRI 70
			331020-39		3000K - 4740lm - CRI 70
LED	RAL 7021	5.90	331021-00	**67**	4000K - 9545lm - CRI 70
			331021-39		3000K - 9068lm - CRI 70
LED	RAL 7021	5.90	331022-00	**100**	4000K - 14766lm - CRI 70
			331022-39		3000K - 14026lm - CRI 70

Optics: in PMMA, highly resistant to temperature and UV radiation.

LED: power factor ≥0.9.
Luminous flux maintenance 90%: 100.000h (L90B10).

Example	Power supply	n.LED	W tot	K	ølm
upon request	350mA	16	**16**	**4000K**	2663lm
		32	**33**		5093lm
		48	**50**		7879lm
upon request	530mA	16	**25**	**4000K**	3893lm
		32	**50**		7539lm
		48	**76**		11517lm

n.LED	W tot	K	ølm
16	**16**	**3000K**	2530lm
32	**33**		4838lm
48	**50**		7485lm
16	**25**	**3000K**	3697lm
32	**50**		7162lm
48	**76**		10941lm

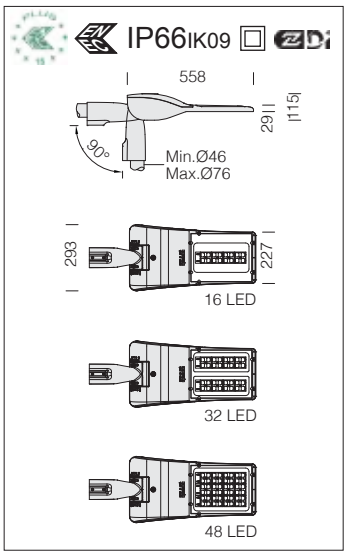



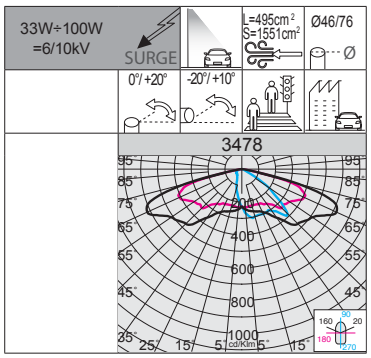

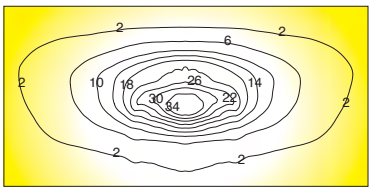

RG0 Ethr

+50 C° -30

U.V.

LOW FLICKER

3000K

4000K

Optics: in PMMA, highly resistant to temperature and UV radiation.

LED: power factor ≥0.9.
Luminous flux maintenance 90%: 100.000h (L90B10).

3478 Mini Giovi M1 - residential amenities

		CLD PROG			LUMEN OUTPUT (tq= 25 °C)
LED	colour	weight	code	W tot	K - ølm 700mA - CRI
LED	RAL 7021	5.90	331030-00	**33**	4000K - 5305lm - CRI 70
			331030-39		3000K - 5039lm - CRI 70
LED	RAL 7021	5.90	331031-00	**67**	4000K - 10522lm - CRI 70
			331031-39		3000K - 9996lm - CRI 70
LED	RAL 7021	5.90	331032-00	**100**	4000K - 15915lm - CRI 70
			331032-39		3000K - 14645lm - CRI 70

Example	Power supply	n.LED	W tot	K	ølm
upon request	350mA	16	**16**	**4000K**	2814lm
		32	**33**		5582lm
		48	**50**		8443lm
upon request	530mA	16	**25**	**4000K**	4191lm
		32	**50**		8312lm
		48	**76**		12571lm

n.LED	W tot	K	ølm
16	**16**	**3000K**	2674lm
32	**33**		5303lm
48	**50**		7769lm
16	**25**	**3000K**	3980lm
32	**50**		7896lm
48	**76**		11568lm

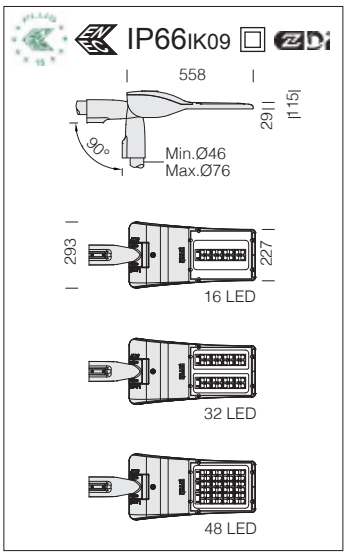

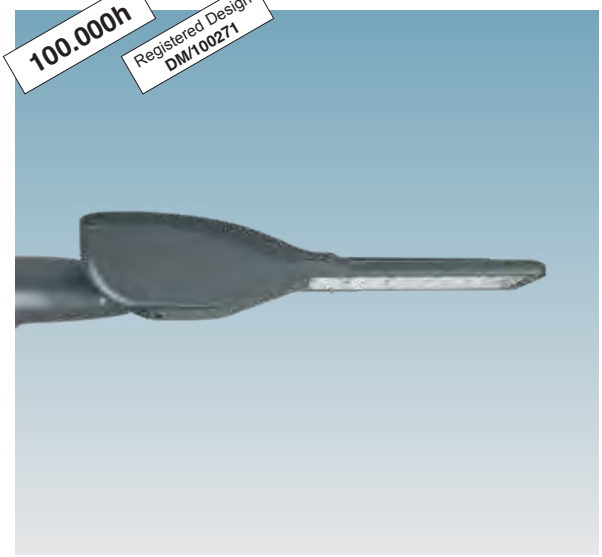

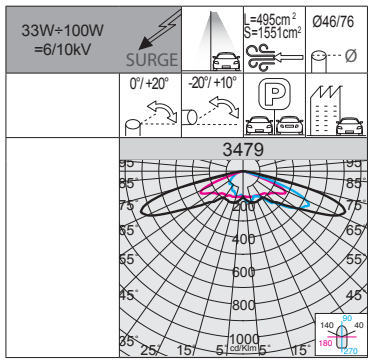

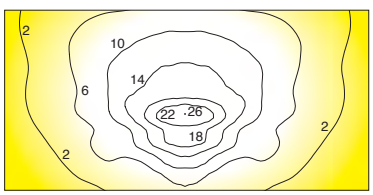

RG0 Ethr

+50 C° -30

U.V.

LOW FLICKER

3000K

4000K

Optics: in PMMA, highly resistant to temperature and UV radiation.

LED: power factor ≥0.9.
Luminous flux maintenance 90%: 100.000h (L90B10).

3479 Mini Giovi T4 - large areas

		CLD PROG			LUMEN OUTPUT (tq= 25 °C)
LED	colour	weight	code	W tot	K - ølm 700mA - CRI
LED	RAL 7021	5.90	331040-00	**33**	4000K - 5257lm - CRI 70
			331040-39		3000K - 4993lm - CRI 70
LED	RAL 7021	5.90	331041-00	**67**	4000K - 10512lm - CRI 70
			331041-39		3000K - 9987lm - CRI 70
LED	RAL 7021	5.90	331042-00	**100**	4000K - 15769lm - CRI 70
			331042-39		3000K - 14981lm - CRI 70

Example	Power supply	n.LED	W tot	K	ølm
upon request	350mA	16	**16**	**4000K**	2789lm
		32	**33**		5576lm
		48	**50**		8365lm
upon request	530mA	16	**25**	**4000K**	4153lm
		32	**50**		8303lm
		48	**76**		12456lm

n.LED	W tot	K	ølm
16	**16**	**3000K**	2648lm
32	**33**		5298lm
48	**50**		7948lm
16	**25**	**3000K**	3944lm
32	**50**		7888lm
48	**76**		11834lm



Examples of installation of Mini Giovi at pedestrian crossings

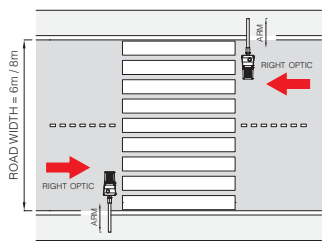

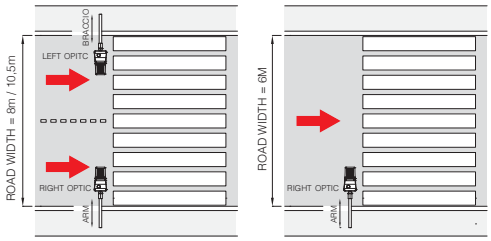

EXAMPLE OF INSTALLATION ON TWO-WAY ROADS

POLE HEIGHT H=6m							
road width	tot. wattage	extension	road lumin. class	pedestrian lumin. class	ev min. richiesto	ev min.	fixtures arrangement
6m	33W	0m	M5	EV3	10lux	12lux	R - R
6m	67W	1,25m	M3-M4	EV2	30lux	34lux	
8m	100W	1,25m				46lux	

EXAMPLE OF INSTALLATION ON ONE-WAY ROADS

POLE HEIGHT H=6m							
road width	tot. wattage	extension	road lumin. class	pedestrian lumin. class	ev min. richiesto	ev min.	fixtures arrangement
6m	67W	1,25m	M5	EV3	10lux	16lux	R
6m	67W	0m	M3-M4	EV2	30lux	46lux	R - L
8m	100W	0m				37lux	
10,5m	67W	0m				39lux	
10,5m	100W	0m	M2	EVv1	50lux	58lux	

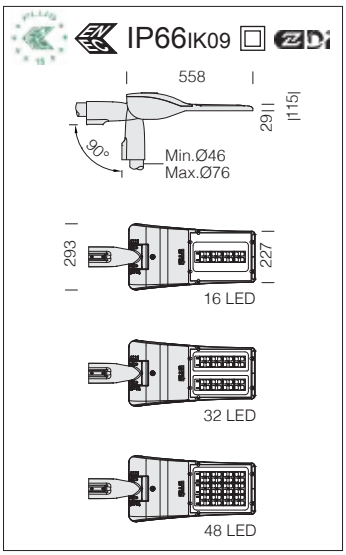

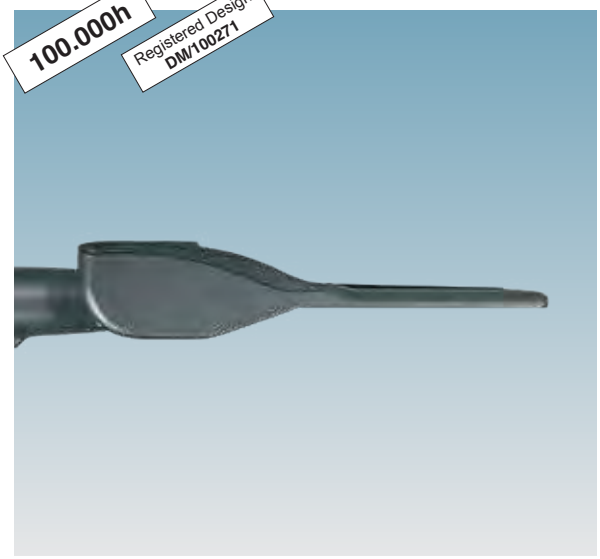

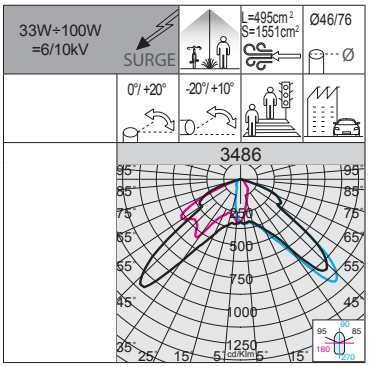

RG0 Ethr

+50 C° -30

U.V.

LOW FLICKER

3000K

4000K

Optics: in PMMA, highly resistant to temperature and UV radiation.

LED: power factor ≥0.9.
Luminous flux maintenance 90%: 100.000h (L90B10).

3486 Mini Giovi left (L) - for pedestrian crossing

		CLD PROG			LUMEN OUTPUT (tq= 25 °C)
LED	colour	weight	code	W tot	K - ølm 700mA - CRI
LED	RAL 7021	6.60	331080-00	**33**	4000K - 5337lm - CRI 70
			331080-39		3000K - 5070lm - CRI 70
LED	RAL 7021	6.60	331081-00	**67**	4000K - 10673lm - CRI 70
			331081-39		3000K - 10140lm - CRI 70
LED	RAL 7021	6.60	331082-00	**100**	4000K - 16010lm - CRI 70
			331082-39		3000K - 15210lm - CRI 70

Example	Power supply	n.LED	W tot	K	ølm
upon request	350mA	16	**16**	**4000K**	2847lm
		32	**33**		5696lm
		48	**50**		8543lm
upon request	530mA	16	**25**	**4000K**	4163lm
		32	**50**		8325lm
		48	**76**		12488lm

n.LED	W tot	K	ølm
16	**16**	**3000K**	2705lm
32	**33**		5411lm
48	**50**		8116lm
16	**25**	**3000K**	3955lm
32	**50**		7909lm
48	**76**		11863lm

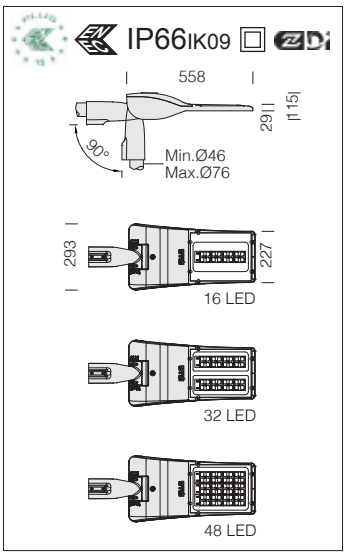

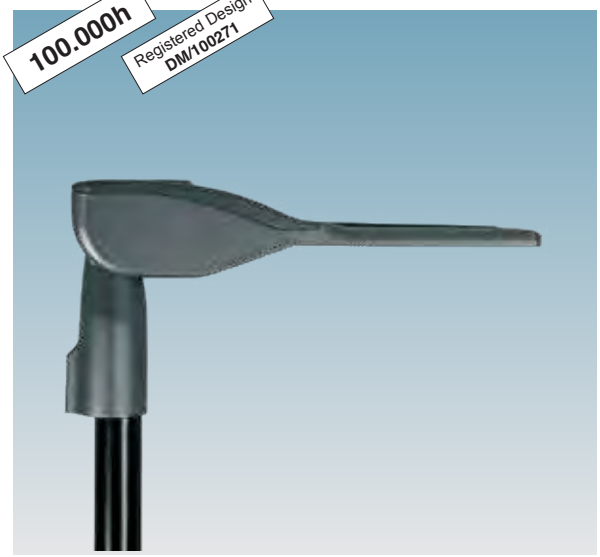

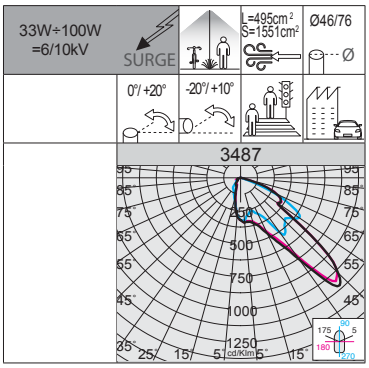

RG0 Ethr

+50 C° -30

U.V.

LOW FLICKER

3000K

4000K

Optics: in PMMA, highly resistant to temperature and UV radiation.

LED: power factor ≥0.9.
Luminous flux maintenance 90%: 100.000h (L90B10).

3487 Mini Giovi right (R) - for pedestrian crossing

		CLD PROG			LUMEN OUTPUT (tq= 25 °C)
LED	colour	weight	code	W tot	K - ølm 700mA - CRI
LED	RAL 7021	5.90	331090-00	**33**	4000K - 5337lm - CRI 70
			331090-39		3000K - 5070lm - CRI 70
LED	RAL 7021	6.20	331091-00	**67**	4000K - 10673lm - CRI 70
			331091-39		3000K - 10140lm - CRI 70
LED	RAL 7021	6.60	331092-00	**100**	4000K - 16010lm - CRI 70
			331092-39		3000K - 15210lm - CRI 70

Example	Power supply	n.LED	W tot	K	ølm
upon request	350mA	16	**16**	**4000K**	2847lm
		32	**33**		5696lm
		48	**50**		8543lm
upon request	530mA	16	**25**	**4000K**	4163lm
		32	**50**		8325lm
		48	**76**		12488lm

n.LED	W tot	K	ølm
16	**16**	**3000K**	2705lm
32	**33**		5411lm
48	**50**		8116lm
16	**25**	**3000K**	3955lm
32	**50**		7909lm
48	**76**		11863lm



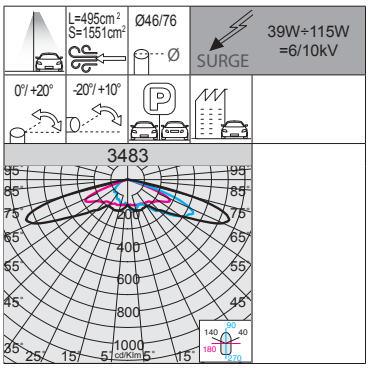

1750K: lamps with warm light at a colour temperature of 1750K are ideal for particularly dangerous areas (pedestrian crossings, entries, roundabouts, etc.) and to minimize the lighting's impact on the environment and on the fauna of green urban areas.

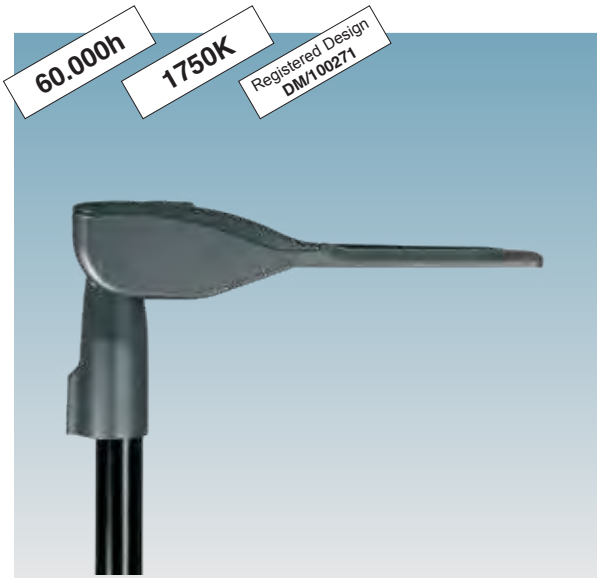

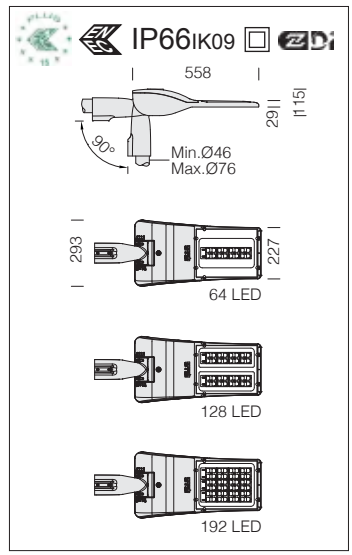

3483 Mini Giovi AMBER - large areas					
		CLD PROG			LUMEN OUTPUT (tq= 25 °C)
LED	colour	weight	code	W tot	K - ølm 200mA - CRI
LED	RAL 7021	6.60	331050-44	**39**	1750K - 3641lm - **AMBER**
		6.60	331051-44	**77**	1750K - 6896lm - **AMBER**
		6.60	331052-44	**115**	1750K - 10422lm - **AMBER**

Optics: in PMMA, highly resistant to temperature and UV radiation.

LED: power factor ≥0.9.
Luminous flux maintenance 80%: 60.000h (L80B10).

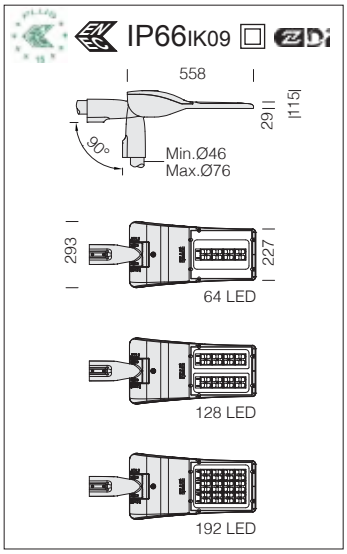

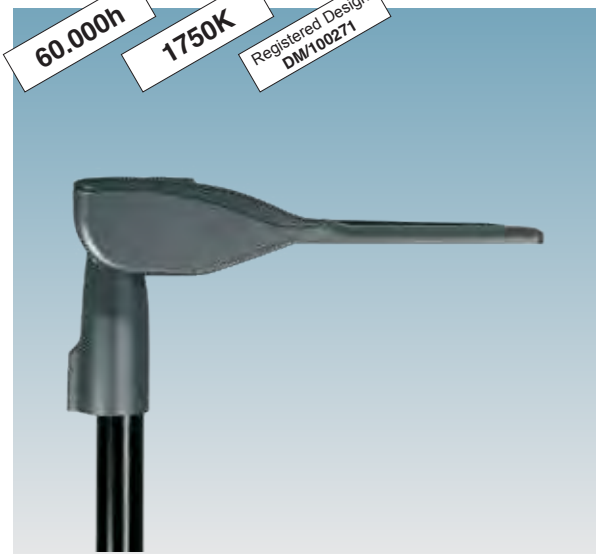

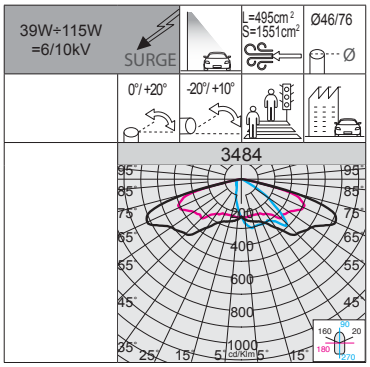

1750K: lamps with warm light at a colour temperature of 1750K are ideal for particularly dangerous areas (pedestrian crossings, entries, roundabouts, etc.) and to minimize the lighting's impact on the environment and on the fauna of green urban areas.

Optics: in PMMA, highly resistant to temperature and UV radiation.

LED: power factor ≥0.9.
Luminous flux maintenance 80%: 60.000h (L80B10).

3484 Mini Giovi AMBER - residential amenities ME

		CLD PROG			LUMEN OUTPUT (tq= 25 °C)
LED	colour	weight	code	W tot	K - ølm 200mA - CRI
LED	RAL 7021	6.60	331060-44	**39**	1750K - 3825lm - **AMBER**
		6.60	331061-44	**77**	1750K - 7244lm - **AMBER**
		6.60	331062-44	**115**	1750K - 10948lm - **AMBER**

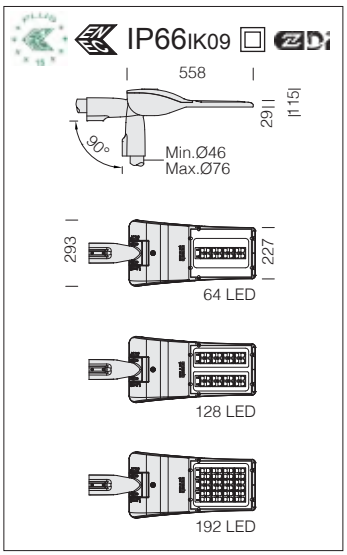

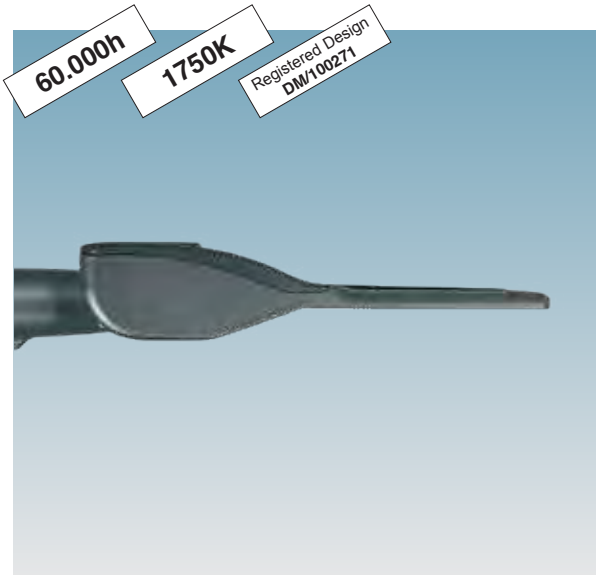

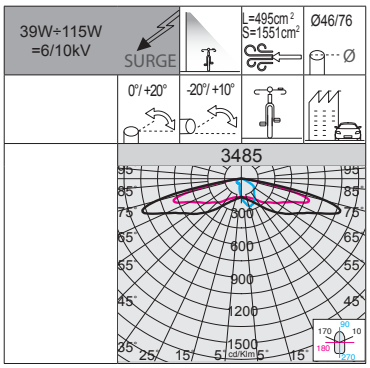

1750K: lamps with warm light at a colour temperature of 1750K are ideal for particularly dangerous areas (pedestrian crossings, entries, roundabouts, etc.) and to minimize the lighting's impact on the environment and on the fauna of green urban areas.

Optics: in PMMA, highly resistant to temperature and UV radiation.

LED: power factor ≥0.9.
Luminous flux maintenance 80%: 60.000h (L80B10).

3485 Mini Giovi AMBER - cycleways

		CLD PROG			LUMEN OUTPUT (tq= 25 °C)
LED	colour	weight	code	W tot	K - ølm 200mA - CRI
LED	RAL 7021	6.60	331070-44	**39**	1750K - 3653lm - **AMBER**
		6.60	331071-44	**77**	1750K - 6920lm - **AMBER**
		6.60	331072-44	**115**	1750K - 10457lm - **AMBER**



GENERAL CHARACTERISTICS

Housing and cover: in die-cast aluminium, EN-AB 47100 alloy and designed with a very small surface exposed to wind. Cooling fins integrated in the cover. Once removed, the cover allows accessing the electric gear compartment and power terminal board.

Heat sink: the heat dissipation system is specially designed and made to allow the operation of the LED lights with temperatures ensuring excellent performance/efficiency and durability.

Pole connection: in die-cast aluminium suited for poles with a diameter of min. 46 mm to max. 76 mm, adjustable from -20° to +10° for side-mount applications; and from 0° to +20° for top-mount applications. Tilting angle of 5°.

Diffuser: clear, tempered glass, 4 mm thick, resistant to thermal shock and impacts (UNI-EN 12150-1 : 2001).

Coating: the fully automated powder-coating cycle involves a polyester-based, salt-spray corrosion-resistant and UV-stabilised paint.

OTHER CHARACTERISTICS

Standard supply: complete with waterproof connector for quick installation; air recirculation valve, automatic temperature control inside the device with automatic resetting

SURGE Electronic safety device to protect the LED module and the related ballast compliant with EN 61547.
It works in two modes:
- differential mode: surge between power cables and between the phase and neutral.
- common mode: surge between power, L/N and ground cables or between the fixture's body if it is of class II and installed on a metal pole.

Optical system: the modularity of the optical system, the solutions used for the electronic circuit design and the optimal control of operating temperatures, make the Giovi line a highly professional, flexible and reliable product, capable of guaranteeing huge application advantages in several situations.

OTHER INFORMATION

LOW FLICKER Product with a very low flicker; uniform light for greater eye protection.

The ENEC Plus mark certifies that the LED luminaires are compliant and reliable in terms of safety and declared performance.

The products of the Giovi family are compliant with all applicable tests (third-party certification) pursuant to standard **ANSI C136.31: Street Lighting – Luminaire Vibration.** - Test level: 3.0G Level 2 for bridge/overpass applications.

Registered Design **DM/100271** The International Bureau of the World Intellectual Property Organization (WIPO) hereby certifies that the particulars given below correspond to the recording made in the International Register of Industrial Designs.

UPON REQUEST

Protective coating recommended for marine environments within 5 km of the sea.

CUT-OFF accessory (HP versions excluded): ideal for **blocking backlight and eliminating potential intensity peak behind the light pole**; available in either white or black shades *(NOTE: the black version will block backlight best, while the white version will enable greater efficiency).*



NO BACKLIGHT

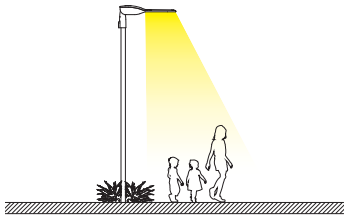

CLD PROG

PROG (CLD PROG) AVAILABLE FUNCTIONS

Luminous flux setup	This can be done by programming the drive current values requested when ordering/purchasing the fixture
CLO (Constant Light Output)	The lighting fixture maintains a constant light output throughout its entire service life

LIGHTING POINT MANAGEMENT OPTIONS ON REQUEST

possibility to choose different lighting point management systems according to the system's needs:

1-10V dimming ordered with **sub-code -12**	Adjustment range from 10%-100% with 1-10V
Virtual Midnight order with **subcode -30**	Stand-alone system with automatic luminous flux reduction in **4 steps**. To increase energy savings at night when there are fewer people and vehicles around, a lighting fixture can be programmed according to a specific profile (customizable on request). The fixture reduces its luminous flux through a self-learning process which, depending on the previous switching on and off times, will determine a hypothetical "virtual midnight". This is the average value between the time the fixture is switched on (sunset) and switched off (sunrise). The "virtual midnight" is the reference point for dimming lights according to the desired profile. The device is integrated in the LED driver and therefore does not require any modification to the system. *In order for the system to function correctly, the system must be adjusted by a device that turns the system on and off on a regular basis every day.* ***ATTENTION:*** *original settings and time slots for the "virtual midnight" value can be customized in up to 5 steps upon request.*

Factory settings

Time	Flux
on ÷ 22:00	100%
22:00 ÷ 23:30	75%
23:30 ÷ 02:30	50%
02:30 ÷ 04:00	75%
04:00 ÷ off	100%

PLC remote control ordered with **sub-code -0078**	Point-to-point and system management and diagnosis system

For more information see page XX-XXI



Exemple with Zhaga Socket (subcode -0054)

LUMINAIRE DESIGNED FOR INSTALLATION ON NEMA OR ZHAGA SOCKET: to monitor and manage public lighting centrally, lighting fixtures will always be more equipped with wireless controls that will allow their integration with the IoT. Today the market offers two solutions: **NEMA and ZHAGA**. Both solutions offer an electrical and mechanical connection between the control antenna and the lighting fixture.

Nema Socket order with **subcode -40** (sealing cap to be ordered separately)	Mounted directly on the fixture's body, ideal for remote lighting management applications.
Zhaga Socket order with **subcode -0054** (complete with sealing cap)	

The Zhaga-D4i mark certifies the fixture's compliance with Zhaga Book 18 version 2 specifications for outdoor luminaires and DiiA's D4i specifications for intra-luminaire DALI interface.



ACCESSORIES

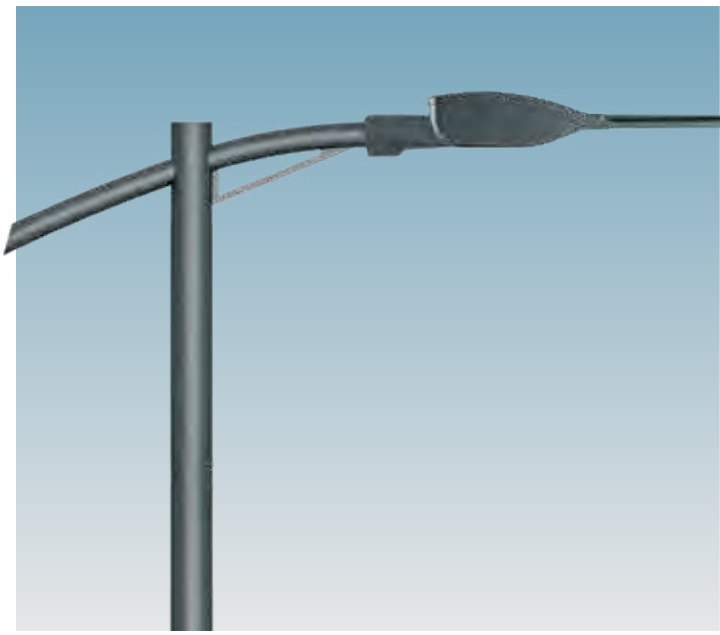

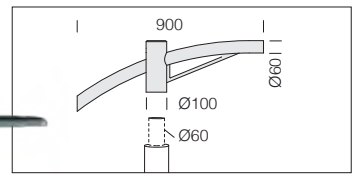

acc. 504 single arm	
RAL 7021	991263-00
Suited for poles with a diameter 60mm.	

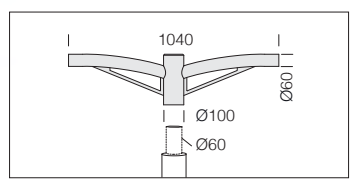

acc. 508 double arm	
RAL 7021	991267-00
Suited for poles with a diameter 60mm.	

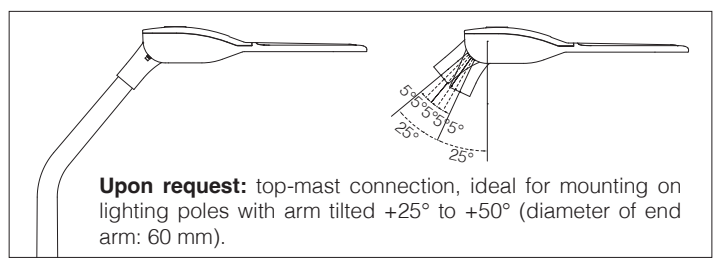

Upon request: top-mast connection, ideal for mounting on lighting poles with arm tilted +25° to +50° (diameter of end arm: 60 mm).

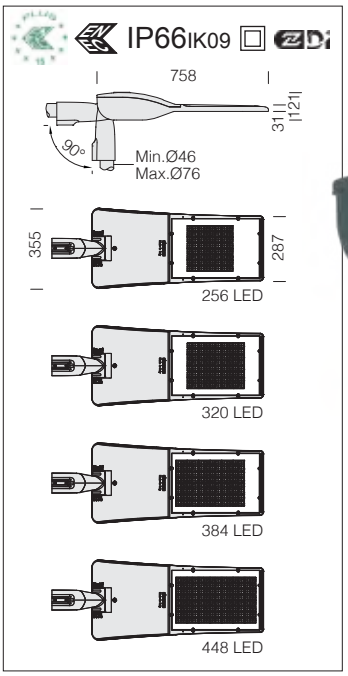

Optics: in PMMA, highly resistant to temperature and UV radiation.

LED: power factor ≥0.9.
Luminous flux maintenance 90%: 100.000h (L90B10).

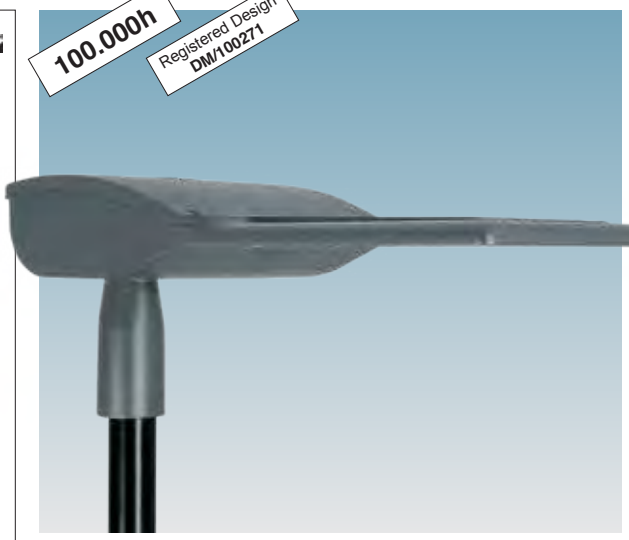

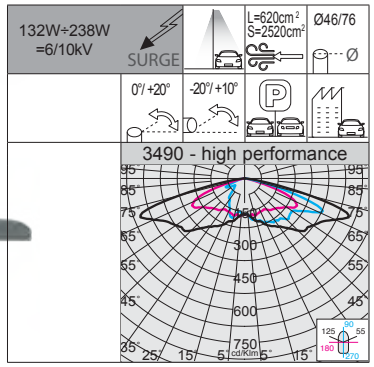

RG0 Ethr
+50 C° -30
U.V.
LOW FLICKER
3000K
4000K

3490 Giovi HP - HIGH PERFORMANCE - large areas

		CLD PROG			LUMEN OUTPUT (tq= 25 °C)
LED	colour	weight	code	W tot	K - ølm 700mA - CRI
LED	RAL 7021	8.90	341040-00	**132**	4000K - 19080lm - CRI 70
			341040-39		3000K - 17172lm - CRI 70
LED	RAL 7021	8.90	341041-00	**170**	4000K - 24627lm - CRI 70
			341041-39		3000K - 22164lm - CRI 70
LED	RAL 7021	8.90	341042-00	**204**	4000K - 29348lm - CRI 70
			341042-39		3000K - 26413lm - CRI 70
LED	RAL 7021	10.50	341043-00	**238**	4000K - 33856lm - CRI 70
			341043-39		3000K - 30470lm - CRI 70

Example	Power supply	n.LED	W tot	K	ølm
upon request	350mA	256	**65**	4000K	10116lm
		320	**82**		13057lm
		384	**99**		15560lm
		448	**116**		17950lm

n.LED	W tot	K	ølm
256	**65**	3000K	9104lm
320	**82**		11751lm
384	**99**		14004lm
448	**116**		16155lm

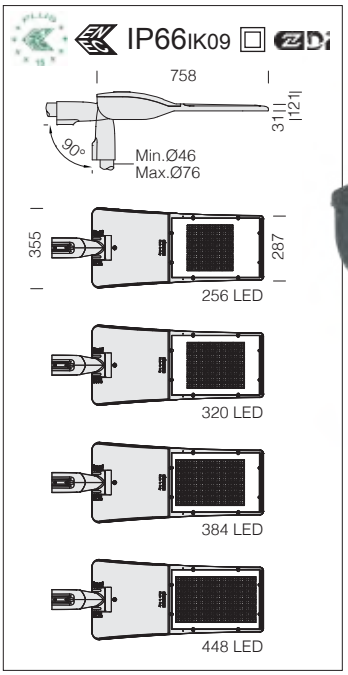

Optics: in PMMA, highly resistant to temperature and UV radiation.

LED: power factor ≥0.9.
Luminous flux maintenance 90%: 100.000h (L90B10).

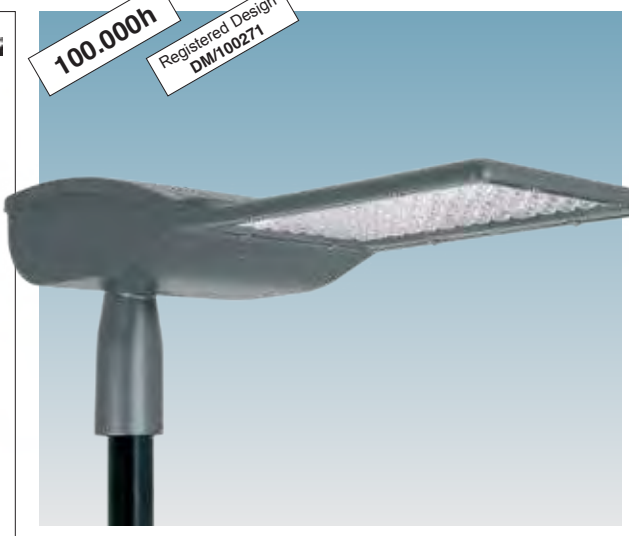

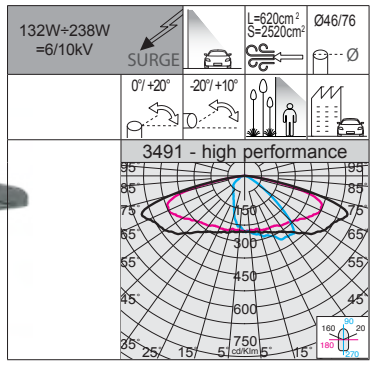

RG0 Ethr
+50 C° -30
U.V.
LOW FLICKER
3000K
4000K

3491 Giovi HP - HIGH PERFORMANCE - residential amenities ME

		CLD PROG			LUMEN OUTPUT (tq= 25 °C)
LED	colour	weight	code	W tot	K - ølm 700mA - CRI
LED	RAL 7021	8.90	341050-00	**132**	4000K - 19799lm - CRI 70
			341050-39		3000K - 17819lm - CRI 70
LED	RAL 7021	8.90	341051-00	**170**	4000K - 25554lm - CRI 70
			341051-39		3000K - 22999lm - CRI 70
LED	RAL 7021	8.90	341052-00	**204**	4000K - 30379lm - CRI 70
			341052-39		3000K - 27341lm - CRI 70
LED	RAL 7021	10.50	341053-00	**238**	4000K - 35076lm - CRI 70
			341053-39		3000K - 31568lm - CRI 70

Example	Power supply	n.LED	W tot	K	ølm
upon request	350mA	256	**65**	4000K	10497lm
		320	**82**		13548lm
		384	**99**		16106lm
		448	**116**		18597lm
upon request	530mA	256	**99**	4000K	15445lm
		320	**125**		19935lm
		384	**151**		23699lm
		448	**177**		27363lm

n.LED	W tot	K	ølm
256	**65**	3000K	9447lm
320	**82**		12193lm
384	**99**		14496lm
448	**116**		16737lm
256	**99**	3000K	13901lm
320	**125**		17942lm
384	**151**		21329lm
448	**177**		24627lm

RG0 Ethr | +50 C° -30 | U.V. | LOW FLICKER | 3000K | 4000K

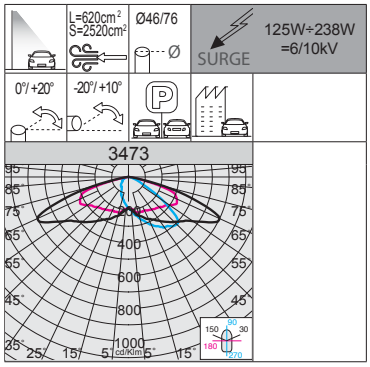

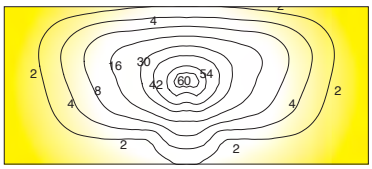



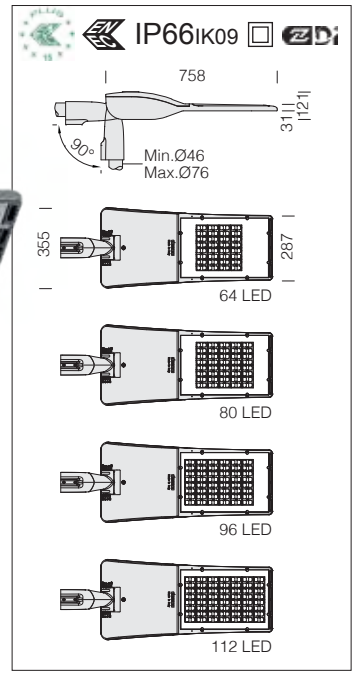

3473 Giovi W1 - residential amenities

		CLD PROG			LUMEN OUTPUT (tq= 25 °C)
LED	colour	weight	code	W tot	K - ølm 700mA - CRI
LED	RAL 7021	8.90	341030-00	**125**	4000K - 19346lm - CRI 70
			341030-39		3000K - 18378lm - CRI 70
LED	RAL 7021	8.90	341031-00	**170**	4000K - 25436lm - CRI 70
			341031-39		3000K - 24148lm - CRI 70
LED	RAL 7021	8.90	341032-00	**203**	4000K - 30542lm - CRI 70
			341032-39		3000K - 29016lm - CRI 70
LED	RAL 7021	10.50	341033-00	**238**	4000K - 34957lm - CRI 70
			341033-39		3000K - 33207lm - CRI 70

Example	Power supply	n.LED	W tot	K	ølm
upon request	350mA	64	**66**	**4000K**	10874lm
		80	**83**		14297lm
		96	**100**		17168lm
		112	**117**		19649lm

n.LED	W tot	K	ølm
64	**66**	**3000K**	10330lm
80	**83**		13574lm
96	**100**		16310lm
112	**117**		18666lm

Optics: in PMMA, highly resistant to temperature and UV radiation.

LED: power factor ≥0.9.
Luminous flux maintenance 90%: 100.000h (L90B10).

RG0 Ethr | +50 C° -30 | U.V. | LOW FLICKER | 3000K | 4000K

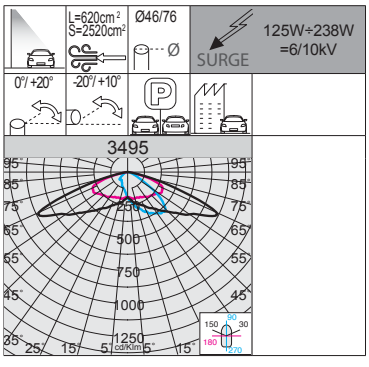

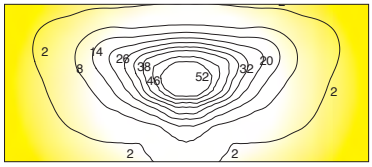



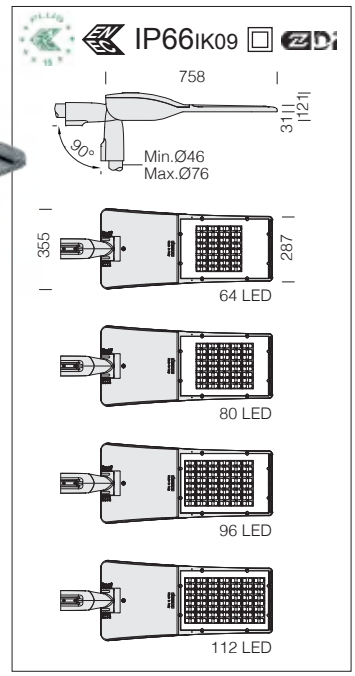

3495 Giovi W2 - residential amenities

		CLD PROG			LUMEN OUTPUT (tq= 25 °C)
LED	colour	weight	code	W tot	K - ølm 700mA - CRI
LED	RAL 7021	8.90	341010-00	**125**	4000K - 19165lm - CRI 70
			341010-39		3000K - 18205lm - CRI 70
LED	RAL 7021	8.90	341011-00	**170**	4000K - 25199lm - CRI 70
			341011-39		3000K - 23938lm - CRI 70
LED	RAL 7021	8.90	341012-00	**203**	4000K - 30447lm - CRI 70
			341012-39		3000K - 28924lm - CRI 70
LED	RAL 7021	10.50	341013-00	**238**	4000K - 34848lm - CRI 70
			341013-39		3000K - 33106lm - CRI 70

Example	Power supply	n.LED	W tot	K	ølm
upon request	350mA	64	**66**	**4000K**	10773lm
		80	**83**		14164lm
		96	**100**		17115lm
		112	**117**		19587lm
upon request	530mA	64	**100**	**4000K**	15368lm
		80	**125**		20207lm
		96	**150**		24415lm
		112	**175**		27944lm

n.LED	W tot	K	ølm
64	**66**	**3000K**	10233lm
80	**83**		13455lm
96	**100**		16258lm
112	**117**		18608lm
64	**100**	**3000K**	14599lm
80	**125**		19196lm
96	**150**		23194lm
112	**175**		26547lm

Optics: in PMMA, highly resistant to temperature and UV radiation.

LED: power factor ≥0.9.
Luminous flux maintenance 90%: 100.000h (L90B10).

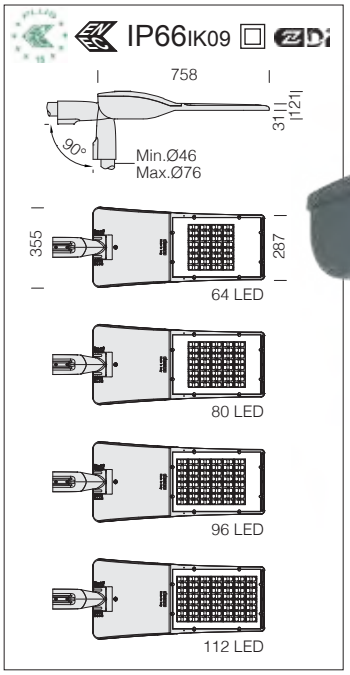



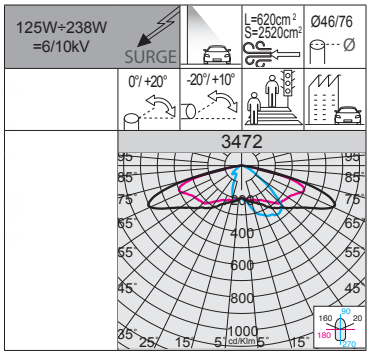

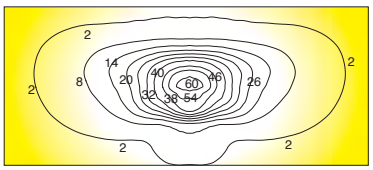

Optics: in PMMA, highly resistant to temperature and UV radiation.

LED: power factor ≥0.9.
Luminous flux maintenance 90%: 100.000h (L90B10).

3472 Giovi M1 - residential amenities

		CLD PROG			LUMEN OUTPUT (tq= 25 °C)
LED	colour	weight	code	W tot	K - ølm 700mA - CRI
LED	RAL 7021	8.90	341020-00	**125**	4000K - 18984lm - CRI 70
			341020-39		3000K - 18040lm - CRI 70
LED	RAL 7021	8.90	341021-00	**170**	4000K - 24962lm - CRI 70
			341021-39		3000K - 23679lm - CRI 70
LED	RAL 7021	8.90	341022-00	**203**	4000K - 30056lm - CRI 70
			341022-39		3000K - 28536lm - CRI 70
LED	RAL 7021	10.50	341023-00	**238**	4000K - 34401lm - CRI 70
			341023-39		3000K - 32675lm - CRI 70

Example	Power supply	n.LED	W tot	K	ølm
upon request	350mA	64	**66**	**4000K**	10671lm
		80	**83**		14031lm
		96	**100**		16894lm
		112	**117**		19337lm

n.LED	W tot	K	ølm
64	**66**	**3000K**	10140lm
80	**83**		13310lm
96	**100**		16040lm
112	**117**		18367lm

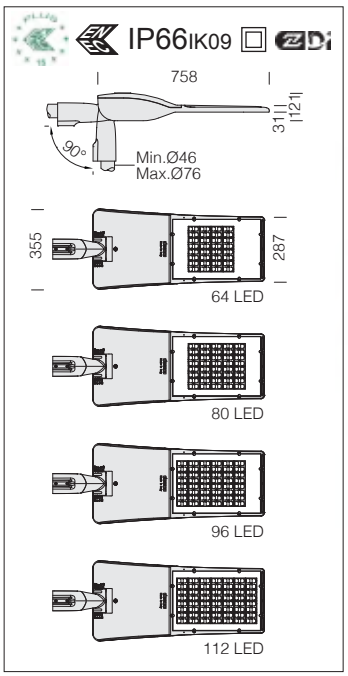

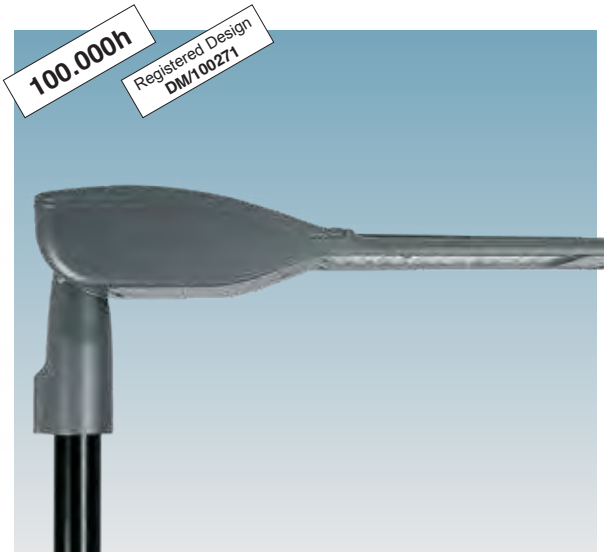

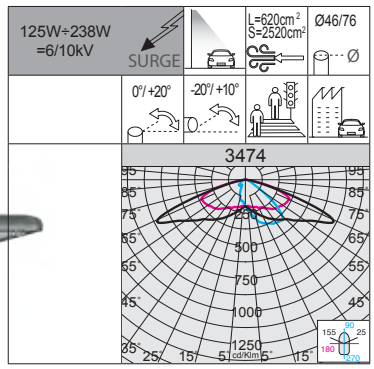

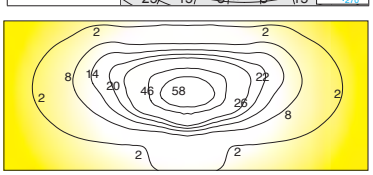

Optics: in PMMA, highly resistant to temperature and UV radiation.

LED: power factor ≥0.9.
Luminous flux maintenance 90%: 100.000h (L90B10).

3474 Giovi M2 - residential amenities

		CLD PROG			LUMEN OUTPUT (tq= 25 °C)
LED	colour	weight	code	W tot	K - ølm 700mA - CRI
LED	RAL 7021	8.90	341110-00	**125**	4000K - 19082lm - CRI 70
			341110-39		3000K - 18128lm - CRI 70
LED	RAL 7021	8.90	341111-00	**170**	4000K - 25092lm - CRI 70
			341111-39		3000K - 23713lm - CRI 70
LED	RAL 7021	8.90	341112-00	**203**	4000K - 30244lm - CRI 70
			341112-39		3000K - 28731lm - CRI 70
LED	RAL 7021	10.50	341113-00	**238**	4000K - 34615lm - CRI 70
			341113-39		3000K - 32874lm - CRI 70

Example	Power supply	n.LED	W tot	K	ølm
upon request	350mA	64	**66**	**4000K**	10726lm
		80	**83**		14104lm
		96	**100**		17000lm
		112	**117**		19457lm
upon request	530mA	64	**100**	**4000K**	15302lm
		80	**125**		20121lm
		96	**150**		24253lm
		112	**175**		27757lm

n.LED	W tot	K	ølm
64	**66**	**3000K**	10190lm
80	**83**		13399lm
96	**100**		16150lm
112	**117**		18478lm
64	**100**	**3000K**	14537lm
80	**125**		19114lm
96	**150**		23039lm
112	**175**		26362lm



Examples of installation of Giovi at pedestrian crossings

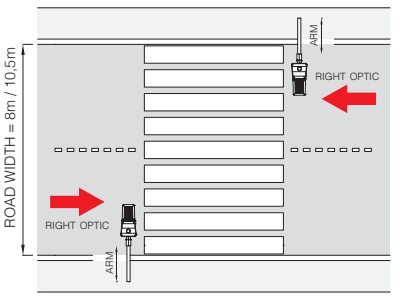

EXAMPLE OF INSTALLATION ON TWO-WAY ROADS

POLE HEIGHT H=6m							
road width	tot. wattage	extension	road lumin. class	pedestrian lumin. class	ev min. richiesto	ev min.	fixtures arrangement
8m	170W	0m	M3- M4	EV2	30lux	36lux	DX-DX
10,5m	170W	1,25m					

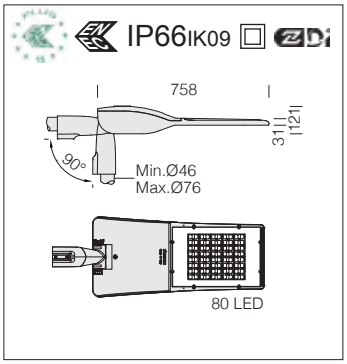

Optics: in PMMA, highly resistant to temperature and UV radiation.

LED: power factor ≥0.9.
Luminous flux maintenance 90%: 100.000h (L90B10).



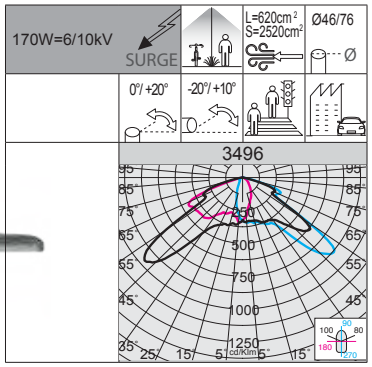

RG0 Ethr | +50 C° -30 | U.V. | LOW FLICKER | 3000K | 4000K

3496 Giovi - left (L) - for pedestrian crossing					
		CLD PROG			LUMEN OUTPUT (tq= 25 °C)
LED	colour	weight	code	W tot	K - ølm 700mA - CRI
LED	RAL 7021	8.90	341080-00	**170**	4000K - 25423lm - CRI 70
			341080-39		3000K - 24153lm - CRI 70

Example	Power supply	n.LED	W tot	K	ølm
upon request	350mA	80	**83**	**4000K**	14290lm
upon request	530mA	80	**125**	**4000K**	20387lm

n.LED	W tot	K	ølm
80	**83**	**3000K**	13576lm
80	**125**	**3000K**	19368lm

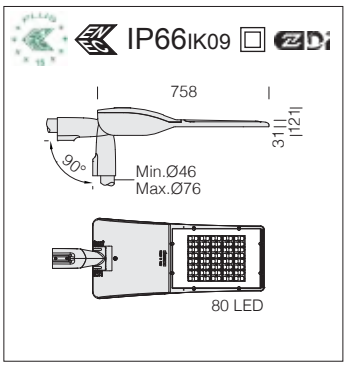

Optics: in PMMA, highly resistant to temperature and UV radiation.

LED: power factor ≥0.9.
Luminous flux maintenance 90%: 100.000h (L90B10).



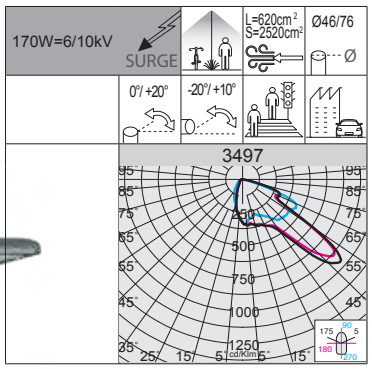

RG0 Ethr | +50 C° -30 | U.V. | LOW FLICKER | 3000K | 4000K

3497 Giovi - right (R) - for pedestrian crossing					
		CLD PROG			LUMEN OUTPUT (tq= 25 °C)
LED	colour	weight	code	W tot	K - ølm 700mA - CRI
LED	RAL 7021	8.90	341090-00	**170**	4000K - 25423lm - CRI 70
			341090-39		3000K - 24153lm - CRI 70

Example	Power supply	n.LED	W tot	K	ølm
upon request	350mA	80	**83**	**4000K**	14290lm
upon request	530mA	80	**125**	**4000K**	20387lm

n.LED	W tot	K	ølm
80	**83**	**3000K**	13576lm
80	**125**	**3000K**	19368lm



RG0
Ethr
+50 C° -30
U.V.
LOW FLICKER
3000K
4000K

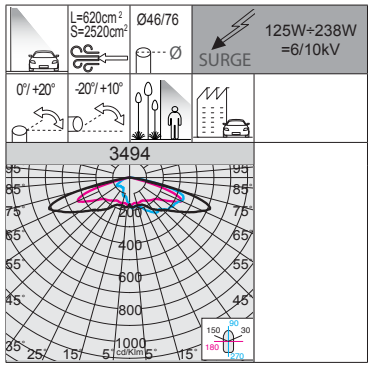



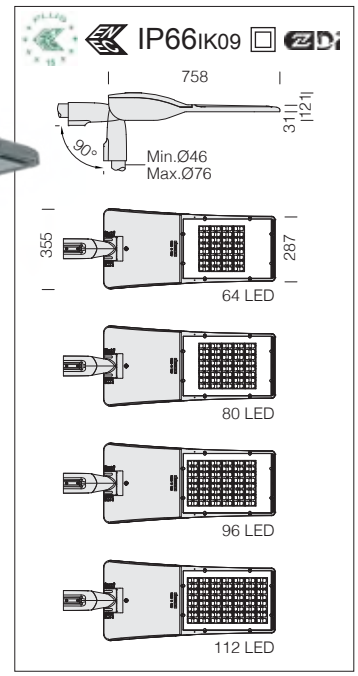

3494 Giovi T4 - asymmetric - large areas

		CLD PROG			LUMEN OUTPUT (tq= 25 °C)
LED	colour	weight	code	W tot	K - ølm 700mA - CRI
LED	RAL 7021	8.90	341000-00	**125**	4000K - 18000lm - CRI 70
			341000-39		3000K - 17102lm - CRI 70
LED	RAL 7021	8.90	341001-00	**170**	4000K - 23666lm - CRI 70
			341001-39		3000K - 22474lm - CRI 70
LED	RAL 7021	8.90	341002-00	**203**	4000K - 29460lm - CRI 70
			341002-39		3000K - 27987lm - CRI 70
LED	RAL 7021	10.50	341003-00	**238**	4000K - 33718lm - CRI 70
			341003-39		3000K - 32028lm - CRI 70

Example	Power supply	n.LED	W tot	K	ølm
upon request	350mA	64	**66**	**4000K**	10118lm
		80	**83**		13303lm
		96	**100**		16559lm
		112	**117**		18953lm
upon request	530mA	64	**100**	**4000K**	14434lm
		80	**125**		18978lm
		96	**150**		23625lm
		112	**175**		27038lm

n.LED	W tot	K	ølm
64	**66**	**3000K**	9613lm
80	**83**		12632lm
96	**100**		15731lm
112	**117**		18003lm
64	**100**	**3000K**	13713lm
80	**125**		18022lm
96	**150**		22443lm
112	**175**		25683lm

Optics: in PMMA, highly resistant to temperature and UV radiation.

LED: power factor ≥0.9.
Luminous flux maintenance 90%: 100.000h (L90B10).

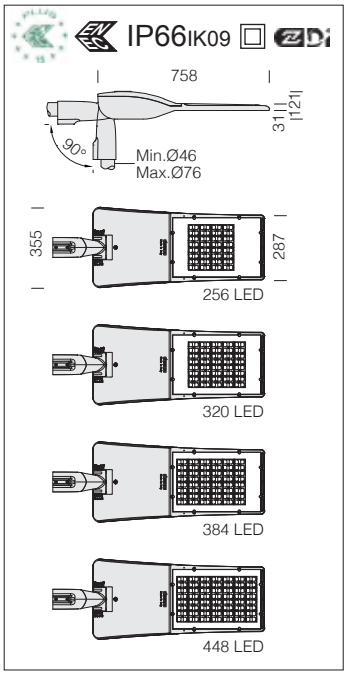

Optics: in PMMA, highly resistant to temperature and UV radiation.

LED: power factor ≥0.9.
Luminous flux maintenance 80%: 60.000h (L80B10).

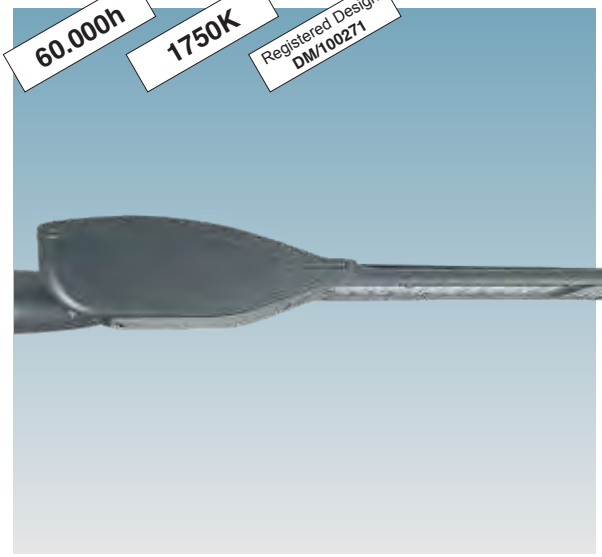

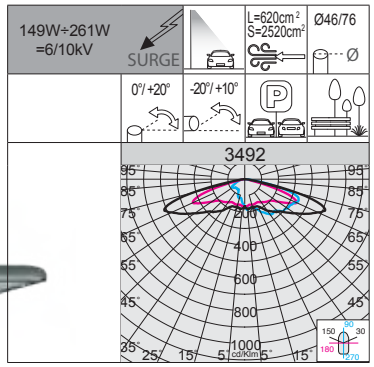

1750K: lamps with warm light at a colour temperature of 1750K are ideal for particularly dangerous areas (pedestrian crossings, entries, roundabouts, etc.) and to minimize the lighting's impact on the environment and on the fauna of green urban areas.

RG0 Ethr
+50 C° -30
U.V.
LOW FLICKER
1750K

3492 Giovi AMBER T4 - large areas

		CLD PROG			LUMEN OUTPUT (tq= 25 °C)
LED	colour	weight	code	W tot	K - ølm 200mA - CRI
LED	RAL 7021	8.90	341060-44	**149**	1750K - 14049lm - **AMBER**
		8.90	341061-44	**187**	1750K - 17321lm - **AMBER**
		8.90	341062-44	**224**	1750K - 20481lm - **AMBER**
		10.50	341063-44	**261**	1750K - 23870lm - **AMBER**

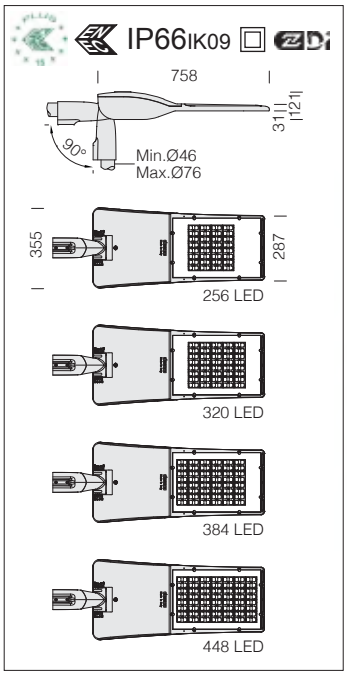

Optics: in PMMA, highly resistant to temperature and UV radiation.

LED: power factor ≥0.9.
Luminous flux maintenance 80%: 60.000h (L80B10).



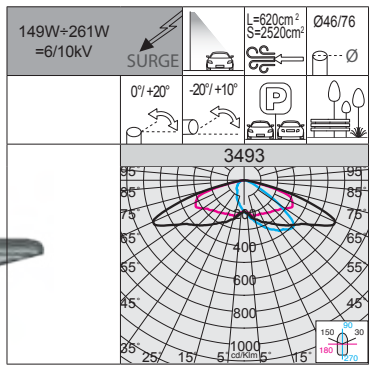

1750K: lamps with warm light at a colour temperature of 1750K are ideal for particularly dangerous areas (pedestrian crossings, entries, roundabouts, etc.) and to minimize the lighting's impact on the environment and on the fauna of green urban areas.

RG0 Ethr
+50 C° -30
U.V.
LOW FLICKER
1750K

3493 Giovi AMBER - residential amenities ME

		CLD PROG			LUMEN OUTPUT (tq= 25 °C)
LED	colour	weight	code	W tot	K - ølm 200mA - CRI
LED	RAL 7021	8.90	341070-44	**149**	1750K - 14414lm - **AMBER**
		8.90	341071-44	**187**	1750K - 17770lm - **AMBER**
		8.90	341072-44	**224**	1750K - 21011lm - **AMBER**
		10.50	341073-44	**261**	1750K - 24489lm - **AMBER**

ACCESSORIES



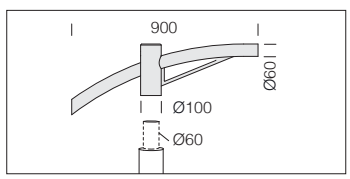

acc. 504 single arm	
RAL 9006	991262-00
RAL 7021	991263-00
Suited for poles with a diameter 60mm.	

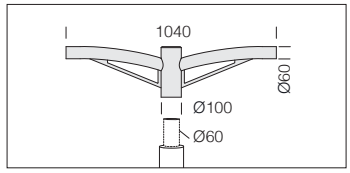

acc. 508 double arm	
RAL 9006	991266-00
RAL 7021	991267-00
Suited for poles with a diameter 60mm.	

GENERAL CHARACTERISTICS

Housing and cover: in die-cast aluminium and designed with a very small surface exposed to wind. Cooling fins are integrated into the cover.

Pole connection: in die-cast aluminium and with gaskets to secure the frame according to different inclinations. Adjustable ranges: between 0° and 20° for side mount; and between 0° and 20° for mast-top mounting. Inclination pace: 5°. Suited for poles with a diameter 42-76mm.

Diffuser: extra-clear, tempered glass, 4 mm thick, resistant to thermal shock and impacts (UNI-EN12150-1: 2001).

Coating: the fully automated powder-coating cycle involves a polyester-based, salt-spray corrosion-resistant and UV-stabilised paint.
The SELLA luminaire **is declared** to have passed the 2000 hours of salt corrosion resistance test in accordance with ASTM B 117 standard and the 2000 hours of UV condensation test in accordance with the ASTM G 154 standard.

OTHER CHARACTERISTICS

Standard supply: double insulation switch that cuts off electricity when the cover is opened. Complete with waterproof connector for quick installation. With dedicated electronic device to protect the LED module.

Optical system: the modularity of the optical system, the solutions used for the electronic circuit design and the optimal control of operating temperatures, make the Sella line a highly professional, flexible and reliable product, capable of guaranteeing huge application advantages in several situations.

Heat sink: the heat dissipation system is specially designed and made to allow the operation of the LED lights with temperatures ensuring excellent performance/efficiency and durability.



Product with a very low flicker; uniform light for greater eye protection.

OTHER INFORMATION



Electronic safety device to protect the LED module and the related ballast compliant with EN 61547.
It works in two modes:
- differential mode: surge between power cables and between the phase and neutral.
- common mode: surge between power, L/N and ground cables or between the fixture's body if it is of class II and installed on a metal pole.

Upon request: Class 2 - protection up to 10KV.



The products of the Sella 1 family are compliant with all applicable tests (third-party certification) pursuant to standard **ANSI C136.31: Street Lighting – Luminaire Vibration.**
- Test level: 3.0G Level 2 for bridge/overpass applications.

UPON REQUEST



Protective coating recommended for marine environments within 5 km of the sea.



PROG (CLD PROG) AVAILABLE FUNCTIONS

Luminous flux setup	This can be done by programming the drive current values requested when ordering/purchasing the fixture
CLO (Constant Light Output)	The lighting fixture maintains a constant light output throughout its entire service life

LIGHTING POINT MANAGEMENT OPTIONS ON REQUEST

possibility to choose different lighting point management systems according to the system's needs:

1-10V dimming ordered with **sub-code -12**	Adjustment range from 10%-100% with 1-10V
Virtual Midnight order with **subcode -30**	Stand-alone system with automatic luminous flux reduction in **4 steps**. To increase energy savings at night when there are fewer people and vehicles around, a lighting fixture can be programmed according to a specific profile (customizable on request). The fixture reduces its luminous flux through a self-learning process which, depending on the previous switching on and off times, will determine a hypothetical "virtual midnight". This is the average value between the time the fixture is switched on (sunset) and switched off (sunrise). The "virtual midnight" is the reference point for dimming lights according to the desired profile. The device is integrated in the LED driver and therefore does not require any modification to the system. *In order for the system to function correctly, the system must be adjusted by a device that turns the system on and off on a regular basis every day.* ***ATTENTION:*** *original settings and time slots for the "virtual midnight" value can be customized in up to 5 steps upon request.*

Factory settings	
Time	**Flux**
on ÷ 22:00	100%
22:00 ÷ 23:30	75%
23:30 ÷ 02:30	50%
02:30 ÷ 04:00	75%
04:00 ÷ off	100%

PLC remote control ordered with **sub-code -0078**	Point-to-point and system management and diagnosis system

For more information see page XX-XXIII



Exemple with Zhaga Socket (subcode -0054)

LUMINAIRE DESIGNED FOR INSTALLATION ON NEMA OR ZHAGA SOCKET: to monitor and manage public lighting centrally, lighting fixtures will always be more equipped with wireless controls that will allow their integration with the IoT. Today the market offers two solutions: **NEMA and ZHAGA**. Both solutions offer an electrical and mechanical connection between the control antenna and the lighting fixture.

Nema Socket order with **subcode -40** (sealing cap to be ordered separately)	Mounted directly on the fixture's body, ideal for remote lighting management applications.
Zhaga Socket order with **subcode -0054** (complete with sealing cap)	















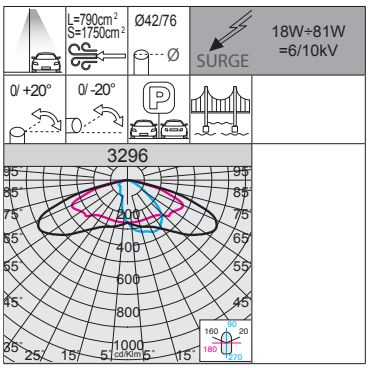



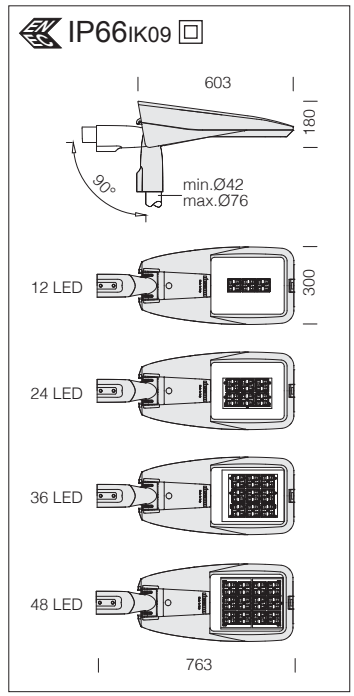

Upon request: (subcode -39)	
LED	3000K - CRI 70

3296 Sella 1 - HIGH PERFORMANCE

		CLD PROG			LUMEN OUTPUT (tq= 25 °C)
LED	colour	weight	code	W tot	K - ølm - CRI
LED	RAL 9006	7.50	330900-00	**18**	4000K - 2860lm - CRI 70
	RAL 7021		330901-00		
LED	RAL 9006	7.50	330902-00	**32**	4000K - 5324lm - CRI 70
	RAL 7021		330903-00		
LED	RAL 9006	7.50	330904-00	**54**	4000K - 8493lm - CRI 70
	RAL 7021		330905-00		
LED	RAL 9006	7.50	330906-00	**81**	4000K - 12550lm - CRI 70
	RAL 7021		330907-00		

Lenses: in PMMA, highly resistant to temperature and UV radiation.

LED: power factor ≥0,9.
Luminous flux maintenance 80%: 80.000h (L80B20).

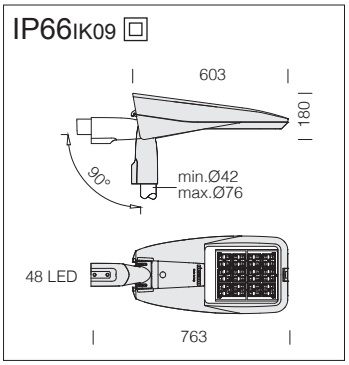



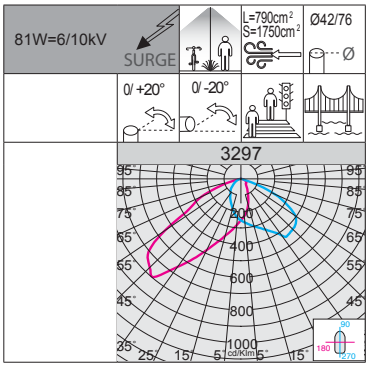

RG0 Ethr

+50 C° -30

U.V.

LOW FLICKER

Lenses: in PMMA, highly resistant to temperature and UV radiation.

LED: power factor ≥0,9.
Luminous flux maintenance 80%: 80.000h (L80B20).

Upon request: (subcode -39)	
LED	3000K - CRI 70

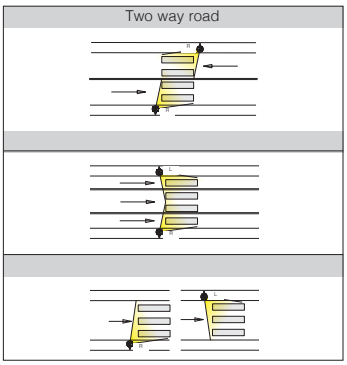

3297 Sella 1 HP - left (L) - HIGH PERFORMANCE - for pedestrian crossing

		CLD PROG			LUMEN OUTPUT (tq= 25 °C)
LED	colour	weight	code	W tot	K - ølm - CRI
LED	RAL 9006	7.50	330910-00	**81**	4000K - 13545lm - CRI 70
	RAL 7021		330911-00		

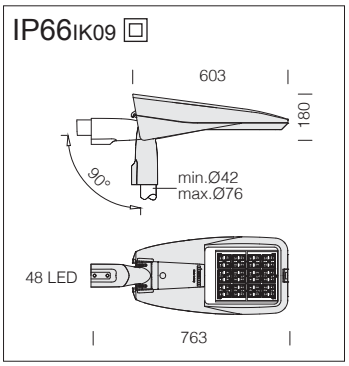



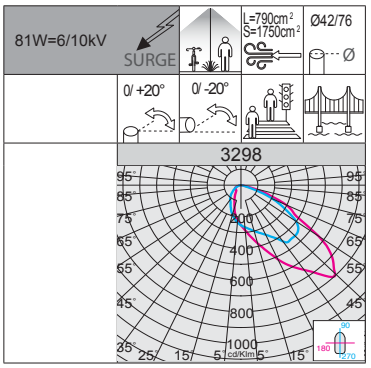

RG0 Ethr

+50 C° -30

U.V.

LOW FLICKER

Lenses: in PMMA, highly resistant to temperature and UV radiation.

LED: power factor ≥0,9.
Luminous flux maintenance 80%: 80.000h (L80B20).

Upon request: (subcode -39)	
LED	3000K - CRI 70

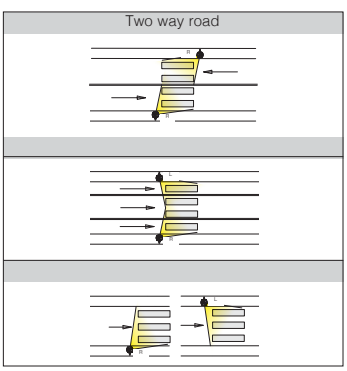

3298 Sella 1 HP - droit (DRO) - HIGH PERFORMANCE - for pedestrian crossing

		CLD PROG			LUMEN OUTPUT (tq= 25 °C)
LED	colour	weight	code	W tot	K - ølm - CRI
LED	RAL 9006	7.50	330915-00	**81**	4000K - 13545lm - CRI 70
	RAL 7021		330916-00		



Energy-saving: the possibility to choose the correct drive current for LEDs will allow you to have the right power under specific design conditions, and also help you deal with maintenance and retrofitting problems. Using a lower current will improve the efficiency of fixtures and therefore increase energy savings, whilst a higher current will result in a higher light flux so that you can reduce the number of fixtures.

Example	Power supply	n.LED	W tot	K	ølm
Sella 1 - ST art. 3290	300mA	8	**17**	**4000K**	2765lm
		16	**34**		5531lm
		24	**51**		8238lm
Sella 1 - ST art. 3290	480mA	8	**28**	**4000K**	4260lm
		16	**56**		8521lm
		24	**85**		12692lm

n.LED	W tot	K	ølm
8	**17**	**3000K**	2626lm
16	**34**		5254lm
24	**51**		7825lm
8	**28**	**3000K**	4047lm
16	**56**		8094lm
24	**85**		12057lm

Example	Power supply	n.LED	W tot	K	ølm
Sella 1 - STWB art. 3291	300mA	8	**17**	**4000K**	2716lm
		16	**34**		5433lm
		24	**51**		8113lm
Sella 1 - STWB art. 3291	480mA	8	**28**	**4000K**	4185lm
		16	**56**		8371lm
		24	**85**		12468lm

n.LED	W tot	K	ølm
8	**17**	**3000K**	2580lm
16	**34**		5161lm
24	**51**		7685lm
8	**28**	**3000K**	3976lm
16	**56**		7952lm
24	**85**		11844lm

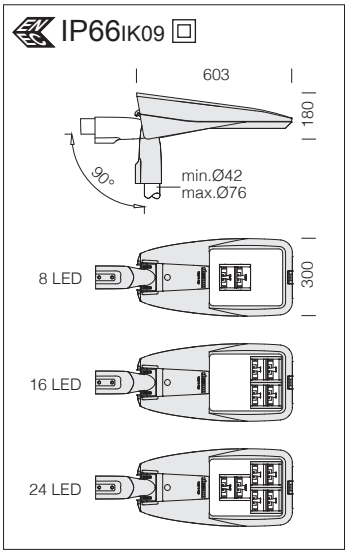

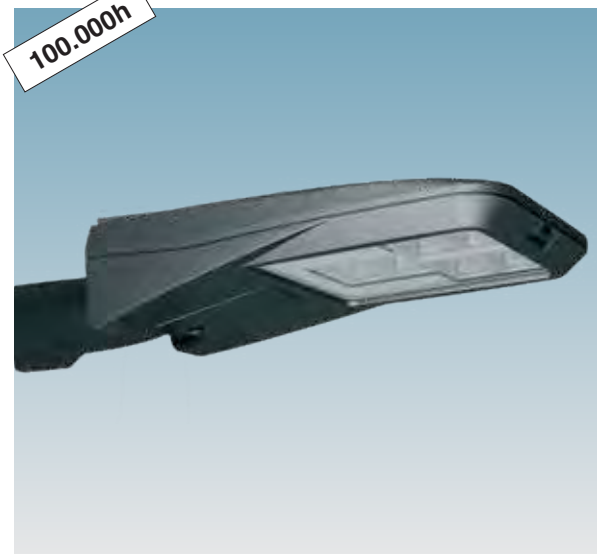

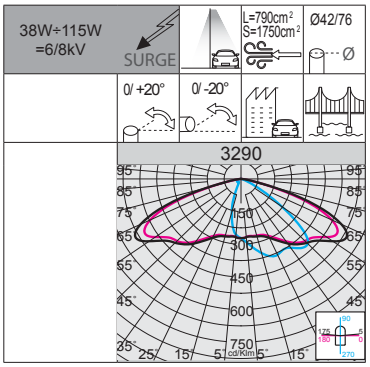

RGO Ethr
+50 C° -30
U.V.
LOW FLICKER
3000K
4000K

Optics: in aluminium coated with very high purity (99.99%) silver using physical vapour deposition (PVD).

LED: power factor ≥0.92.
Luminous flux maintenance 80%: 100.000h (L80B10).

3290 Sella 1 - ST

		CLD PROG			LUMEN OUTPUT (tq= 25 °C)
LED	colour	weight	code	W tot	K - ølm 640mA - CRI
LED	RAL 9006	7.50	330603-00	**38**	4000K - 5513lm - CRI 70
	RAL 7021		330600-00		
LED	RAL 9006	7.50	330603-39	**38**	3000K - 5237lm - CRI 70
	RAL 7021		330600-39		
LED	RAL 9006	7.50	330604-00	**77**	4000K - 11025lm - CRI 70
	RAL 7021		330601-00		
LED	RAL 9006	7.50	330604-39	**77**	3000K - 10474lm - CRI 70
	RAL 7021		330601-39		
LED	RAL 9006	7.50	330605-00	**115**	4000K - 16421lm - CRI 70
	RAL 7021		330602-00		
LED	RAL 9006	7.50	330605-39	**115**	3000K - 15602lm - CRI 70
	RAL 7021		330602-39		

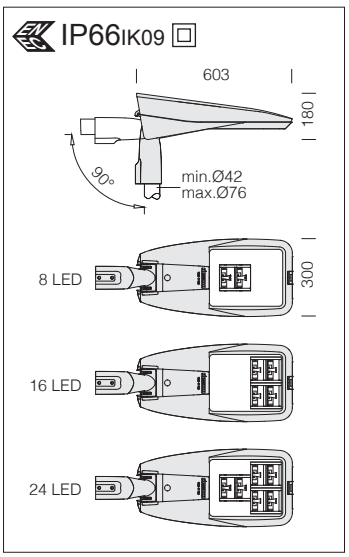



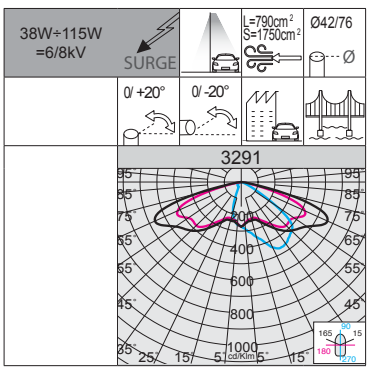

RGO Ethr
+50 C° -30
U.V.
LOW FLICKER
3000K
4000K

Optics: in aluminium coated with very high purity (99.99%) silver using physical vapour deposition (PVD).

LED: power factor ≥0.92.
Luminous flux maintenance 80%: 100.000h (L80B10).

3291 Sella 1 - STWB

		CLD PROG			LUMEN OUTPUT (tq= 25 °C)
LED	colour	weight	code	W tot	K - ølm 640mA - CRI
LED	RAL 9006	7.50	330613-00	**38**	4000K - 5415lm - CRI 70
	RAL 7021		330610-00		
LED	RAL 9006	7.50	330613-39	**38**	3000K - 5144lm - CRI 70
	RAL 7021		330610-39		
LED	RAL 9006	7.50	330614-00	**77**	4000K - 10830lm - CRI 70
	RAL 7021		330611-00		
LED	RAL 9006	7.50	330614-39	**77**	3000K - 10289lm - CRI 70
	RAL 7021		330611-39		
LED	RAL 9006	7.50	330615-00	**115**	4000K - 16131lm - CRI 70
	RAL 7021		330612-00		
LED	RAL 9006	7.50	330615-39	**115**	3000K - 15325lm - CRI 70
	RAL 7021		330612-39		

RG0 Ethr | +50 C° -30 | U.V. | LOW FLICKER | 3000K | 4000K

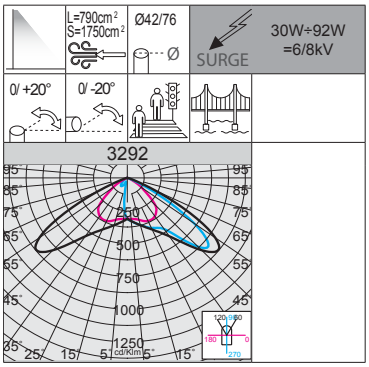



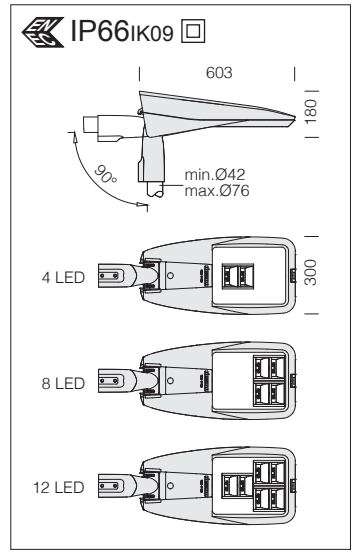

3292 Sella 1 - asymmetric 45°					
		CLD PROG			LUMEN OUTPUT (tq= 25 °C)
LED	colour	weight	code	W tot	K - ølm 640mA - CRI
LED	RAL 9006	7.50	330664-00	**30**	4000K - 4678lm - CRI 70
	RAL 7021		330660-00		
LED	RAL 9006	7.50	330664-39	**30**	3000K - 4444lm - CRI 70
	RAL 7021		330660-39		
LED	RAL 9006	7.50	330665-00	**61**	4000K - 9356lm - CRI 70
	RAL 7021		330661-00		
LED	RAL 9006	7.50	330665-39	**61**	3000K - 8888lm - CRI 70
	RAL 7021		330661-39		
LED	RAL 9006	7.50	330666-00	**92**	4000K - 13614lm - CRI 70
	RAL 7021		330662-00		
LED	RAL 9006	7.50	330666-39	**92**	3000K - 12933lm - CRI 70
	RAL 7021		330662-39		

Optics: in aluminium coated with very high purity (99.99%) silver using physical vapour deposition (PVD).

LED: power factor ≥0.92.
Luminous flux maintenance 80%: 80.000h (L80B10).

RG0 Ethr | +50 C° -30 | U.V. | LOW FLICKER | 3000K | 4000K

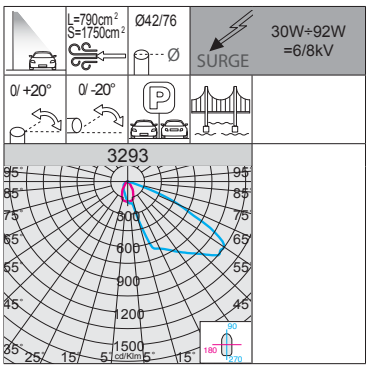



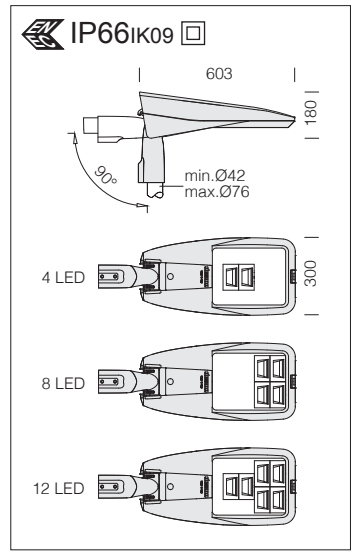

3293 Sella 1 - asymmetric 60°					
		CLD PROG			LUMEN OUTPUT (tq= 25 °C)
LED	colour	weight	code	W tot	K - ølm 640mA - CRI
LED	RAL 9006	7.50	330684-00	**30**	4000K - 4221lm - CRI 70
	RAL 7021		330680-00		
LED	RAL 9006	7.50	330684-39	**30**	3000K - 3988lm - CRI 70
	RAL 7021		330680-39		
LED	RAL 9006	7.50	330685-00	**61**	4000K - 8443lm - CRI 70
	RAL 7021		330681-00		
LED	RAL 9006	7.50	330685-39	**61**	3000K - 7978lm - CRI 70
	RAL 7021		330681-39		
LED	RAL 9006	7.50	330686-00	**92**	4000K - 12665lm - CRI 70
	RAL 7021		330682-00		
LED	RAL 9006	7.50	330686-39	**92**	3000K - 11968lm - CRI 70
	RAL 7021		330682-39		

Optics: in aluminium coated with very high purity (99.99%) silver using physical vapour deposition (PVD).

LED: power factor ≥0.92.
Luminous flux maintenance 80%: 80.000h (L80B10).

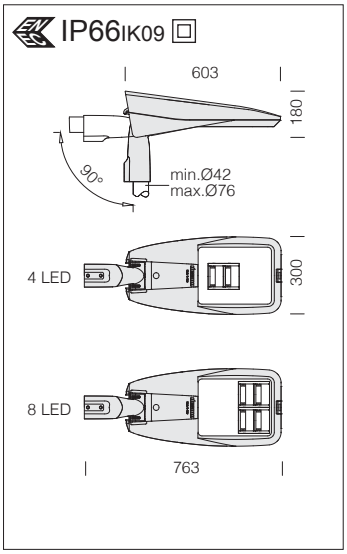

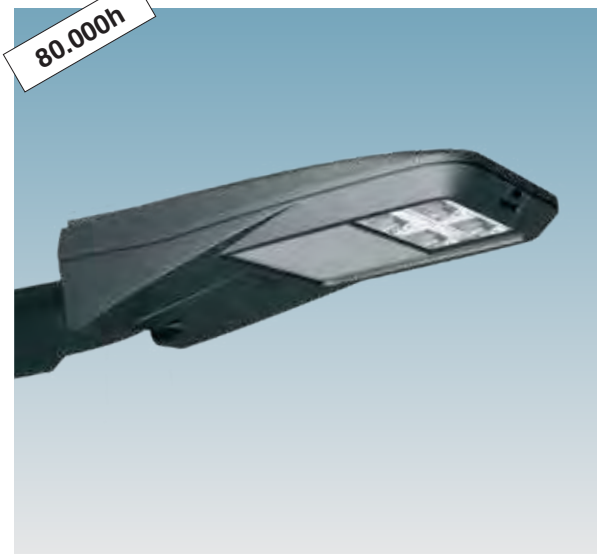

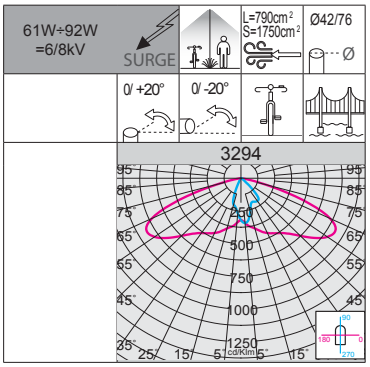

RG0 Ethr

+50 C° -30

U.V.

LOW FLICKER

3000K

4000K

Optics: in aluminium coated with very high purity (99.99%) silver using physical vapour deposition (PVD).

LED: power factor ≥0.92.
Luminous flux maintenance 80%: 80.000h (L80B10).

3294 Sella 1 - cycle-pedestrian

		CLD PROG			LUMEN OUTPUT (tq= 25 °C)
LED	colour	weight	code	W tot	K - ølm 640mA - CRI
LED	RAL 9006	7.50	330702-00	**30**	4000K - 4220lm - CRI 70
	RAL 7021		330700-00		
LED	RAL 9006	7.50	330702-39	**30**	3000K - 4010lm - CRI 70
	RAL 7021		330700-39		
LED	RAL 9006	7.50	330703-00	**61**	4000K - 8440lm - CRI 70
	RAL 7021		330701-00		
LED	RAL 9006	7.50	330703-39	**61**	3000K - 8019lm - CRI 70
	RAL 7021		330701-39		

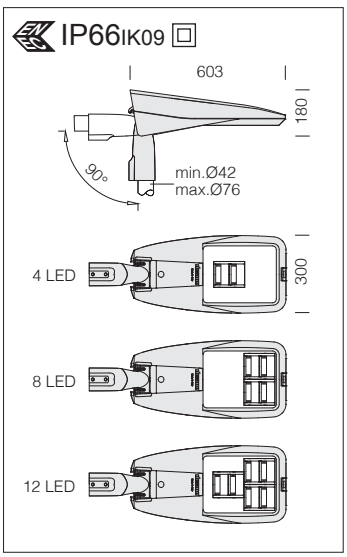



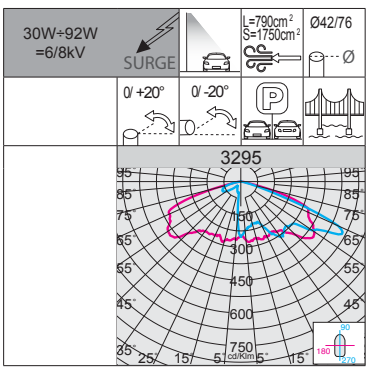

RG0 Ethr

+50 C° -30

U.V.

LOW FLICKER

3000K

4000K

Optics: in aluminium coated with very high purity (99.99%) silver using physical vapour deposition (PVD).

LED: power factor ≥0.92.
Luminous flux maintenance 80%: 80.000h (L80B10).

3295 Sella 1 - large areas

		CLD PROG			LUMEN OUTPUT (tq= 25 °C)
LED	colour	weight	code	W tot	K - ølm 640mA - CRI
LED	RAL 9006	7.50	330724-00	**30**	4000K - 4131lm - CRI 70
	RAL 7021		330720-00		
LED	RAL 9006	7.50	330724-39	**30**	3000K - 3903lm - CRI 70
	RAL 7021		330720-39		
LED	RAL 9006	7.50	330725-00	**61**	4000K - 8263lm - CRI 70
	RAL 7021		330721-00		
LED	RAL 9006	7.50	330725-39	**61**	3000K - 7809lm - CRI 70
	RAL 7021		330721-39		
LED	RAL 9006	7.50	330726-00	**92**	4000K - 12394lm - CRI 70
	RAL 7021		330722-00		
LED	RAL 9006	7.50	330726-39	**92**	3000K - 11712lm - CRI 70
	RAL 7021		330722-39		


BINGO
P

GENERAL CHARACTERISTICS

Housing and cover: in die-cast aluminium and designed with a very small surface exposed to wind. Cooling fins are integrated into the cover.

Pole connection: in die-cast aluminium and with gaskets to secure the frame according to different inclinations. Adjustable ranges: between 0° and 20° for side mount; and between 0° and 20° for mast-top mounting. Inclination pace: 5°. Suited for poles with a diameter 42-76mm.

Diffuser: extra-clear, tempered glass, 4 mm thick, resistant to thermal shock and impacts (UNI-EN12150-1: 2001).

Coating: the fully automated powder-coating cycle involves a polyester-based, salt-spray corrosion-resistant and UV-stabilised paint.
The SELLA luminaire **is declared** to have passed the 2000 hours of salt corrosion resistance test in accordance with ASTM B 117 standard and the 2000 hours of UV condensation test in accordance with the ASTM G 154 standard.

OTHER CHARACTERISTICS

Standard supply: double insulation switch that cuts off electricity when the cover is opened. Complete with waterproof connector for quick installation. With dedicated electronic device to protect the LED module.

Optical system: the modularity of the optical system, the solutions used for the electronic circuit design and the optimal control of operating temperatures, make the Sella line a highly professional, flexible and reliable product, capable of guaranteeing huge application advantages in several situations.

Heat sink: the heat dissipation system is specially designed and made to allow the operation of the LED lights with temperatures ensuring excellent performance/efficiency and durability.



Product with a very low flicker; uniform light for greater eye protection.

OTHER INFORMATION

Photometric performance: designed with an optical system capable of controlling the potential glare created by the growing light intensity of LEDs while achieving high photometric performance.



Electronic safety device to protect the LED module and the related ballast compliant with EN 61547.
It works in two modes:
- differential mode: surge between power cables and between the phase and neutral.
- common mode: surge between power, L/N and ground cables or between the fixture's body if it is of class II and installed on a metal pole.

Upon request: Class 2 - protection up to 10KV.

UPON REQUEST



Protective coating recommended for marine environments within 5 km of the sea.



PROG (CLD PROG) AVAILABLE FUNCTIONS

Luminous flux setup	This can be done by programming the drive current values requested when ordering/purchasing the fixture
CLO (Constant Light Output)	The lighting fixture maintains a constant light output throughout its entire service life

LIGHTING POINT MANAGEMENT OPTIONS ON REQUEST

possibility to choose different lighting point management systems according to the system's needs:

1-10V dimming ordered with **sub-code -12**	Adjustment range from 10%-100% with 1-10V
Virtual Midnight order with **subcode -30**	Stand-alone system with automatic luminous flux reduction in **4 steps**. To increase energy savings at night when there are fewer people and vehicles around, a lighting fixture can be programmed according to a specific profile (customizable on request). The fixture reduces its luminous flux through a self-learning process which, depending on the previous switching on and off times, will determine a hypothetical "virtual midnight". This is the average value between the time the fixture is switched on (sunset) and switched off (sunrise). The "virtual midnight" is the reference point for dimming lights according to the desired profile. The device is integrated in the LED driver and therefore does not require any modification to the system. *In order for the system to function correctly, the system must be adjusted by a device that turns the system on and off on a regular basis every day.* ***ATTENTION:*** *original settings and time slots for the "virtual midnight" value can be customized in up to 5 steps upon request.*
PLC remote control ordered with **sub-code -0078**	Point-to-point and system management and diagnosis system

Factory settings

Time	Flux
on ÷ 22:00	100%
22:00 ÷ 23:30	75%
23:30 ÷ 02:30	50%
02:30 ÷ 04:00	75%
04:00 ÷ off	100%

For more information see page XX-XXIII



Exemple with Zhaga Socket (subcode -0054)

LUMINAIRE DESIGNED FOR INSTALLATION ON NEMA OR ZHAGA SOCKET: to monitor and manage public lighting centrally, lighting fixtures will always be more equipped with wireless controls that will allow their integration with the IoT. Today the market offers two solutions: **NEMA and ZHAGA**. Both solutions offer an electrical and mechanical connection between the control antenna and the lighting fixture.

Nema Socket order with **subcode -40** (sealing cap to be ordered separately)	Mounted directly on the fixture's body, ideal for remote lighting management applications.
Zhaga Socket order with **subcode -0054** (complete with sealing cap)	

ACCESSORIES

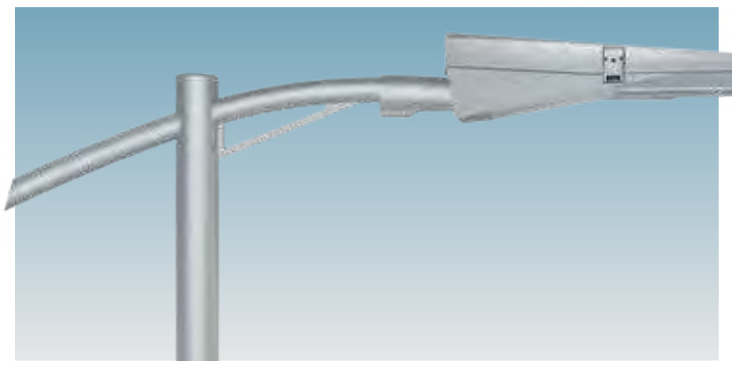

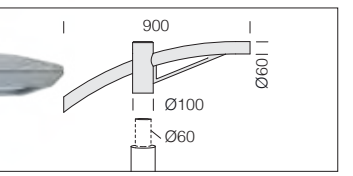

acc. 504 single arm	
RAL 9006	991262-00
RAL 7021	991263-00
Suited for poles with a diameter 60mm.	

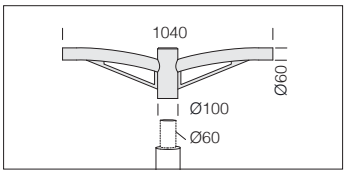

acc. 508 double arm	
RAL 9006	991266-00
RAL 7021	991267-00
Suited for poles with a diameter 60mm.	

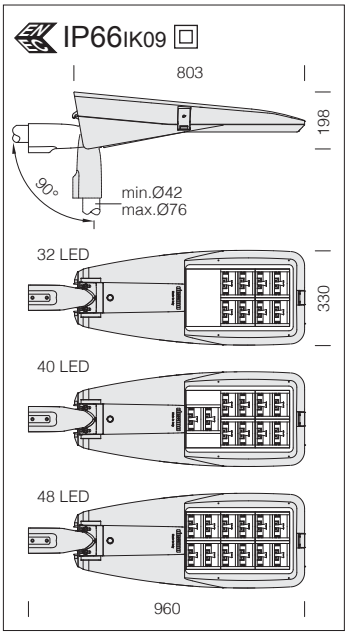



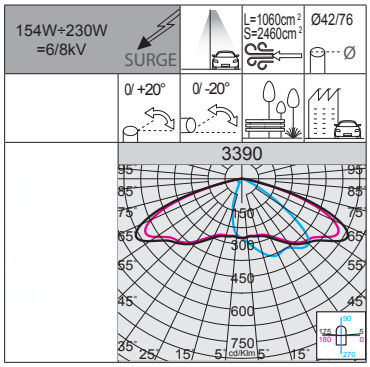

RGO Ethr
+50 C° -30
U.V.
LOW FLICKER
3000K
4000K

Optics: in aluminium coated with very high purity (99.99%) silver using physical vapour deposition (PVD).

LED: power factor ≥0.92.
Luminous flux maintenance 80%: 100.000h (L80B10).

3390 Sella 2 - ST

		CLD PROG			LUMEN OUTPUT (tq= 25 °C)
LED	colour	weight	code	W tot	K - ølm 640mA - CRI
LED	RAL 9006	11.40	330803-00	**154**	4000K - 23373lm - CRI 70
	RAL 7021		330800-00		
LED	RAL 9006	11.40	330803-39	**154**	3000K - 22204lm - CRI 70
	RAL 7021		330800-39		
LED	RAL 9006	11.40	330804-00	**192**	4000K - 29216lm - CRI 70
	RAL 7021		330801-00		
LED	RAL 9006	11.40	330804-39	**192**	3000K - 27755lm - CRI 70
	RAL 7021		330801-39		
LED	RAL 9006	11.40	330805-00	**230**	4000K - 35059lm - CRI 70
	RAL 7021		330802-00		
LED	RAL 9006	11.40	330805-39	**230**	3000K - 33305lm - CRI 70
	RAL 7021		330802-39		

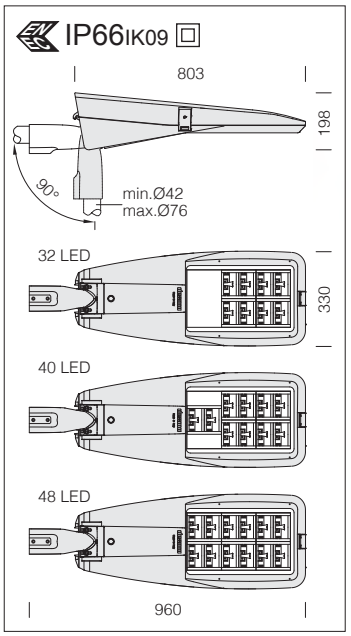



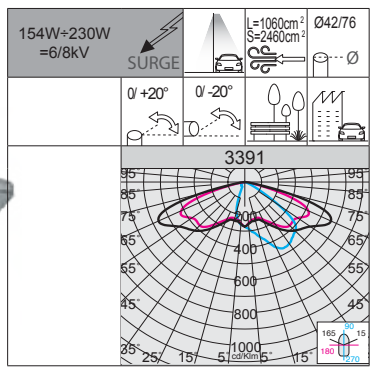

RGO Ethr
+50 C° -30
U.V.
LOW FLICKER
3000K
4000K

Optics: in aluminium coated with very high purity (99.99%) silver using physical vapour deposition (PVD).

LED: power factor ≥0.92.
Luminous flux maintenance 80%: 100.000h (L80B10).

3391 Sella 2 - STWB

		CLD PROG			LUMEN OUTPUT (tq= 25 °C)
LED	colour	weight	code	W tot	K - ølm 640mA - CRI
LED	RAL 9006	11.40	330813-00	**154**	4000K - 23016lm - CRI 70
	RAL 7021		330810-00		
LED	RAL 9006	11.40	330813-39	**154**	3000K - 21865lm - CRI 70
	RAL 7021		330810-39		
LED	RAL 9006	11.40	330814-00	**192**	4000K - 28762lm - CRI 70
	RAL 7021		330811-00		
LED	RAL 9006	11.40	330814-39	**192**	3000K - 27328lm - CRI 70
	RAL 7021		330811-39		
LED	RAL 9006	11.40	330815-00	**230**	4000K - 34720lm - CRI 70
	RAL 7021		330812-00		
LED	RAL 9006	11.40	330815-39	**230**	3000K - 32984lm - CRI 70
	RAL 7021		330812-39		















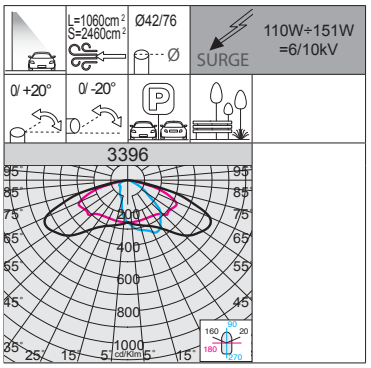



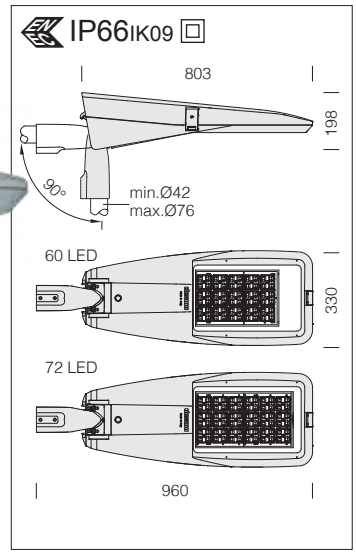

Upon request: (subcode -39)	
LED	3000K - CRI 70

3396 Sella 2 HP - HIGH PERFORMANCE

		CLD PROG			LUMEN OUTPUT (tq= 25 °C)
LED	colour	weight	code	W tot	K - ølm - CRI
LED	RAL 9006	11.40	330830-00	**110**	4000K - 16518lm - CRI 70
	RAL 7021		330831-00		
LED	RAL 9006	11.40	330832-00	**127**	4000K - 19936lm - CRI 70
	RAL 7021		330833-00		
LED	RAL 9006	11.40	330834-00	**151**	4000K - 22630lm - CRI 70
	RAL 7021		330835-00		

Lenses: in PMMA, highly resistant to temperature and UV radiation.

LED: power factor ≥0,9.
Luminous flux maintenance 80%: 80.000h (L80B20).















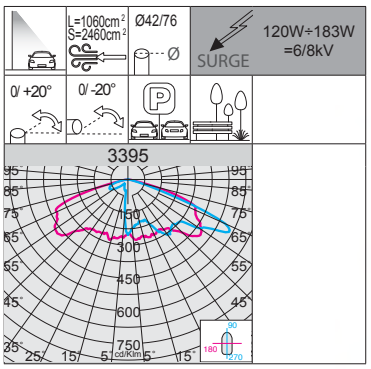



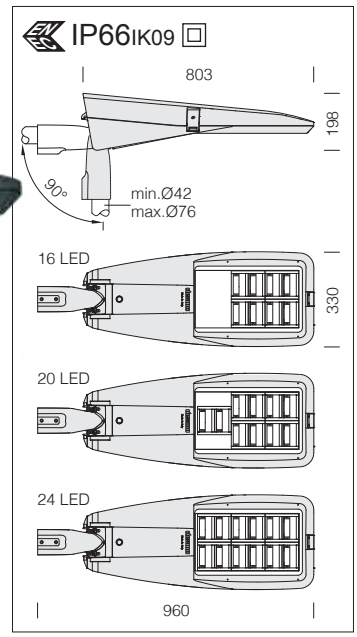

3395 Sella 2 - large areas

		CLD PROG			LUMEN OUTPUT (tq= 25 °C)
LED	colour	weight	code	W tot	K - ølm 640mA - CRI
LED	RAL 9006	11.40	330824-00	**120**	4000K - 16522lm - CRI 70
	RAL 7021		330820-00		
LED	RAL 9006	11.40	330824-39	**120**	3000K - 15696lm - CRI 70
	RAL 7021		330820-39		
LED	RAL 9006	11.40	330825-00	**152**	4000K - 20653lm - CRI 70
	RAL 7021		330821-00		
LED	RAL 9006	11.40	330825-39	**152**	3000K - 19516lm - CRI 70
	RAL 7021		330821-39		
LED	RAL 9006	11.40	330826-00	**183**	4000K - 24783lm - CRI 70
	RAL 7021		330822-00		
LED	RAL 9006	11.40	330826-39	**183**	3000K - 23419lm - CRI 70
	RAL 7021		330822-39		

Optics: in aluminium coated with very high purity (99.99%) silver using physical vapour deposition (PVD).

LED: power factor ≥0.92.
Luminous flux maintenance 80%: 100.000h (L80B10).

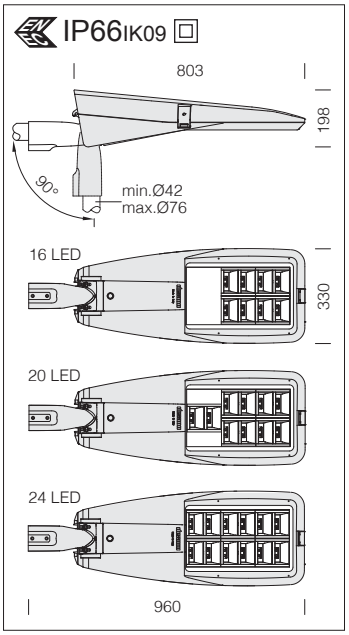



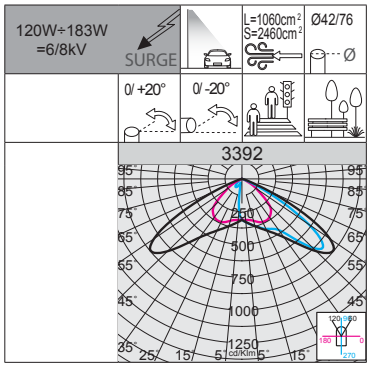

Optics: in aluminium coated with very high purity (99.99%) silver using physical vapour deposition (PVD).

LED: power factor ≥0.92.
Luminous flux maintenance 80%: 100.000h (L80B10).

3392 Sella 2 - asymmetric 45°

		CLD PROG			LUMEN OUTPUT (tq= 25 °C)
LED	colour	weight	code	W tot	K - ølm 640mA - CRI
LED	RAL 9006	11.40	330864-00	**120**	4000K - 18713lm - CRI 70
	RAL 7021		330860-00		
LED	RAL 9006	11.40	330864-39	**120**	3000K - 17777lm - CRI 70
	RAL 7021		330860-39		
LED	RAL 9006	11.40	330865-00	**152**	4000K - 23391lm - CRI 70
	RAL 7021		330861-00		
LED	RAL 9006	11.40	330865-39	**152**	3000K - 22221lm - CRI 70
	RAL 7021		330861-39		
LED	RAL 9006	11.40	330866-00	**183**	4000K - 28069lm - CRI 70
	RAL 7021		330862-00		
LED	RAL 9006	11.40	330866-39	**183**	3000K - 26666lm - CRI 70
	RAL 7021		330862-39		

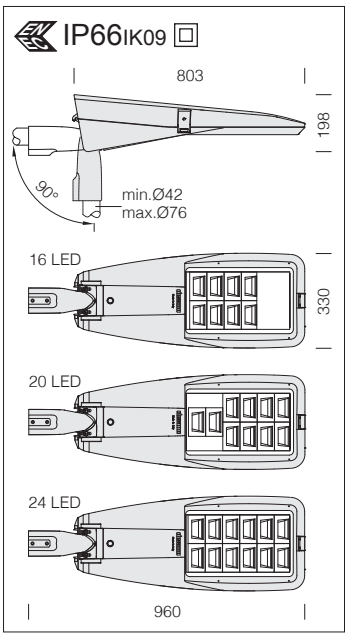



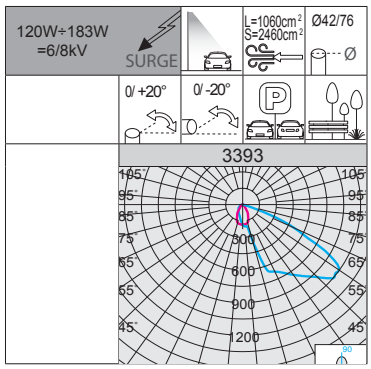

Optics: in aluminium coated with very high purity (99.99%) silver using physical vapour deposition (PVD).

LED: power factor ≥0.92.
Luminous flux maintenance 80%: 100.000h (L80B10).

3393 Sella 2 - asymmetric 60°

		CLD PROG			LUMEN OUTPUT (tq= 25 °C)
LED	colour	weight	code	W tot	K - ølm 640mA - CRI
LED	RAL 9006	11.40	330884-00	**120**	4000K - 16885lm - CRI 70
	RAL 7021		330880-00		
LED	RAL 9006	11.40	330884-39	**120**	3000K - 15956lm - CRI 70
	RAL 7021		330880-39		
LED	RAL 9006	11.40	330885-00	**152**	4000K - 21106lm - CRI 70
	RAL 7021		330881-00		
LED	RAL 9006	11.40	330885-39	**152**	3000K - 19945lm - CRI 70
	RAL 7021		330881-39		
LED	RAL 9006	11.40	330886-00	**183**	4000K - 25328lm - CRI 70
	RAL 7021		330882-00		
LED	RAL 9006	11.40	330886-39	**183**	3000K - 23934lm - CRI 70
	RAL 7021		330882-39		

ACCESSORIES

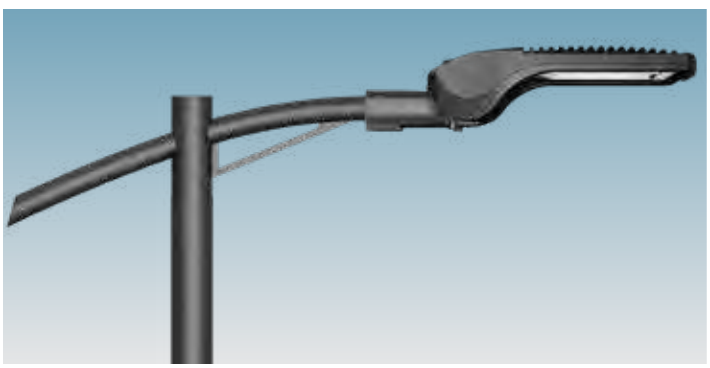

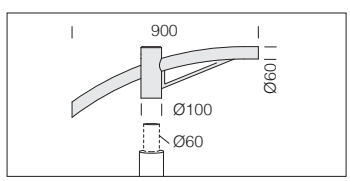

acc. 504 single arm	
anthrac.	991263-00
Suited for poles with a diameter 60mm.	

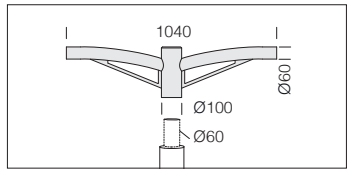

acc. 508 double arm	
anthrac.	991267-00
Suited for poles with a diameter 60mm.	

GENERAL CHARACTERISTICS

Housing and cover: in die-cast aluminium and designed with a very small surface exposed to wind. Cooling fins are integrated into the cover.

Heat sink: the heat dissipation system is specially designed and made to allow the operation of the LED lights with temperatures ensuring excellent performance/efficiency and durability.

Pole connection: in die-cast aluminium and with gaskets to secure the frame according to different inclinations. Adjustable ranges: between 0° and 15° for side mount; and between 0° and 10° for mast-top mounting. Inclination pace: 5°. Suited for poles with a diameter 46-76mm.

Diffuser: clear, tempered glass, 4 mm thick, resistant to thermal shock and impacts (UNI-EN 12150-1 : 2001)

Coating: the fully automated powder-coating cycle involves a polyester-based, salt-spray corrosion-resistant and UV-stabilised paint.

OTHER CHARACTERISTICS

Standard supply: automatic temperature control inside the device with automatic resetting. With dedicated electronic device to protect the LED module.

Equipment: complete with waterproof connector for quick installation. Supplied with double insulation switch that cuts off electricity when the cover is opened.



Electronic safety device to protect the LED module and the related ballast compliant with EN 61547.
It works in two modes:
- differential mode: surge between power cables and between the phase and neutral.
- common mode: surge between power, L/N and ground cables or between the fixture's body if it is of class II and installed on a metal pole.

OTHER INFORMATION



Product with a very low flicker; uniform light for greater eye protection.

Optical system: the modularity of the optical system, the solutions used for the electronic circuit design and the optimal control of operating temperatures, make the Mini Stelvio line a highly professional, flexible and reliable product, capable of guaranteeing huge application advantages in several situations.



The products of the Mini Stelvio family are compliant with all applicable tests (third-party certification) pursuant to standard **ANSI C136.31: Street Lighting – Luminaire Vibration.**
- Test level: 3.0G Level 2 for bridge/overpass applications.

UPON REQUEST



Protective coating recommended for marine environments within 5 km of the sea.

1750K **version with 1750K LED (subcode -44):** lamps with warm light at a colour temperature of 1750K are ideal for particularly dangerous areas (pedestrian crossings, entries, roundabouts, etc.) and to minimize the lighting's impact on the environment and on the fauna of green urban areas.



PROG (CLD PROG) AVAILABLE FUNCTIONS

Luminous flux setup	This can be done by programming the drive current values requested when ordering/purchasing the fixture
CLO (Constant Light Output)	The lighting fixture maintains a constant light output throughout its entire service life

LIGHTING POINT MANAGEMENT OPTIONS ON REQUEST

possibility to choose different lighting point management systems according to the system's needs:

1-10V dimming ordered with **sub-code -12**	Adjustment range from 10%-100% with 1-10V
Virtual Midnight order with **subcode -30**	Stand-alone system with automatic luminous flux reduction in **4 steps**. To increase energy savings at night when there are fewer people and vehicles around, a lighting fixture can be programmed according to a specific profile (customizable on request). The fixture reduces its luminous flux through a self-learning process which, depending on the previous switching on and off times, will determine a hypothetical "virtual midnight". This is the average value between the time the fixture is switched on (sunset) and switched off (sunrise). The "virtual midnight" is the reference point for dimming lights according to the desired profile. The device is integrated in the LED driver and therefore does not require any modification to the system. *In order for the system to function correctly, the system must be adjusted by a device that turns the system on and off on a regular basis every day.* ***ATTENTION:*** *original settings and time slots for the "virtual midnight" value can be customized in up to 5 steps upon request.*

Factory settings

Time	Flux
on ÷ 22:00	100%
22:00 ÷ 23:30	75%
23:30 ÷ 02:30	50%
02:30 ÷ 04:00	75%
04:00 ÷ off	100%

PLC remote control ordered with **sub-code -0078**	Point-to-point and system management and diagnosis system
For more information see page XX-XXIII	

Example with Zhaga Socket (subcode -0054)



LUMINAIRE DESIGNED FOR INSTALLATION ON NEMA OR ZHAGA SOCKET: to monitor and manage public lighting centrally, lighting fixtures will always be more equipped with wireless controls that will allow their integration with the IoT. Today the market offers two solutions: **NEMA and ZHAGA**. Both solutions offer an electrical and mechanical connection between the control antenna and the lighting fixture.

Nema Socket order with **subcode -40** (sealing cap to be ordered separately)	Mounted directly on the fixture's body, ideal for remote lighting management applications.
Zhaga Socket order with **subcode -0054** (complete with sealing cap)	

RG0 Ethr | +40 C° -30 | U.V. | LOW FLICKER | 3000K | 4000K

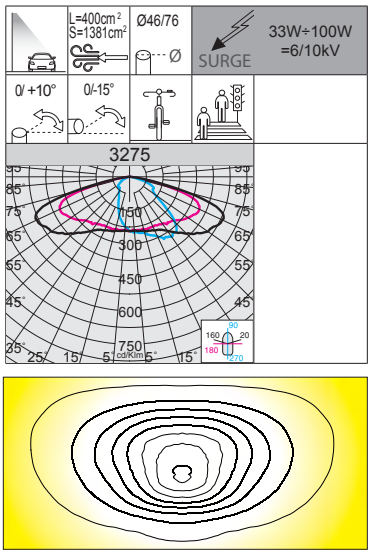

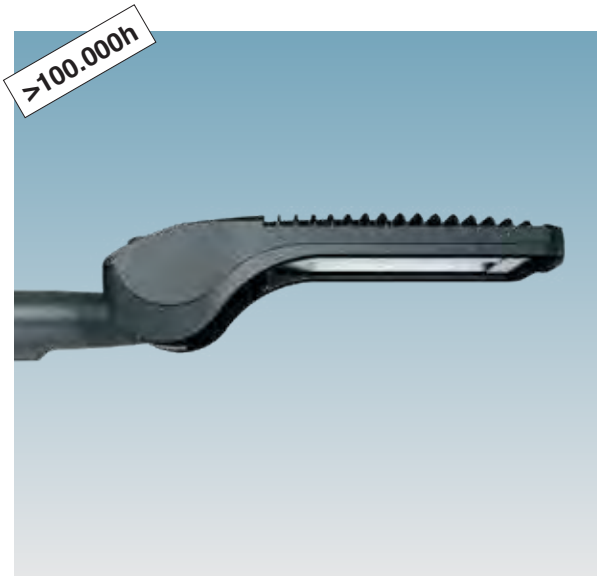

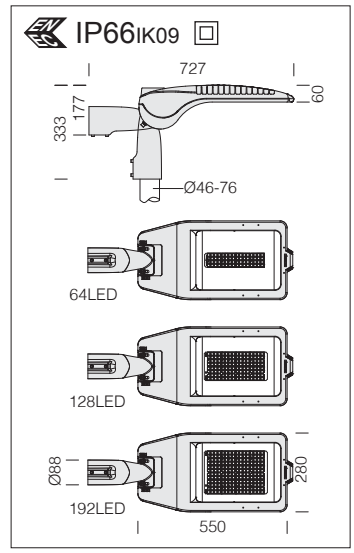

3275 Mini Stelvio plus

		CLD PROG			LUMEN OUTPUT (tq= 25 °C)
LED	colour	weight	code	W tot	K - ølm 660mA - CRI
LED	RAL 7021	8.00	330360-00	**33**	4000K - 4438lm - CRI>70
			330360-39		3000K - 4216lm - CRI>70
LED	RAL 7021	8.00	330361-00	**67**	4000K - 8620lm - CRI>70
			330361-39		3000K - 8189lm - CRI>70
LED	RAL 7021	8.00	330362-00	**100**	4000K - 12928lm - CRI>70
			330362-39		3000K - 12282lm - CRI>70

Optics: in PMMA, highly resistant to temperature and UV radiation.

LED: power factor ≥0.9.
Luminous flux maintenance 80%: >100.000h (L80B10).

Example	Power supply	n.LED	W tot	K	ølm
upon request	310mA	64	**16**	**4000K**	2341lm
		128	**32**		4547lm
		192	**48**		6820lm
upon request	500mA	64	**25**	**4000K**	3373lm
		128	**50**		6551lm
		192	**75**		9825lm

n.LED	W tot	K	ølm
64	**16**	**3000K**	2224lm
128	**32**		4320lm
192	**48**		6479lm
64	**25**	**3000K**	3204lm
128	**50**		6224lm
192	**75**		9334lm

RG0 Ethr | +40 C° -30 | U.V. | LOW FLICKER | 3000K | 4000K

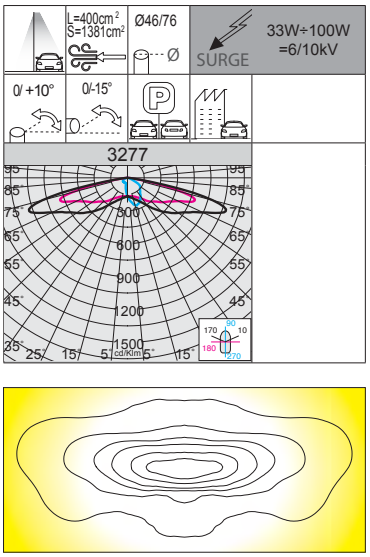



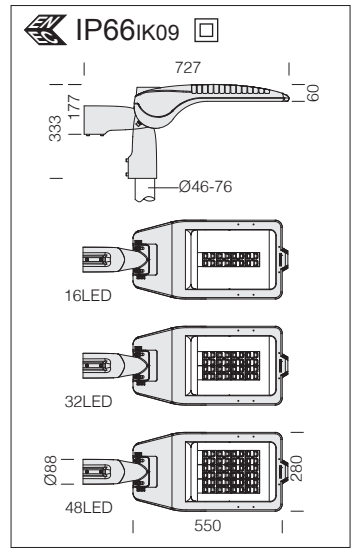

3277 Mini Stelvio Fx T2

		CLD PROG			LUMEN OUTPUT (tq= 25 °C)
LED	colour	weight	code	W tot	K - ølm 700mA - CRI
LED	RAL 7021	8.00	330380-00	**33**	4000K - 5140lm - CRI>70
			330380-39		3000K - 4882lm - CRI>70
LED	RAL 7021	8.00	330381-00	**67**	4000K - 9831lm - CRI>70
			330381-39		3000K - 9546lm - CRI>70
LED	RAL 7021	8.00	330383-00	**100**	4000K - 15210lm - CRI>70
			330383-39		3000K - 14446lm - CRI>70

Optics: in PMMA, highly resistant to temperature and UV radiation.

LED: power factor ≥0.9.
Luminous flux maintenance 80%: >100.000h (L80B10).

Example	Power supply	n.LED	W tot	K	ølm
upon request	350mA	16	**16**	**4000K**	2724lm
		32	**32**		5210lm
		48	**48**		8061lm
upon request	530mA	16	**25**	**4000K**	4112lm
		32	**50**		7865lm
		48	**75**		12168lm

n.LED	W tot	K	ølm
16	**16**	**3000K**	2587lm
32	**32**		5059lm
48	**48**		7656lm
16	**25**	**3000K**	3906lm
32	**50**		7637lm
48	**75**		11557lm

IP66 IK09

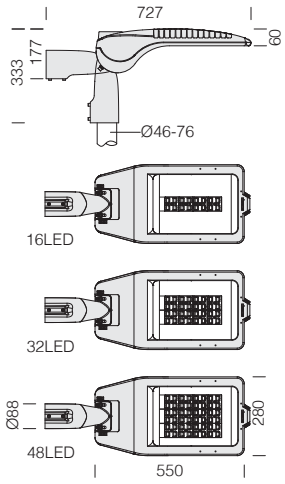

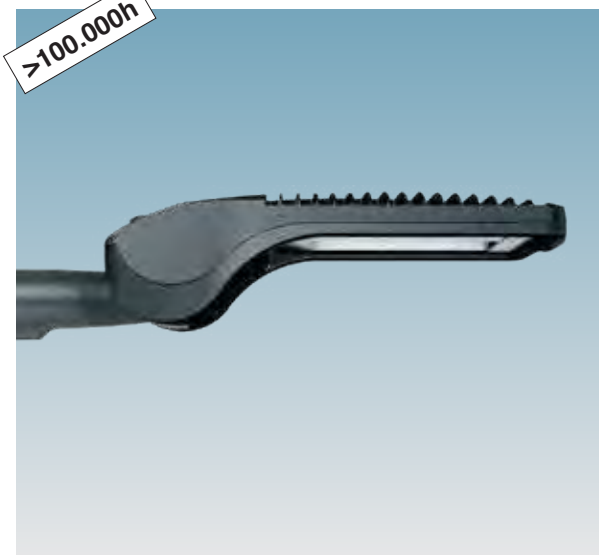

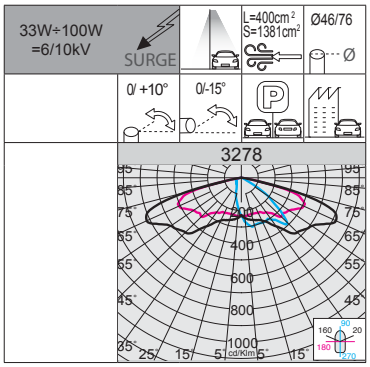

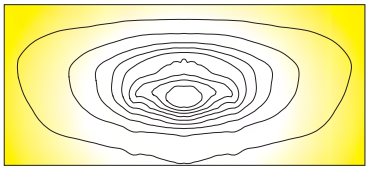

RG0 Ethr
+40 C° -30
U.V.
LOW FLICKER
3000K
4000K

Optics: in PMMA, highly resistant to temperature and UV radiation.

LED: power factor ≥0.9.
Luminous flux maintenance 80%: >100.000h (L80B10).

3278 Mini Stelvio Fx T3

		CLD PROG			LUMEN OUTPUT (tq= 25 °C)
LED	colour	weight	code	W tot	K - ølm 700mA - CRI
LED	RAL 7021	8.00	330390-00	**33**	4000K - 5464lm - CRI>70
			330390-39		3000K - 5190lm - CRI>70
LED	RAL 7021	8.00	330391-00	**67**	4000K - 10837lm - CRI>70
			330391-39		3000K - 10295lm - CRI>70
LED	RAL 7021	8.00	330393-00	**100**	4000K - 16392lm - CRI>70
			330393-39		3000K - 15084lm - CRI>70

Example	Power supply	n.LED	W tot	K	ølm
upon request	350mA	16	**16**	**4000K**	2896lm
		32	**32**		5744lm
		48	**48**		8688lm
upon request	530mA	16	**25**	**4000K**	4371lm
		32	**50**		8670lm
		48	**75**		13114lm

n.LED	W tot	K	ølm
16	**16**	**3000K**	2751lm
32	**32**		5456lm
48	**48**		7995lm
16	**25**	**3000K**	4152lm
32	**50**		8236lm
48	**75**		12067lm

IP66 IK09

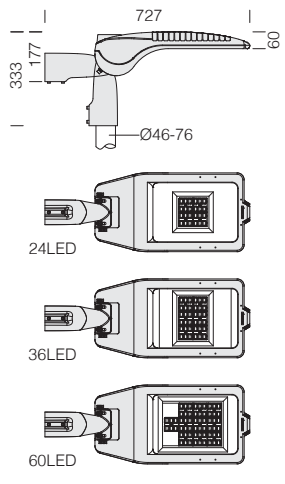

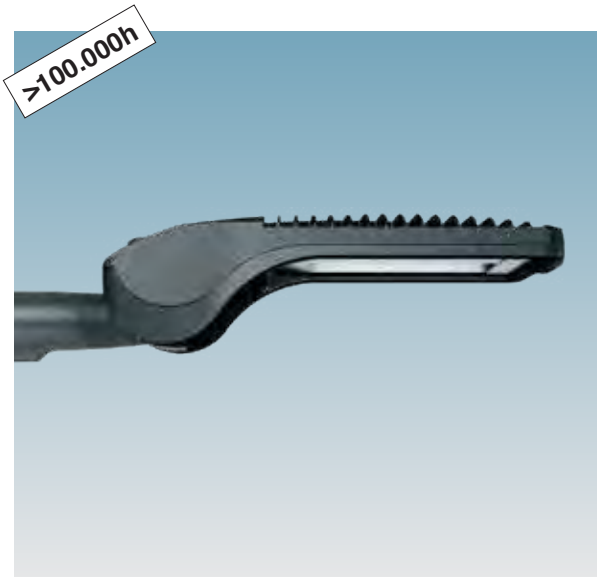

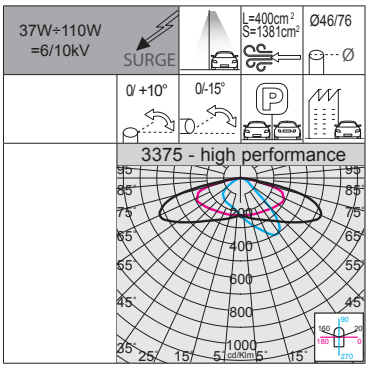

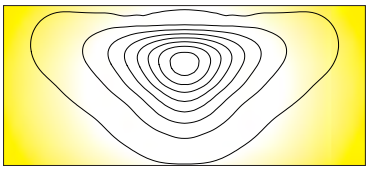

RG0 Ethr
+40 C° -30
U.V.
LOW FLICKER
3000K
4000K

Optics: in PMMA, highly resistant to temperature and UV radiation.

LED: power factor ≥0.9.
Luminous flux maintenance 90%: >100.000h (L90B10).

3375 Mini Stelvio HP - HIGH PERFORMANCE

		CLD PROG			LUMEN OUTPUT (tq= 25 °C)
LED	colour	weight	code	W tot	K - ølm - CRI
LED	RAL 7021	8.00	340200-00	**37**	4000K - 5673lm - CRI>70
			340200-39		3000K - 5389lm - CRI>70
LED	RAL 7021	8.00	340201-00	**56**	4000K - 8751lm - CRI>70
			340201-39		3000K - 8313lm - CRI>70
LED	RAL 7021	8.00	340202-00	**94**	4000K - 14390lm - CRI>70
			340202-39		3000K - 13670lm - CRI>70
LED	RAL 7021	8.00	340203-00	**110**	4000K - 17097lm - CRI>70
			340203-39		3000K - 16242lm - CRI>70



ACCESSORIES

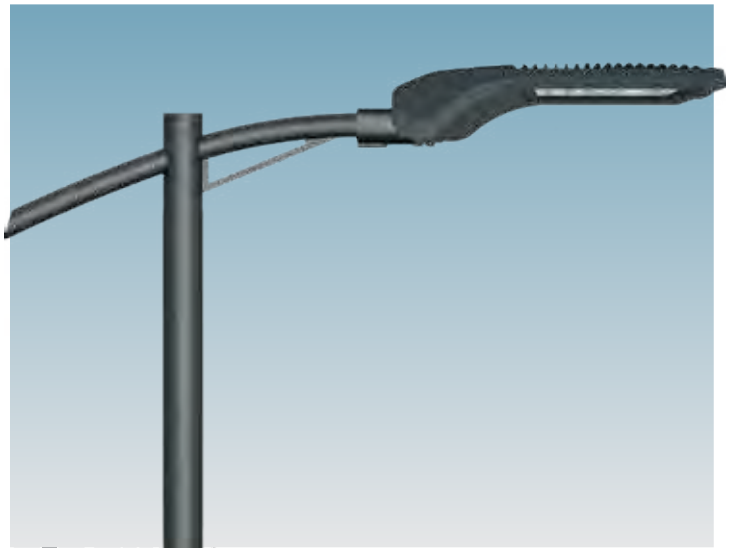

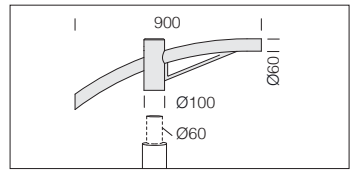

acc. 504 single arm	
anthrac.	991263-00
Suited for poles with a diameter 60mm.	

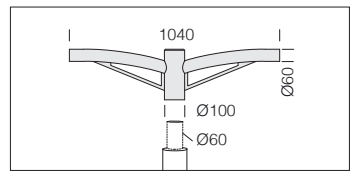

acc. 508 double arm	
anthrac.	991267-00
Suited for poles with a diameter 60mm.	

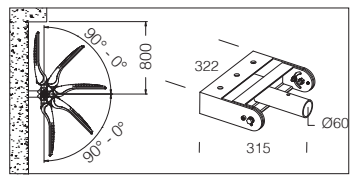

acc. 578 adjustable bracket	
anthrac.	997709-00
Adjustable bracket for wall mounting or for use on the towers.	

GENERAL CHARACTERISTICS

Housing and cover: in die-cast aluminium and designed with a very small surface exposed to wind. Cooling fins are integrated into the cover.

Heat sink: the heat dissipation system is specially designed and made to allow the operation of the LED lights with temperatures ensuring excellent performance/efficiency and durability.

Pole connection: in die-cast aluminium and with gaskets to secure the frame according to different inclinations. Adjustable ranges: between 0° and 15° for side mount; and between 0° and 10° for mast-top mounting. Inclination pace: 5°. Suited for poles with a diameter 46-76mm.

Diffuser: clear, tempered glass, 4 mm thick, resistant to thermal shock and impacts (UNI-EN 12150-1 : 2001)

Coating: the fully automated powder-coating cycle involves a polyester-based, salt-spray corrosion-resistant and UV-stabilised paint.

OTHER CHARACTERISTICS

Standard supply: automatic temperature control inside the device with automatic resetting. With dedicated electronic device to protect the LED module.

Equipment: complete with waterproof connector for quick installation. Supplied with double insulation switch that cuts off electricity when the cover is opened.



Electronic safety device to protect the LED module and the related ballast compliant with EN 61547.
It works in two modes:
- differential mode: surge between power cables and between the phase and neutral.
- common mode: surge between power, L/N and ground cables or between the fixture's body if it is of class II and installed on a metal pole.

OTHER INFORMATION



Product with a very low flicker; uniform light for greater eye protection.

Optical system: the modularity of the optical system, the solutions used for the electronic circuit design and the optimal control of operating temperatures, make the Mini Stelvio line a highly professional, flexible and reliable product, capable of guaranteeing huge application advantages in several situations.



The products of the Stelvio family are compliant with all applicable tests (third-party certification) pursuant to standard **ANSI C136.31: Street Lighting – Luminaire Vibration.**
- Test level: 3.0G Level 2 for bridge/overpass applications.

UPON REQUEST



Protective coating recommended for marine environments within 5 km of the sea.



PROG (CLD PROG) AVAILABLE FUNCTIONS

Luminous flux setup	This can be done by programming the drive current values requested when ordering/purchasing the fixture
CLO (Constant Light Output)	The lighting fixture maintains a constant light output throughout its entire service life

LIGHTING POINT MANAGEMENT OPTIONS ON REQUEST

possibility to choose different lighting point management systems according to the system's needs:

1-10V dimming ordered with **sub-code -12**	Adjustment range from 10%-100% with 1-10V
Virtual Midnight order with **subcode -30**	Stand-alone system with automatic luminous flux reduction in **4 steps**. To increase energy savings at night when there are fewer people and vehicles around, a lighting fixture can be programmed according to a specific profile (customizable on request). The fixture reduces its luminous flux through a self-learning process which, depending on the previous switching on and off times, will determine a hypothetical "virtual midnight". This is the average value between the time the fixture is switched on (sunset) and switched off (sunrise). The "virtual midnight" is the reference point for dimming lights according to the desired profile. The device is integrated in the LED driver and therefore does not require any modification to the system. *In order for the system to function correctly, the system must be adjusted by a device that turns the system on and off on a regular basis every day.* ***ATTENTION:** original settings and time slots for the "virtual midnight" value can be customized in up to 5 steps upon request.*

Factory settings	
Time	**Flux**
on ÷ 22:00	100%
22:00 ÷ 23:30	75%
23:30 ÷ 02:30	50%
02:30 ÷ 04:00	75%
04:00 ÷ off	100%

PLC remote control ordered with **sub-code -0078**	Point-to-point and system management and diagnosis system
For more information see page XX-XXIII	

Example with Zhaga Socket (subcode -0054)



LUMINAIRE DESIGNED FOR INSTALLATION ON NEMA OR ZHAGA SOCKET: to monitor and manage public lighting centrally, lighting fixtures will always be more equipped with wireless controls that will allow their integration with the IoT. Today the market offers two solutions: **NEMA and ZHAGA**. Both solutions offer an electrical and mechanical connection between the control antenna and the lighting fixture.

Nema Socket order with **subcode -40** (sealing cap to be ordered separately)	Mounted directly on the fixture's body, ideal for remote lighting management applications.
Zhaga Socket order with **subcode -0054** (complete with sealing cap)	

RG0 Ethr | +40 C° -30 | U.V. | LOW FLICKER | 3000K | 4000K

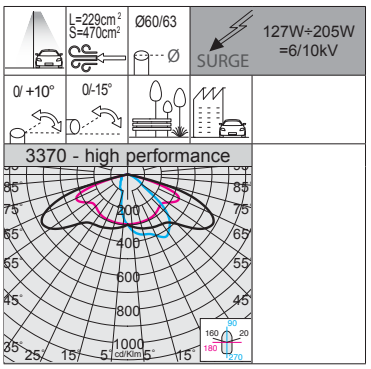



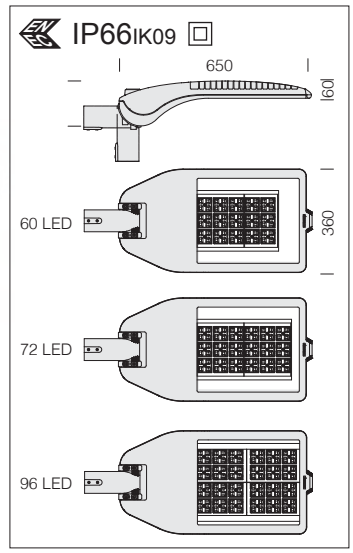

3370 Stelvio HP - HIGH PERFORMANCE

		CLD PROG			LUMEN OUTPUT (tq= 25 °C)
LED	colour	weight	code	W tot	K - ølm - CRI
LED	RAL 7021	10.50	340250-00	**127**	4000K - 16892lm - CRI>70
			340250-39		3000K - 15710lm - CRI>70
LED	RAL 7021	10.50	340251-00	**152**	4000K - 20594lm - CRI>70
			340251-39		3000K - 19152lm - CRI>70
LED	RAL 7021	11.40	340252-00	**205**	4000K - 27458lm - CRI>70
			340252-39		3000K - 25536lm - CRI>70

Optics: in PMMA, highly resistant to temperature and UV radiation.

LED: power factor ≥0.9.
Luminous flux maintenance 80%: 80.000h (L80B20).

RG0 Ethr | +40 C° -30 | U.V. | LOW FLICKER | 3000K | 4000K

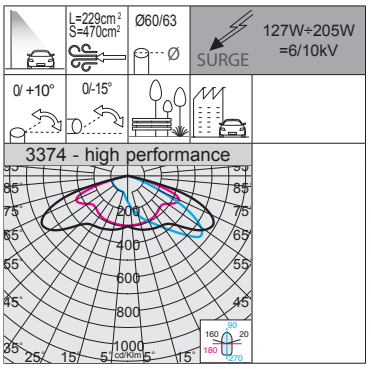



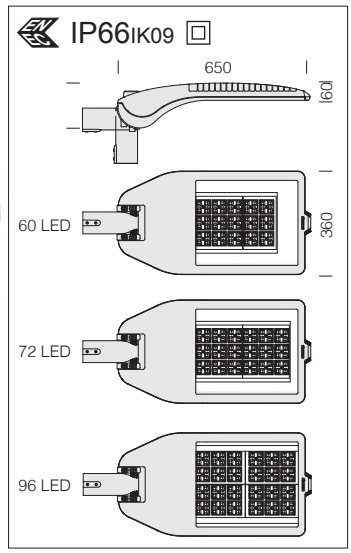

3374 Stelvio HP - HIGH PERFORMANCE - large areas

		CLD PROG			LUMEN OUTPUT (tq= 25 °C)
LED	colour	weight	code	W tot	K - ølm - CRI
LED	RAL 7021	10.50	340260-00	**127**	4000K - 16348lm - CRI>70
			340260-39		3000K - 15204lm - CRI>70
LED	RAL 7021	10.50	340261-00	**152**	4000K - 19920lm - CRI>70
			340261-39		3000K - 18526lm - CRI>70
LED	RAL 7021	11.40	340262-00	**205**	4000K - 26560lm - CRI>70
			340262-39		3000K - 24701lm - CRI>70

Optics: in PMMA, highly resistant to temperature and UV radiation.

LED: power factor ≥0.9.
Luminous flux maintenance 80%: 80.000h (L80B20).

IP66 IK09

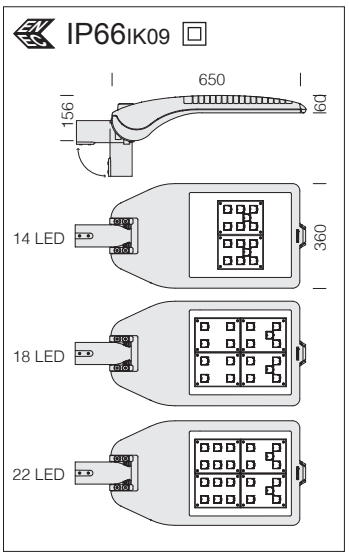



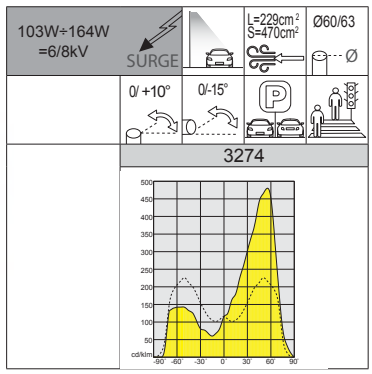

RGO Ethr
+40 C° -30
U.V.
LOW FLICKER
3000K
4000K

Optics: in PMMA, highly resistant to temperature and UV radiation. Flow recovery in V2 polycarbonate.

LED: power factor ≥0.9.
Luminous flux maintenance 80%: >100.000h (L80B10).

3274 - Stelvio 2 plus - asymmetric

		CLD PROG			LUMEN OUTPUT (tq= 25 °C)
LED	colour	weight	code	W tot	K - ølm 600mA - CRI
LED	RAL 7021	10.50	320360-00	**103**	4000K - 14127lm - CRI>70
			320360-39		3000K - 13185lm - CRI>70
LED	RAL 7021	10.50	320361-00	**133**	4000K - 18142lm - CRI>70
			320361-39		3000K - 16932lm - CRI>70
LED	RAL 7021	11.40	320363-00	**164**	4000K - 22172lm - CRI>70
			320363-39		3000K - 20693lm - CRI>70

Example	Power supply	n.LED	W tot	K	ølm
upon request	300mA	14	**49**	**4000K**	7452lm
		18	**63**		9570lm
		22	**78**		11696lm
upon request	410mA	14	**68**	**4000K**	9889lm
		18	**88**		12699lm
		22	**108**		15520lm

n.LED	W tot	K	ølm
14	**49**	**3000K**	6955lm
18	**63**		8932lm
22	**78**		10916lm
14	**68**	**3000K**	9229lm
18	**88**		11852lm
22	**108**		14485lm

IP66 IK09

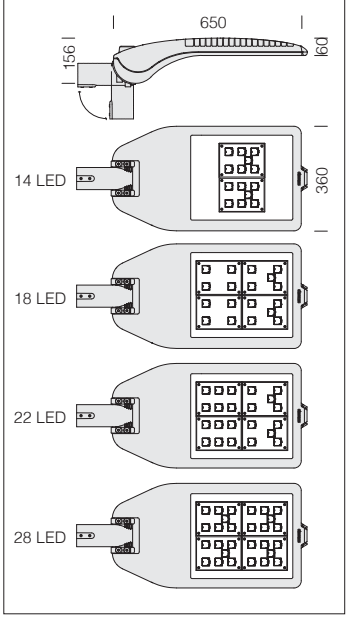



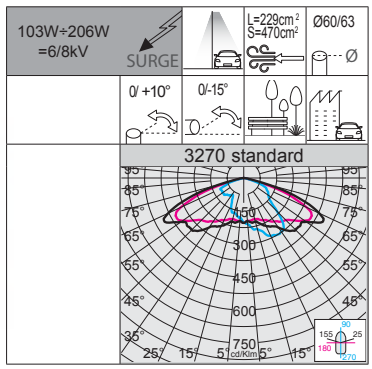

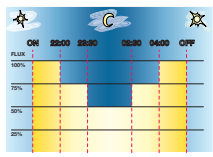

Sub-code -30: version with **virtual midnight**.

RGO Ethr
+40 C° -30
U.V.
LOW FLICKER
3000K
4000K

Optics: in PMMA, highly resistant to temperature and UV radiation. Flow recovery in V2 polycarbonate.

LED: power factor ≥0.9.
Luminous flux maintenance 80%: >100.000h (L80B10).

3270 - Stelvio 1 plus

		CLD PROG		CLD PROG		LUMEN OUTPUT (tq= 25 °C)
LED	colour	weight	code	code	W tot	K - ølm 600mA - CRI
LED	RAL 7021	10.50	330342-00	330342-30	**103**	4000K - 13845lm - CRI>70
			330342-39			3000K - 12922lm - CRI>70
LED	RAL 7021	10.50	330348-00	330348-30	**133**	4000K - 17800lm - CRI>70
			330348-39			3000K - 16613lm - CRI>70
LED	RAL 7021	11.40	330343-00	330343-30	**164**	4000K - 21754lm - CRI>70
			330343-39			3000K - 20303lm - CRI>70
LED	RAL 7021	11.40	330349-00	330349-30	**206**	4000K - 27414lm - CRI>70
			330349-39			3000K - 25585lm - CRI>70

Example	Power supply	n.LED	W tot	K	ølm
upon request	300mA	14	**49**	**4000K**	7303lm
		18	**63**		9390lm
		22	**78**		11475lm
		28	**100**		14461lm
upon request	410mA	14	**68**	**4000K**	9692lm
		18	**88**		12460lm
		22	**108**		15228lm
		28	**137**		19190lm

n.LED	W tot	K	ølm
14	**49**	**3000K**	6816lm
18	**63**		8763lm
22	**78**		10710lm
28	**100**		13496lm
14	**68**	**3000K**	9045lm
18	**88**		11629lm
22	**108**		14212lm
28	**137**		17910lm

ACCESSORIES



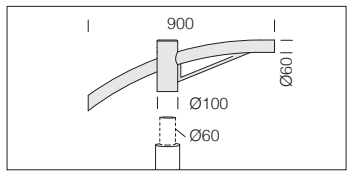

acc. 504 single arm	
RAL 9006	991262-00
Suited for poles with a diameter 60mm.	

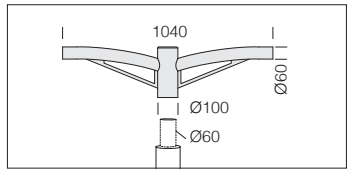

acc. 508 double arm	
RAL 9006	991266-00
Suited for poles with a diameter 60mm.	

GENERAL CHARACTERISTICS

Housing and cover: in die-cast aluminium and designed with a very small surface exposed to wind. Cooling fins are integrated into the cover.

Heat sink: the heat dissipation system is specially designed and made to allow the operation of the LED lights with temperatures ensuring excellent performance/efficiency and durability.

Pole connection: in die-cast aluminium and with gaskets to secure the frame according to different inclinations. Adjustable ranges: between 0° and 20° for side mount; and between 0° and 15° for mast-top mounting. Inclination pace: 5°. Suited for poles with a diameter 46-76.

Diffuser: clear, tempered glass, 4 mm thick, resistant to thermal shock and impacts (UNI-EN 12150-1 : 2001)

Coating: the fully automated powder-coating cycle involves a polyester-based, salt-spray corrosion-resistant and UV-stabilised paint. The ROLLE 2.0 luminaire **is declared** to have passed the 1000 hours of salt corrosion resistance test in accordance with ASTM B 117 standard.

OTHER CHARACTERISTICS

Standard supply: automatic temperature control inside the device with automatic resetting. With dedicated electronic device to protect the LED module. Complete with waterproof connector for quick installation.



Electronic safety device to protect the LED module and the related ballast compliant with EN 61547.
It works in two modes:
- differential mode: surge between power cables and between the phase and neutral.
- common mode: surge between power, L/N and ground cables or between the fixture's body if it is of class II and installed on a metal pole.



The products of the Rolle 2.0 family are compliant with all applicable tests (third-party certification) pursuant to standard **ANSI C136.31: Street Lighting – Luminaire Vibration.** - Test level: 3.0G Level 2 for bridge/overpass applications.

OTHER INFORMATION

Optical system: the modularity of the optical system and the solutions used for the electronic circuit design, make the Rolle line a highly professional, flexible and reliable product, capable of guaranteeing huge application advantages in several situations.

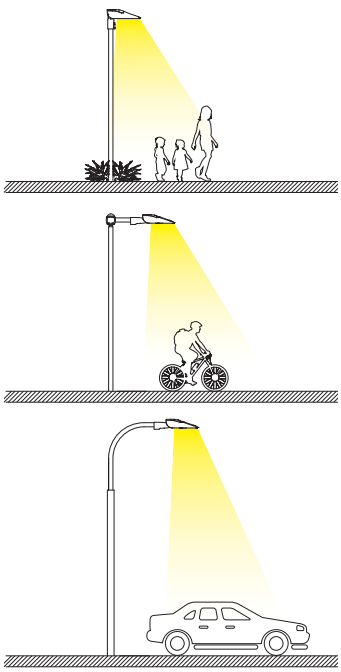

UPON REQUEST



Protective coating recommended for marine environments within 5 km of the sea.





CUT-OFF accessory (HP versions excluded): ideal for **blocking backlight and eliminating potential intensity peak behind the light pole**; available in either white or black shades *(NOTE: the black version will block backlight best, while the white version will enable greater efficiency).*



NO BACKLIGHT

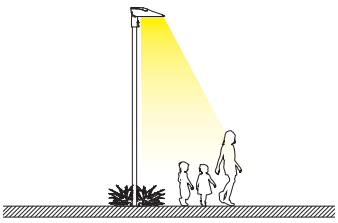



PROG (CLD PROG) AVAILABLE FUNCTIONS

Luminous flux setup	This can be done by programming the drive current values requested when ordering/purchasing the fixture
CLO (Constant Light Output)	The lighting fixture maintains a constant light output throughout its entire service life

LIGHTING POINT MANAGEMENT OPTIONS ON REQUEST
possibility to choose different lighting point management systems according to the system's needs:

1-10V dimming ordered with **sub-code -12**	Adjustment range from 10%-100% with 1-10V
Virtual Midnight order with **subcode -30**	Stand-alone system with automatic luminous flux reduction in **4 steps**. To increase energy savings at night when there are fewer people and vehicles around, a lighting fixture can be programmed according to a specific profile (customizable on request). The fixture reduces its luminous flux through a self-learning process which, depending on the previous switching on and off times, will determine a hypothetical "virtual midnight". This is the average value between the time the fixture is switched on (sunset) and switched off (sunrise). The "virtual midnight" is the reference point for dimming lights according to the desired profile. The device is integrated in the LED driver and therefore does not require any modification to the system. *In order for the system to function correctly, the system must be adjusted by a device that turns the system on and off on a regular basis every day.* ***ATTENTION:*** *original settings and time slots for the "virtual midnight" value can be customized in up to 5 steps upon request.*
PLC remote control ordered with **sub-code -0078**	Point-to-point and system management and diagnosis system

Factory settings

Time	Flux
on ÷ 22:00	100%
22:00 ÷ 23:30	75%
23:30 ÷ 02:30	50%
02:30 ÷ 04:00	75%
04:00 ÷ off	100%

For more information see page XX-XXIII

Example with Zhaga Socket (subcode -0054)



LUMINAIRE DESIGNED FOR INSTALLATION ON NEMA OR ZHAGA SOCKET: to monitor and manage public lighting centrally, lighting fixtures will always be more equipped with wireless controls that will allow their integration with the IoT. Today the market offers two solutions: **NEMA and ZHAGA**. Both solutions offer an electrical and mechanical connection between the control antenna and the lighting fixture.

Nema Socket order with **subcode -40** (sealing cap to be ordered separately)	Mounted directly on the fixture's body, ideal for remote lighting management applications.
Zhaga Socket order with **subcode -0054** (complete with sealing cap)	

RG0 Ethr
+40 C° -30
U.V.
LOW FLICKER
3000K
4000K

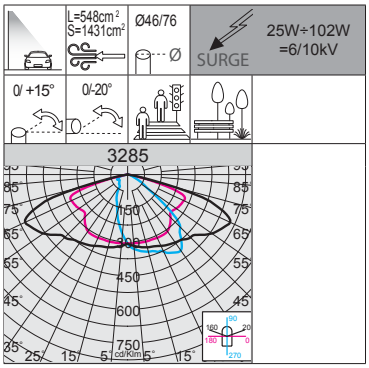

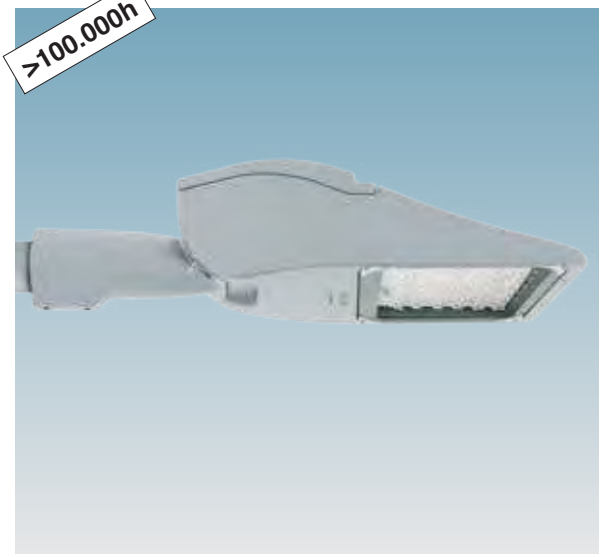

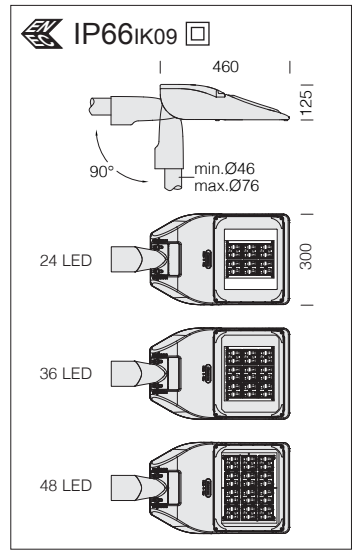

*** On request:** available ideal version for pedestrian crossing (left and right).

3285 Rolle HP - HIGH PERFORMANCE					
		CLD PROG			LUMEN OUTPUT (tq= 25 °C)
LED	colour	weight	code	W tot	K - ølm - CRI
LED	RAL 9006	7.60	340100-00	**25**	4000K - 4346lm - CRI 70
			340100-39		3000K - 4287lm - CRI 70
LED	RAL 9006	7.60	340101-00	**45**	4000K - 7412lm - CRI 70
			340101-39		3000K - 7266lm - CRI 70
LED	RAL 9006	7.60	340102-00	**78**	4000K - 11561lm - CRI 70
			340102-39		3000K - 11221lm - CRI 70
LED *	RAL 9006	7.60	340103-00	**102**	4000K - 15415lm - CRI 70
			340103-39		3000K - 13828lm - CRI 70

Optics: in PMMA, highly resistant to temperature and UV radiation.

LED: power factor ≥0,9.
Luminous flux maintenance 90%: >100.000h (L90B10).

RG0 Ethr
+40 C° -30
U.V.
LOW FLICKER
3000K
4000K

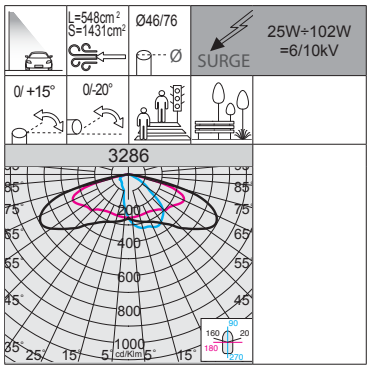



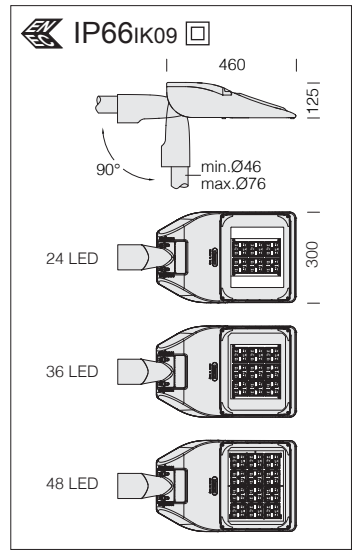

*** On request:** available ideal version for pedestrian crossing (left and right).

3286 Rolle HP - HIGH PERFORMANCE					
		CLD PROG			LUMEN OUTPUT (tq= 25 °C)
LED	colour	weight	code	W tot	K - ølm - CRI
LED	RAL 9006	7.60	340110-00	**25**	4000K - 4229lm - CRI 70
			340110-39		3000K - 4172lm - CRI 70
LED	RAL 9006	7.60	340111-00	**45**	4000K - 7212lm - CRI 70
			340111-39		3000K - 7071lm - CRI 70
LED	RAL 9006	7.60	340112-00	**78**	4000K - 11251lm - CRI 70
			340112-39		3000K - 10920lm - CRI 70
LED *	RAL 9006	7.60	340113-00	**102**	4000K - 15001lm - CRI 70
			340113-39		3000K - 13033lm - CRI 70

Optics: in PMMA, highly resistant to temperature and UV radiation.

LED: power factor ≥0,9.
Luminous flux maintenance 90%: >100.000h (L90B10).

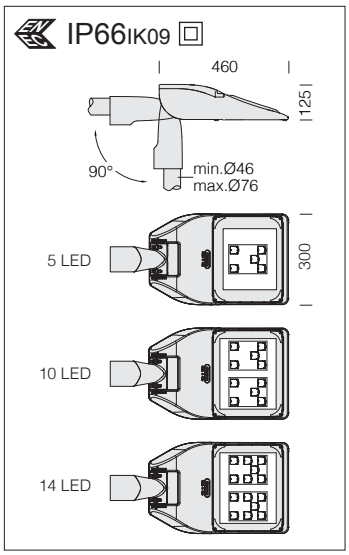



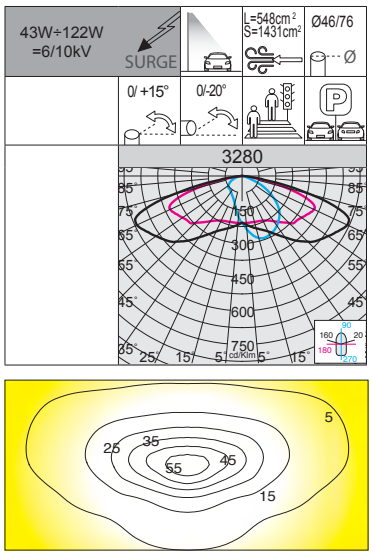

RG0 Ethr

+40 C° -30

U.V.

LOW FLICKER

3000K

4000K

Optics: in PMMA, highly resistant to temperature and UV radiation. Flow recovery in V2 polycarbonate.

LED: power factor ≥0,9.
Luminous flux maintenance 90%: >100.000h (L90B10).

3280 Rolle - T1

		CLD PROG			LUMEN OUTPUT (tq= 25 °C)
LED	colour	weight	code	W tot	K - ølm 700mA - CRI
LED	RAL 9006	7.60	330400-00	**43**	4000K - 5826lm - CRI 70
			330400-39		4000K - 5437lm - CRI 70
LED	RAL 9006	7.60	330401-00	**87**	4000K - 11096lm - CRI 70
			330401-39		3000K - 10356lm - CRI 70
LED	RAL 9006	7.60	330402-00	**122**	4000K - 15535lm - CRI 70
			330402-39		3000K - 14499lm - CRI 70

Example	Power supply	n.LED	W tot	K	ølm
upon request	350mA	5	**22**	**4000K**	3146lm
		10	**44**		5992lm
		14	**60**		8389lm
upon request	530mA	5	**33**	**4000K**	4544lm
		10	**65**		8655lm
		14	**91**		12117lm

n.LED	W tot	K	ølm
5	**22**	**3000K**	2936lm
10	**44**		5593lm
14	**60**		7830lm
5	**33**	**3000K**	4241lm
10	**65**		8078lm
14	**91**		11309lm

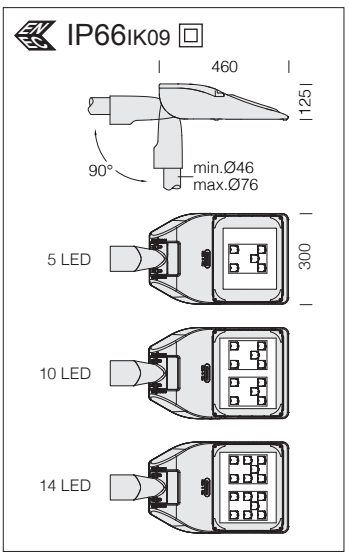



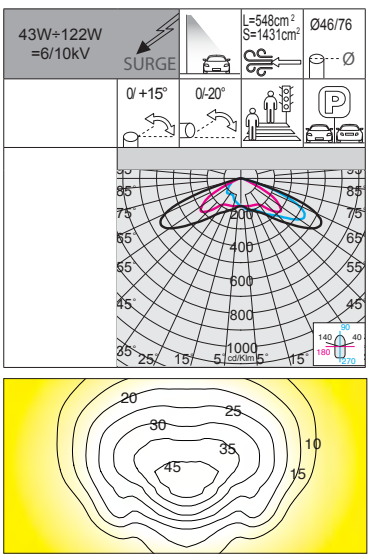

RG0 Ethr

+40 C° -30

U.V.

LOW FLICKER

3000K

4000K

Optics: in PMMA, highly resistant to temperature and UV radiation. Flow recovery in V2 polycarbonate.

LED: power factor ≥0,9.
Luminous flux maintenance 90%: >100.000h (L90B10).

3283 Rolle - T4

		CLD PROG			LUMEN OUTPUT (tq= 25 °C)
LED	colour	weight	code	W tot	K - ølm 700mA - CRI
LED	RAL 9006	7.60	330430-00	**43**	4000K - 6082lm - CRI 70
			330430-39		3000K - 5676lm - CRI 70
LED	RAL 9006	7.60	330431-00	**87**	4000K - 11585lm - CRI 70
			330431-39		3000K - 10812lm - CRI 70
LED	RAL 9006	7.60	330432-00	**122**	4000K - 16218lm - CRI 70
			330432-39		3000K - 15137lm - CRI 70

Example	Power supply	n.LED	W tot	K	ølm
upon request	350mA	5	**22**	**4000K**	3284lm
		10	**44**		6256lm
		14	**60**		8758lm
upon request	530mA	5	**33**	**4000K**	4744lm
		10	**65**		9036lm
		14	**91**		12650lm

n.LED	W tot	K	ølm
5	**22**	**3000K**	3065lm
10	**44**		5839lm
14	**60**		8174lm
5	**33**	**3000K**	4428lm
10	**65**		8434lm
14	**91**		11807lm



ACCESSORIES



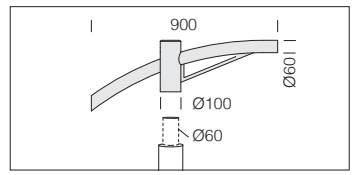

acc. 504 single arm	
RAL 9006	991262-00
Suited for poles with a diameter 60mm.	

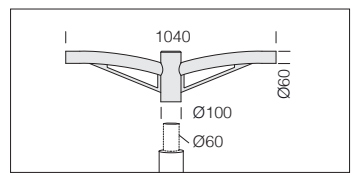

acc. 508 double arm	
RAL 9006	991266-00
Suited for poles with a diameter 60mm.	

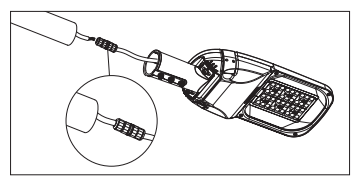

acc. 339 Connector	
2P	993836-00
To be purchased to facilitate the connection of the fixture to mains system.	

DENIA PRO - DENIA ES 3 with pole connection suited for poles with a diameter 46/76mm.
On request DENIA ES 1 - 2 with sub-code **-93**, version with pole connection suited for poles with a diameter 46/76mm.

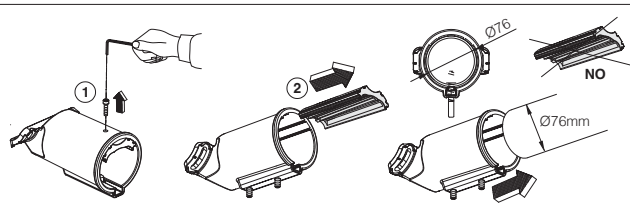

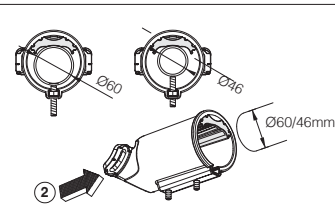

GENERAL CHARACTERISTICS

Housing: in die-cast aluminium and designed with a very small surface exposed to wind.

Pole connection: in die-cast aluminium, adjustable ranges Denia ES: between -15° and +5/10° for side mount and between 0° and +10/15° for mast-top mounting. Denia PRO: between -20° and +10° for side mount and between 0° and +20° for mast-top mounting. Inclination pace: 5°. Suited for poles with a diameter between 46 and 76mm.

Optics: in PMMA, highly resistant to temperature and UV radiation.

Diffuser: clear, tempered glass, 4 mm thick, resistant to thermal shock and impacts (UNI-EN 12150-1 : 2001).

Coating: the fully automated powder-coating cycle involves a polyester-based, salt-spray corrosion-resistant and UV-stabilised paint.

Upon request: protective coating recommended for marine environments within 5 km of the sea.

Standard supply: automatic temperature control inside the device with automatic resetting. With dedicated electronic device to protect the LED module.

OTHER CHARACTERISTICS

SURGE Electronic safety device to protect the LED module and the related ballast compliant with EN 61547.
It works in two modes:
- differential mode: surge between power cables and between the phase and neutral.
- common mode: surge between power, L/N and ground cables or between the fixture's body if it is of class II and installed on a metal pole.

The products of the Denia family are compliant with all applicable tests (third-party certification) pursuant to standard **ANSI C136.31: Street Lighting – Luminaire Vibration.**
- Test level: 3.0G Level 2 for bridge/overpass applications.

The ENEC Plus mark certifies that the LED luminaires are compliant and reliable in terms of safety and declared performance.

LOW FLICKER Product with a very low flicker; uniform light for greater eye protection.

OTHER INFORMATION



CUT-OFF accessory (for LM-LW-ME versions): ideal for **blocking backlight and eliminating potential intensity peak behind the light pole**; available in either white or black shades *(NOTE: the black version will block backlight best, while the white version will enable greater efficiency).*

NO BACKLIGHT

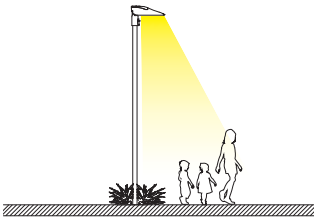



PRODUCT CODE STRUCTURE

The product code of the Denia range consists of alphanumeric characters that indicate the product's technical features and is structured as follows:

standard code	equipment	current (I out)	optics type
340050	00	0080	T2C

LM: road projects L/H<1
ME: road projects L/H=1
LW: road projects L/H>1
T2C: cycle lane
T3: street lighing
LP: low-pole
FTW60: large areas
PD: right pedestrian crossings
PS: left pedestrian crossings

CLD PROG

PROG (CLD PROG) AVAILABLE FUNCTIONS

Luminous flux setup	This can be done by programming the drive current values requested when ordering/purchasing the fixture
CLO (Constant Light Output)	The lighting fixture maintains a constant light output throughout its entire service life

LIGHTING POINT MANAGEMENT OPTIONS ON REQUEST

possibility to choose different lighting point management systems according to the system's needs:

1-10V dimming ordered with **sub-code -12**	Adjustment range from 10%-100% with 1-10V
Virtual Midnight order with **subcode -30**	Stand-alone system with automatic luminous flux reduction in **4 steps**. To increase energy savings at night when there are fewer people and vehicles around, a lighting fixture can be programmed according to a specific profile (customizable on request). The fixture reduces its luminous flux through a self-learning process which, depending on the previous switching on and off times, will determine a hypothetical "virtual midnight". This is the average value between the time the fixture is switched on (sunset) and switched off (sunrise). The "virtual midnight" is the reference point for dimming lights according to the desired profile. The device is integrated in the LED driver and therefore does not require any modification to the system. *In order for the system to function correctly, the system must be adjusted by a device that turns the system on and off on a regular basis every day.* ***ATTENTION:*** *original settings and time slots for the "virtual midnight" value can be customized in up to 5 steps upon request.*
PLC remote control ordered with **sub-code -0078**	Point-to-point and system management and diagnosis system
For more information see page XX-XXIII	

Factory settings

Time	Flux
on ÷ 22:00	100%
22:00 ÷ 23:30	75%
23:30 ÷ 02:30	50%
02:30 ÷ 04:00	75%
04:00 ÷ off	100%

Example with Zhaga Socket (subcode -0054)



LUMINAIRE DESIGNED FOR INSTALLATION ON NEMA OR ZHAGA SOCKET: to monitor and manage public lighting centrally, lighting fixtures will always be more equipped with wireless controls that will allow their integration with the IoT. Today the market offers two solutions: **NEMA and ZHAGA**. Both solutions offer an electrical and mechanical connection between the control antenna and the lighting fixture.

Nema Socket order with **subcode -40** (sealing cap to be ordered separately)	Mounted directly on the fixture's body, ideal for remote lighting management applications.
Zhaga Socket order with **subcode -0054** (complete with sealing cap)	

The Zhaga-D4i mark certifies the fixture's compliance with Zhaga Book 18 version 2 specifications for outdoor luminaires and DiiA's D4i specifications for intra-luminaire DALI interface.



it is possible to order **Denia ES 1-2** with lens having photometric distributions that allow considerable design flexibility.

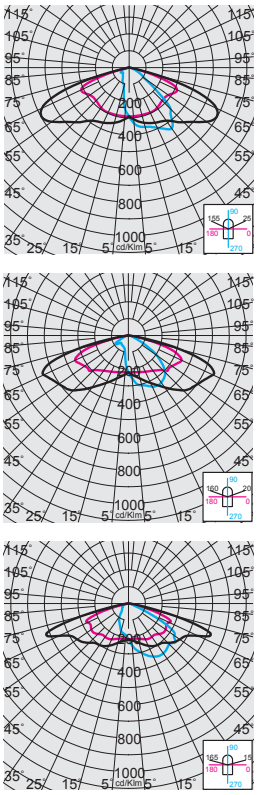

RG0 Ethr

+40 C° -30

U.V.

LOW FLICKER

2700K

3000K

4000K

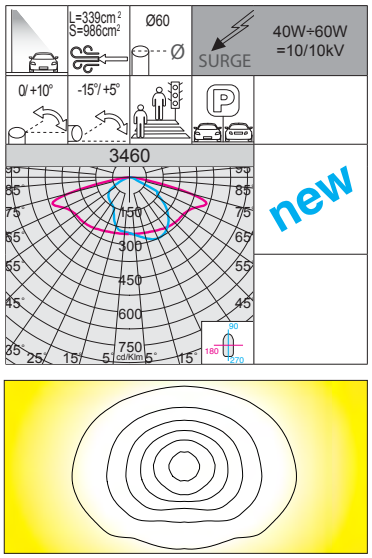

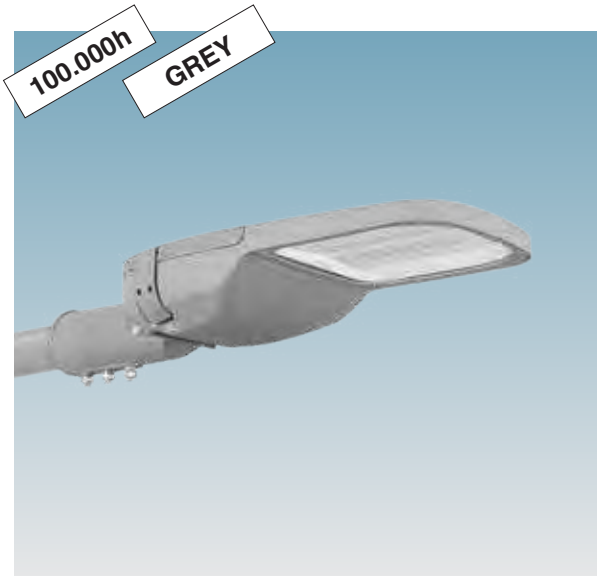

IP66IK09

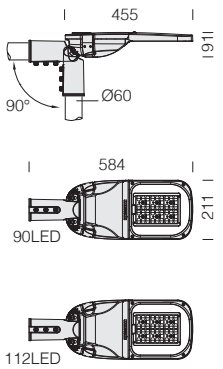

LED: power factor ≥0.9.
Luminous flux maintenance 90%: 100.000h (L90B10).

3460 Denia ES 1

		CLD PROG		CLD MIDNIGHT	CLD ZHAGA		LUMEN OUTPUT (tq= 25 °C)
LED	colour	weight	code	code	code	W tot	K - ølm - CRI
LED	grey	3.80	340000-00	340000-30	340000-0054	**40**	4000K - **6200lm** - CRI>70
			340000-39	340000-3028	340000-3954		3000K - **5890lm** - CRI>70
			340002-00	340002-30	340002-0054		2700K - **5890lm** - CRI>70
LED	grey	3.80	340001-00	340001-30	340001-0054	**60**	4000K - **9930lm** - CRI>70
			340001-39	340001-3028	340001-3954		3000K - **9435lm** - CRI>70
			340003-00	340003-30	340003-0054		2700K - **9435lm** - CRI>70

On request with sub-code **-93**: version with pole connection suited for poles with a diameter 46/76mm.

IP66 IK09

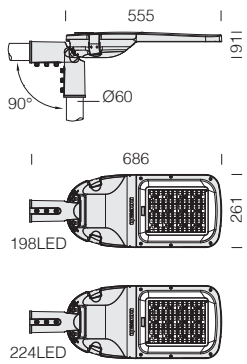

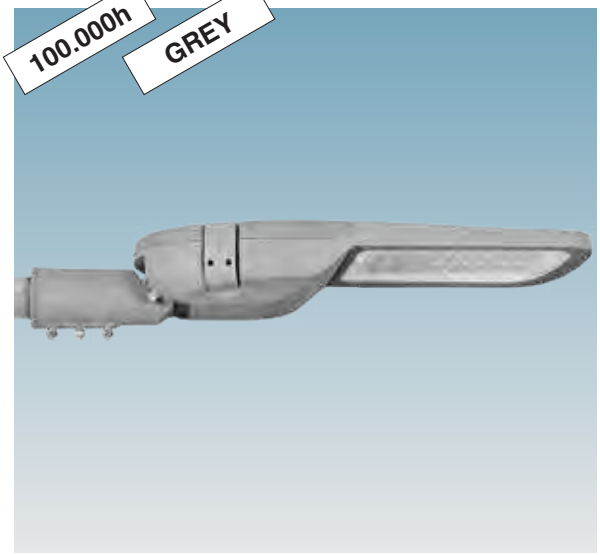

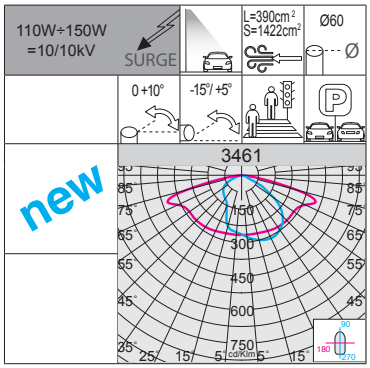

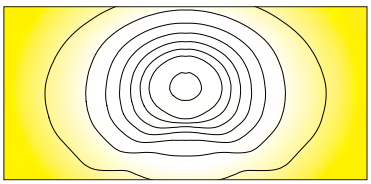

RGO Ethr · +40 C° -30 · U.V. · LOW FLICKER · 2700K · 3000K · 4000K

LED: power factor ≥0.9.
Luminous flux maintenance 90%: 100.000h (L90B10).

3461 Denia ES 2

		CLD PROG	CLD MIDNIGHT	CLD ZHAGA		LUMEN OUTPUT (tq= 25 °C)
LED	colour	weight	code	code	code	W tot	K - ølm - CRI
LED	grey	6.50	340010-00	340010-30	340010-0054	**110**	4000K - **18150lm** - CRI>70
			340010-39	340010-3028	340010-3954		3000K - **17245lm** - CRI>70
			340012-00	340012-30	340012-0054		2700K - **17245lm** - CRI>70
LED	grey	6.50	340011-00	340011-30	340011-0054	**150**	4000K - **23980lm** - CRI>70
			340011-39	340011-3028	340011-3954		3000K - **22781lm** - CRI>70
			340013-00	340013-30	340013-0054		2700K - **22781lm** - CRI>70

On request with sub-code **-93**: version with pole connection suited for poles with a diameter 46/76mm.

IP66 IK09

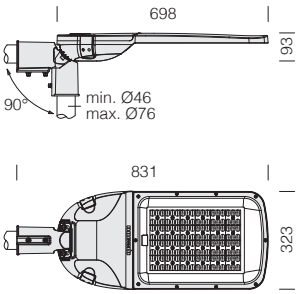



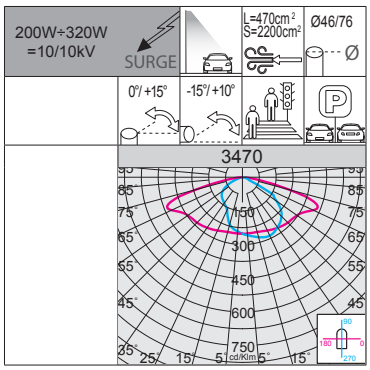

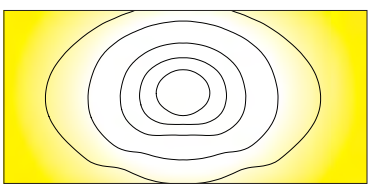

RGO Ethr · +40 C° -30 · U.V. · LOW FLICKER · 3000K · 4000K

LED: power factor ≥0.9.
Luminous flux maintenance 90%: 100.000h (L90B10).

3470 Denia ES 3

		CLD PROG	CLD MIDNIGHT	CLD ZHAGA		LUMEN OUTPUT (tq= 25 °C)
LED	colour	weight	code	code	code	W tot	K - ølm - CRI
LED	grey	7.50	340015-00	340015-30	340015-0054	**200**	4000K - 28130lm - CRI>70
			340015-39	340015-3028	340015-3954		3000K - 26723lm - CRI>70
LED	grey	7.50	340016-00	340016-30	340016-0054	**240**	4000K - 33755lm - CRI>70
			340016-39	340016-3028	340016-3954		3000K - 32067lm - CRI>70
LED	grey	7.50	340017-00	340017-30	340017-0054	**320**	4000K - 45000lm - CRI>70
			340017-39	340017-3028	340017-3954		3000K - 42750lm - CRI>70

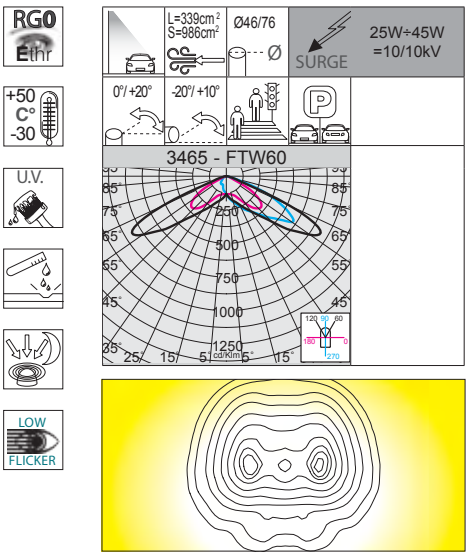

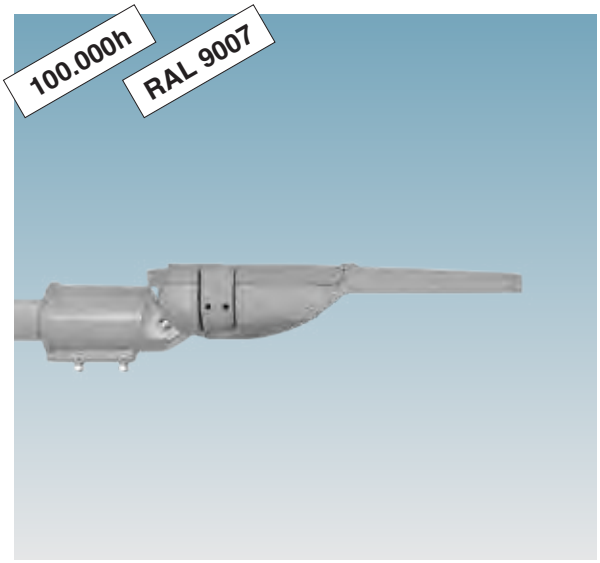

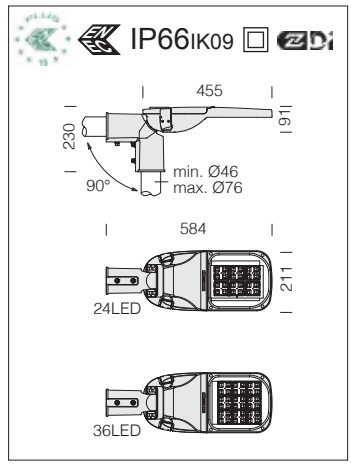

LED: power factor ≥0.9.
Luminous flux maintenance 90%: 100.000h (L90B10).

Other available versions		
code	W tot	K - ølm - CRI
340071-00-0180-FTW	38	4000K - 6290lm - CRI>70
340071-39-0180-FTW		3000K - 5944lm - CRI>70
340071-00-0210-FTW	45	4000K - 7301lm - CRI>70
340071-39-0210-FTW		3000K - 6899lm - CRI>70

Total wattage setup: this can be done by programming the drive current values requested when ordering/purchasing the fixture (up to 60Wupon request).

3465 Denia PRO 1 - FTW60 large areas

		CLD PROG			LUMEN OUTPUT (tq= 25 °C)
LED	colour	weight	code	W tot	K - ølm - CRI
LED	RAL 9007	4.50	340070-00-0175-FTW	25	4000K - 4080lm - CRI>70
			340070-39-0175-FTW		3000K - 3856lm - CRI>70
LED	RAL 9007	4.50	340071-00-0150-FTW	32	4000K - 5267lm - CRI>70
			340071-39-0150-FTW		3000K - 4977lm - CRI>70

		CLD ZHAGA			LUMEN OUTPUT (tq= 25 °C)
LED	colour	weight	code	W tot	K - ølm - CRI
LED	RAL 9007	4.50	340070-0054-0175-FTW	25	4000K - 4080lm - CRI>70
			340070-3954-0175-FTW		3000K - 3856lm - CRI>70
LED	RAL 9007	4.50	340071-0054-0150-FTW	32	4000K - 5267lm - CRI>70
			340071-3954-0150-FTW		3000K - 4977lm - CRI>70

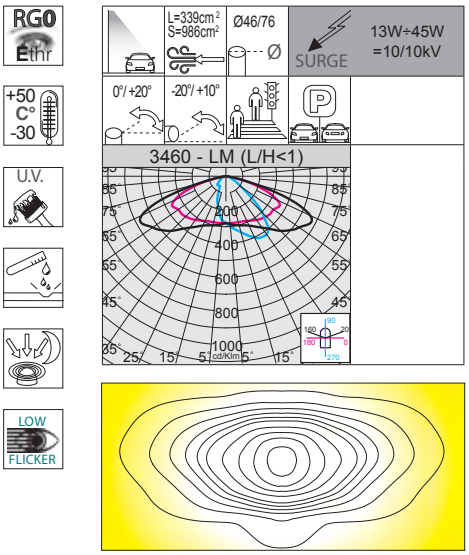

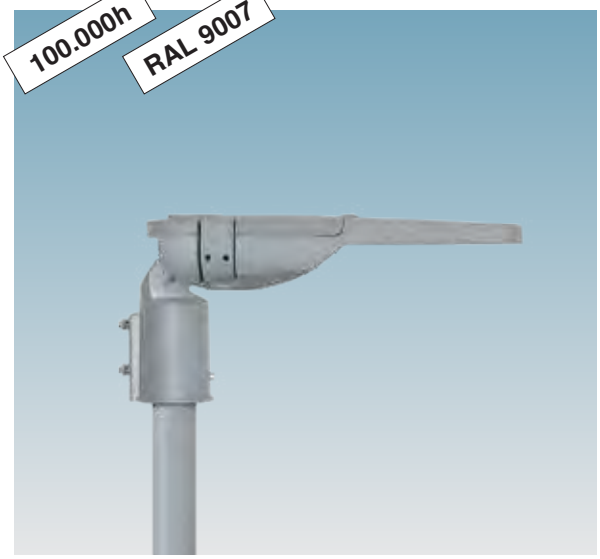

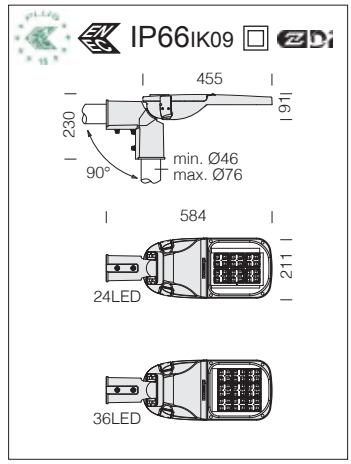

LED: power factor ≥0.9.
Luminous flux maintenance 90%: 100.000h (L90B10).

Other available versions		
code	W tot	K - ølm - CRI
340020-00-0110-LM	16	4000K - 2572lm - CRI>70
340020-39-0110-LM		3000K - 2431lm - CRI>70
340020-00-0130-LM	18	4000K - 3038lm - CRI>70
340020-39-0130-LM		3000K - 2871lm - CRI>70
340020-00-0155-LM	22	4000K - 3600lm - CRI>70
340020-39-0155-LM		3000K - 3402lm - CRI>70
340020-00-0175-LM	25	4000K - 4051lm - CRI>70
340020-39-0175-LM		3000K - 3828lm - CRI>70
340021-00-0150-LM	32	4000K - 5230lm - CRI>70
340021-39-0150-LM		3000K - 4942lm - CRI>70
340021-00-0180-LM	38	4000K - 6246lm - CRI>70
340021-39-0180-LM		3000K - 5902lm - CRI>70
340021-00-0210-LM	45	4000K - 7250lm - CRI>70
340021-39-0210-LM		3000K - 6851lm - CRI>70

Total wattage setup: this can be done by programming the drive current values requested when ordering/purchasing the fixture (up to 60Wupon request).

3460 Denia PRO 1 - LM (L/H<1)

		CLD PROG			LUMEN OUTPUT (tq= 25 °C)
LED	colour	weight	code	W tot	K - ølm - CRI
LED	RAL 9007	4.50	340020-00-0090-LM	13	4000K - 2109lm - CRI>70
			340020-39-0090-LM		3000K - 1993lm - CRI>70
LED	RAL 9007	4.50	340021-00-0135-LM	28	4000K - 4718lm - CRI>70
			340021-39-0135-LM		3000K - 4459lm - CRI>70

		CLD ZHAGA			LUMEN OUTPUT (tq= 25 °C)
LED	colour	weight	code	W tot	K - ølm - CRI
LED	RAL 9007	4.50	340020-0054-0090-LM	13	4000K - 2109lm - CRI>70
			340020-3954-0090-LM		3000K - 1993lm - CRI>70
LED	RAL 9007	4.50	340021-0054-0135-LM	28	4000K - 4718lm - CRI>70
			340021-3954-0135-LM		3000K - 4459lm - CRI>70

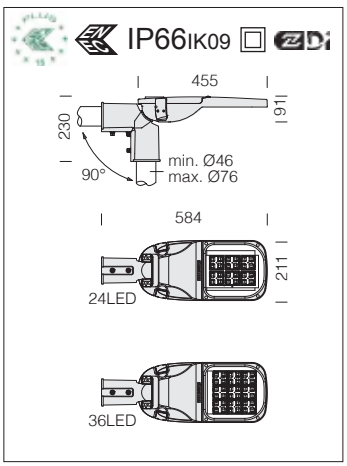

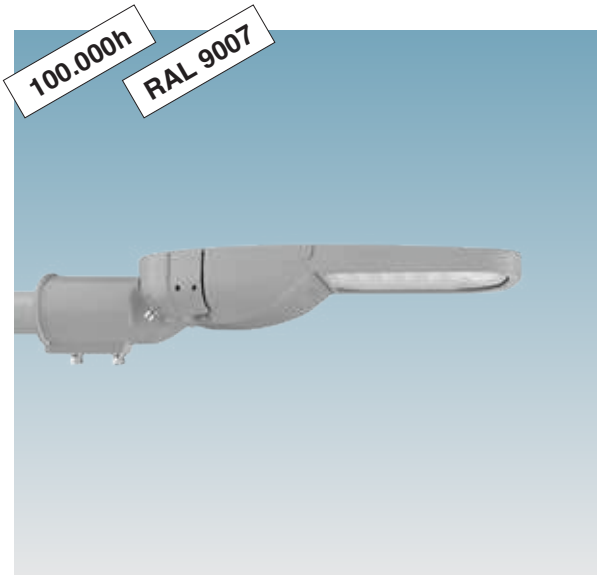

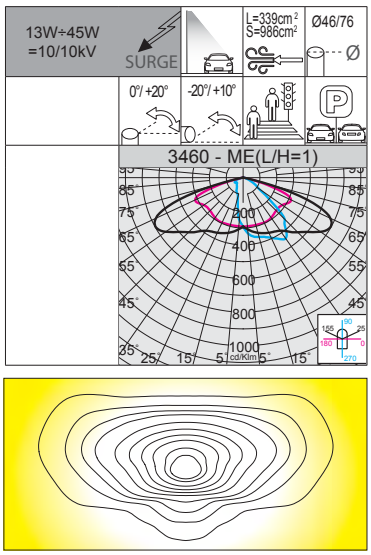



LED: power factor ≥0.9.
Luminous flux maintenance 90%: 100.000h (L90B10).

3460 Denia PRO 1 - ME (L/H=1)

		CLD PROG			LUMEN OUTPUT (tq= 25 °C)
LED	colour	weight	code	W tot	K - ølm - CRI
LED	RAL 9007	4.50	340030-00-0090-ME	13	4000K - 2078lm - CRI>70
			340030-39-0090-ME		3000K - 1964lm - CRI>70
LED	RAL 9007	4.50	340031-00-0135-ME	28	4000K - 4523lm - CRI>70
			340031-39-0135-ME		3000K - 4274lm - CRI>70

		CLD ZHAGA			LUMEN OUTPUT (tq= 25 °C)
LED	colour	weight	code	W tot	K - ølm - CRI
LED	RAL 9007	4.50	340030-0054-0090-ME	13	4000K - 2078lm - CRI>70
			340030-3954-0090-ME		3000K - 1964lm - CRI>70
LED	RAL 9007	4.50	340031-0054-0135-ME	28	4000K - 4523lm - CRI>70
			340031-3954-0135-ME		3000K - 4274lm - CRI>70

Other available versions

code	W tot	K - ølm - CRI
340030-00-0110-ME	16	4000K - 2534lm - CRI>70
340030-39-0110-ME		3000K - 2395lm - CRI>70
340030-00-0130-ME	18	4000K - 3015lm - CRI>70
340030-39-0130-ME		3000K - 2849lm - CRI>70
340030-00-0155-ME	22	4000K - 3547lm - CRI>70
340030-39-0155-ME		3000K - 3352lm - CRI>70
340030-00-0175-ME	25	4000K - 4030lm - CRI>70
340030-39-0175-ME		3000K - 3808lm - CRI>70
340031-00-0150-ME	32	4000K - 5034lm - CRI>70
340031-39-0150-ME		3000K - 4757lm - CRI>70
340031-00-0180-ME	38	4000K - 6046lm - CRI>70
340031-39-0180-ME		3000K - 5713lm - CRI>70
340031-00-0210-ME	45	4000K - 7142lm - CRI>70
340031-39-0210-ME		3000K - 6749lm - CRI>70

Total wattage setup: this can be done by programming the drive current values requested when ordering/purchasing the fixture (up to 60Wupon request).

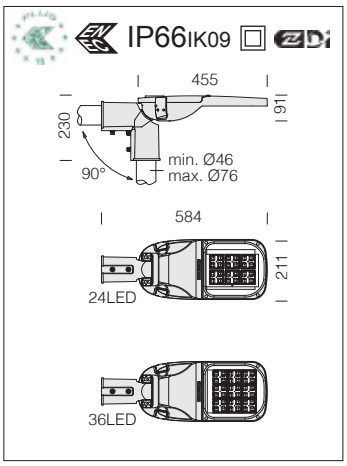

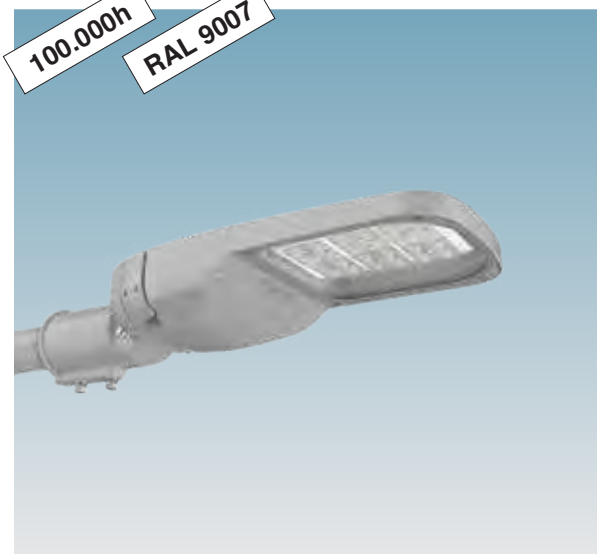

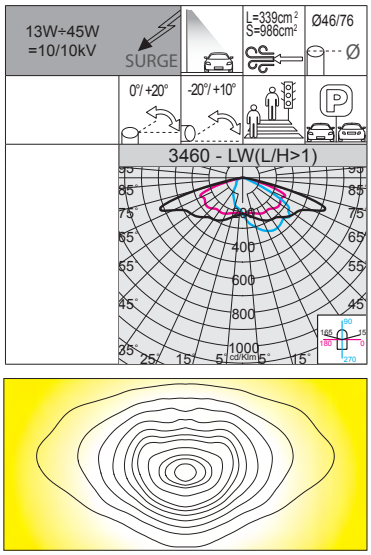



LED: power factor ≥0.9.
Luminous flux maintenance 90%: 100.000h (L90B10).

3460 Denia PRO 1 - LW (L/H>1)

		CLD PROG			LUMEN OUTPUT (tq= 25 °C)
LED	colour	weight	code	W tot	K - ølm - CRI
LED	RAL 9007	4.50	340040-00-0090-LW	13	4000K - 2059lm - CRI>70
			340040-39-0090-LW		3000K - 1946lm - CRI>70
LED	RAL 9007	4.50	340041-00-0135-LW	28	4000K - 4606lm - CRI>70
			340041-39-0135-LW		3000K - 4553lm - CRI>70

		CLD ZHAGA			LUMEN OUTPUT (tq= 25 °C)
LED	colour	weight	code	W tot	K - ølm - CRI
LED	RAL 9007	4.50	340040-0054-0090-LW	13	4000K - 2059lm - CRI>70
			340040-3954-0090-LW		3000K - 1946lm - CRI>70
LED	RAL 9007	4.50	340041-0054-0135-LW	28	4000K - 4606lm - CRI>70
			340041-3954-0135-LW		3000K - 4553lm - CRI>70

Other available versions

code	W tot	K - ølm - CRI
340040-00-0110-LW	16	4000K - 2511lm - CRI>70
340040-39-0110-LW		3000K - 2373lm - CRI>70
340040-00-0130-LW	18	4000K - 2988lm - CRI>70
340040-39-0130-LW		3000K - 2824lm - CRI>70
340040-00-0155-LW	22	4000K - 3515lm - CRI>70
340040-39-0155-LW		3000K - 3322lm - CRI>70
340040-00-0175-LW	25	4000K - 3995lm - CRI>70
340040-39-0175-LW		3000K - 3775lm - CRI>70
340041-00-0150-LW	32	4000K - 5106lm - CRI>70
340041-39-0150-LW		3000K - 4825lm - CRI>70
340041-00-0180-LW	38	4000K - 6098lm - CRI>70
340041-39-0180-LW		3000K - 5763lm - CRI>70
340041-00-0210-LW	45	4000K - 7078lm - CRI>70
340041-39-0210-LW		3000K - 6689lm - CRI>70

Total wattage setup: this can be done by programming the drive current values requested when ordering/purchasing the fixture (up to 60Wupon request).













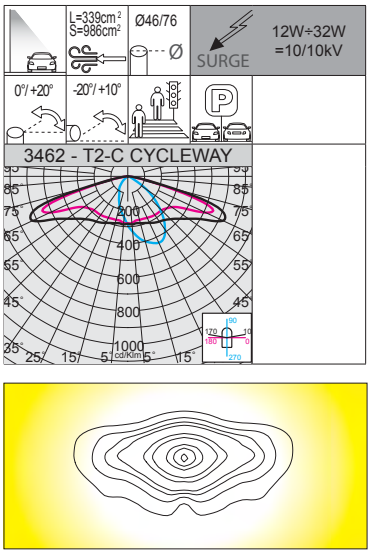

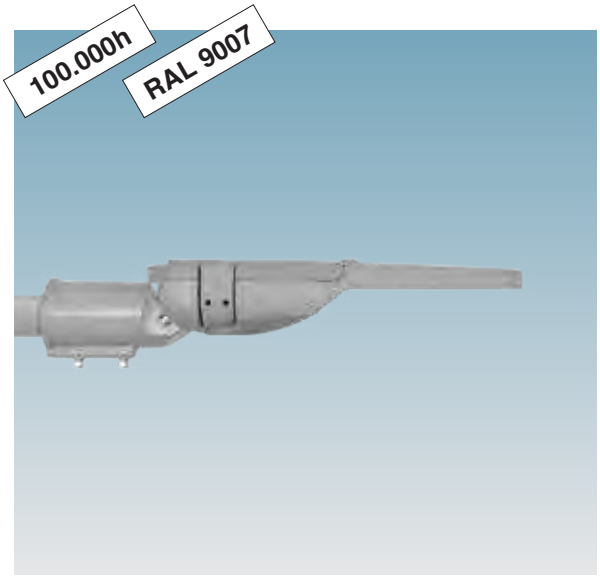

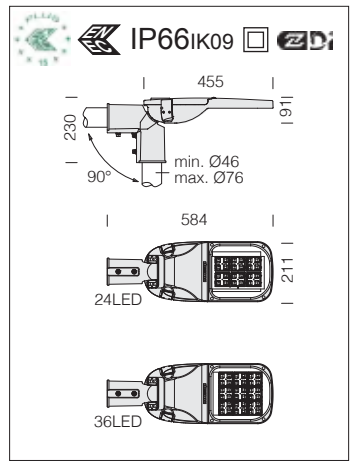

LED: power factor ≥0.9.
Luminous flux maintenance 90%: 100.000h (L90B10).

Other available versions		
code	W tot	K - ølm - CRI
340050-00-0090-T2C	13	4000K - 2039lm - CRI>70
340050-39-0090-T2C		3000K - 1927lm - CRI>70
340050-00-0110-T2C	16	4000K - 2486lm - CRI>70
340050-39-0110-T2C		3000K - 2349lm - CRI>70
340050-00-0130-T2C	18	4000K - 2930lm - CRI>70
340050-39-0130-T2C		3000K - 2769lm - CRI>70
340050-00-0155-T2C	22	4000K - 3481lm - CRI>70
340050-39-0155-T2C		3000K - 3290lm - CRI>70
340050-00-0175-T2C	25	4000K - 3917lm - CRI>70
340050-39-0175-T2C		3000K - 3702lm - CRI>70
340051-00-0150-T2C	32	4000K - 5057lm - CRI>70
340051-39-0150-T2C		3000K - 4749lm - CRI>70

Total wattage setup: this can be done by programming the drive current values requested when ordering/purchasing the fixture (up to 60Wupon request).

3462 Denia PRO 1 - T2-C CYCLEWAY					
		CLD PROG			LUMEN OUTPUT (tq= 25 °C)
LED	colour	weight	code	W tot	K - ølm - CRI
LED	RAL 9007	4.50	340050-00-0080-T2C	12	4000K - 1887lm - CRI>70
			340050-39-0080-T2C		3000K - 1783lm - CRI>70
LED	RAL 9007	4.50	340051-00-0135-T2C	28	4000K - 4561lm - CRI>70
			340051-39-0135-T2C		3000K - 4310lm - CRI>70

		CLD ZHAGA			LUMEN OUTPUT (tq= 25 °C)
LED	colour	weight	code	W tot	K - ølm - CRI
LED	RAL 9007	4.50	340050-0054-0080-T2C	12	4000K - 1887lm - CRI>70
			340050-3954-0080-T2C		3000K - 1783lm - CRI>70
LED	RAL 9007	4.50	340051-0054-0135-T2C	28	4000K - 4561lm - CRI>70
			340051-3954-0135-T2C		3000K - 4310lm - CRI>70













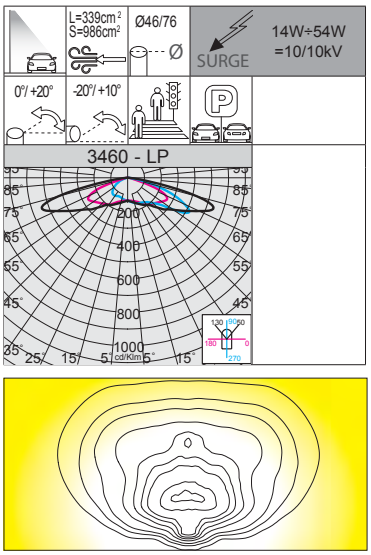



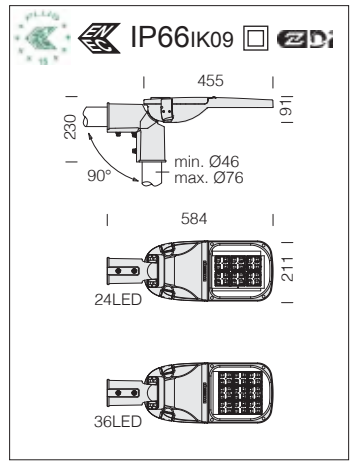

LED: power factor ≥0.9.
Luminous flux maintenance 90%: 100.000h (L90B10).

Other available versions		
code	W tot	K - ølm - CRI
340060-00-0125-LP	18	4000K - 2589lm - CRI>70
340060-39-0125-LP		3000K - 2447lm - CRI>70
340060-00-0155-LP	22	4000K - 3145lm - CRI>70
340060-39-0155-LP		3000K - 2972lm - CRI>70
340060-00-0175-LP	25	4000K - 3596lm - CRI>70
340060-39-0175-LP		3000K - 3398lm - CRI>70
340060-00-0205-LP	30	4000K - 4191lm - CRI>70
340060-39-0205-LP		3000K - 3960lm - CRI>70
340061-00-0170-LP	36	4000K - 5244lm - CRI>70
340061-39-0170-LP		3000K - 4982lm - CRI>70
340061-00-0200-LP	42	4000K - 6139lm - CRI>70
340061-39-0200-LP		3000K - 5832lm - CRI>70
340061-00-0235-LP	50	4000K - 7170lm - CRI>70
340061-39-0235-LP		3000K - 6812lm - CRI>70
340061-00-0253-LP	54	4000K - 8152lm - CRI>70
340061-39-0253-LP		3000K - 7778lm - CRI>70

Total wattage setup: this can be done by programming the drive current values requested when ordering/purchasing the fixture (up to 60Wupon request).

3460 Denia PRO 1 - LP					
		CLD PROG			LUMEN OUTPUT (tq= 25 °C)
LED	colour	weight	code	W tot	K - ølm - CRI
LED	RAL 9007	4.50	340060-00-0100-LP	14	4000K - 2078lm - CRI>70
			340060-39-0100-LP		3000K - 1964lm - CRI>70
LED	RAL 9007	4.50	340061-00-0150-LP	32	4000K - 4642lm - CRI>70
			340061-39-0150-LP		3000K - 4410lm - CRI>70

		CLD ZHAGA			LUMEN OUTPUT (tq= 25 °C)
LED	colour	weight	code	W tot	K - ølm - CRI
LED	RAL 9007	4.50	340060-0054-0100-LP	14	4000K - 2078lm - CRI>70
			340060-3954-0100-LP		3000K - 1964lm - CRI>70
LED	RAL 9007	4.50	340061-0054-0150-LP	32	4000K - 4642lm - CRI>70
			340061-3954-0150-LP		3000K - 4410lm - CRI>70

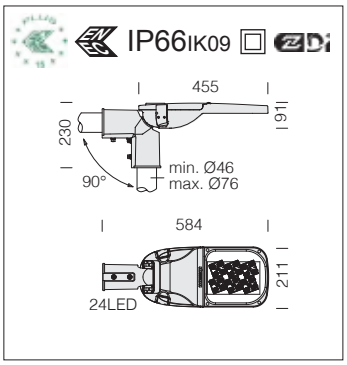

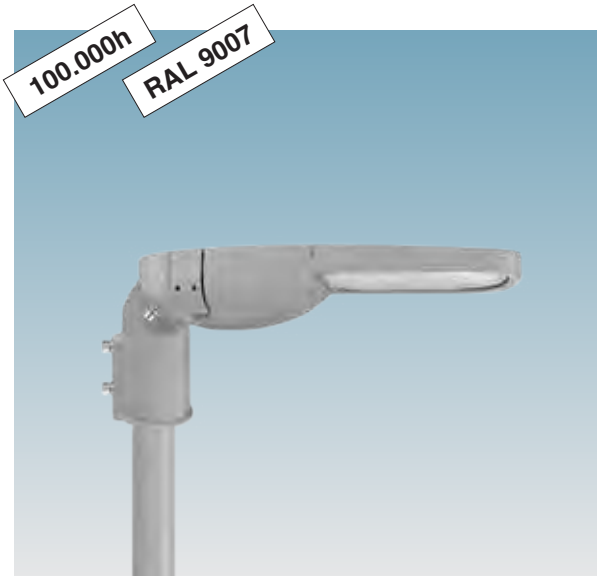

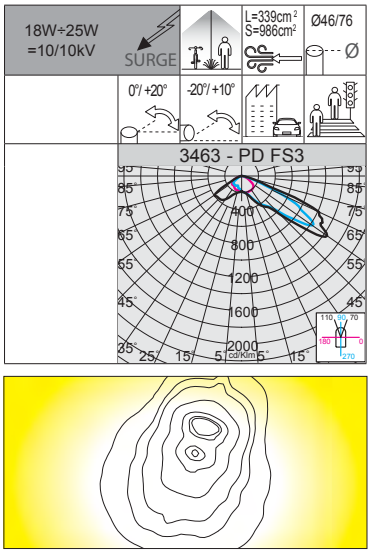

RGO Ethr

+50 C° -30

U.V.

LOW FLICKER

LED: power factor ≥0.9.
Luminous flux maintenance 90%: 100.000h (L90B10).

3463 Denia PRO 1 - PD FS3

		CLD PROG			LUMEN OUTPUT (tq= 25 °C)
LED	colour	weight	code	W tot	K - ølm - CRI
LED	RAL 9007	4.50	340080-00-0130-PD	18	4000K - 3013lm - CRI>70
			340080-39-0130-PD		3000K - 2847lm - CRI>70

		CLD ZHAGA			LUMEN OUTPUT (tq= 25 °C)
LED	colour	weight	code	W tot	K - ølm - CRI
LED	RAL 9007	4.50	340080-0054-0130-PD	18	4000K - 3013lm - CRI>70
			340080-3954-0130-PD		3000K - 2847lm - CRI>70

Other available versions		
code	W tot	K - ølm - CRI
340080-00-0175-PD	25	4000K - 4027lm - CRI>70
340080-39-0175-PD		3000K - 3806lm - CRI>70

Total wattage setup: this can be done by programming the drive current values requested when ordering/purchasing the fixture (up to 60Wupon request).

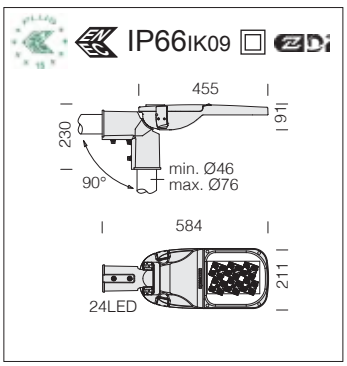



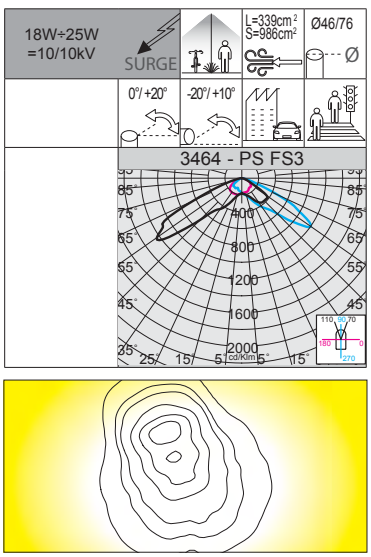

RGO Ethr

+50 C° -30

U.V.

LOW FLICKER

LED: power factor ≥0.9.
Luminous flux maintenance 90%: 100.000h (L90B10).

3464 Denia PRO 1 - PS FS3

		CLD PROG			LUMEN OUTPUT (tq= 25 °C)
LED	colour	weight	code	W tot	K - ølm - CRI
LED	RAL 9007	4.50	340081-00-0130-PS	18	4000K - 3000lm - CRI>70
			340081-39-0130-PS		3000K - 2835lm - CRI>70

		CLD ZHAGA			LUMEN OUTPUT (tq= 25 °C)
LED	colour	weight	code	W tot	K - ølm - CRI
LED	RAL 9007	4.50	340081-0054-0130-PS	18	4000K - 3000lm - CRI>70
			340081-3954-0130-PS		3000K - 2835lm - CRI>70

Other available versions		
code	W tot	K - ølm - CRI
340081-00-0175-PS	25	4000K - 4003lm - CRI>70
340081-39-0175-PS		3000K - 3783lm - CRI>70

Total wattage setup: this can be done by programming the drive current values requested when ordering/purchasing the fixture (up to 60Wupon request).





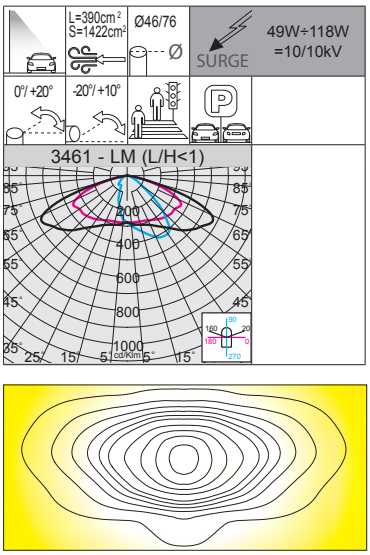



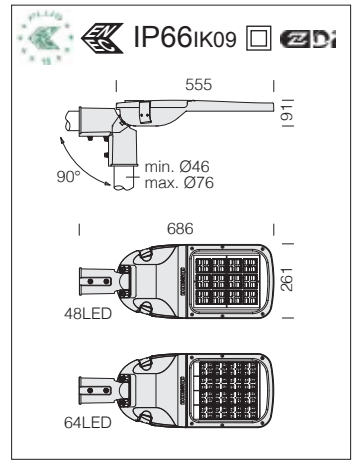

LED: power factor ≥0.9.
Luminous flux maintenance 90%: 100.000h (L90B10).

Other available versions		
code	W tot	K - ølm - CRI
340025-00-0200-LM	56	4000K - 9222lm - CRI>70
340025-39-0200-LM		3000K - 8715lm - CRI>70
340025-00-0230-LM	65	4000K - 10550lm - CRI>70
340025-39-0230-LM		3000K - 9970lm - CRI>70
340025-00-0250-LM	71	4000K - 11428lm - CRI>70
340025-39-0250-LM		3000K - 10799lm - CRI>70
340026-00-0235-LM	88	4000K - 14360lm - CRI>70
340026-39-0235-LM		3000K - 13570lm - CRI>70
340026-00-0270-LM	103	4000K - 16398lm - CRI>70
340026-39-0270-LM		3000K - 15496lm - CRI>70
340026-00-0310-LM	118	4000K - 18694lm - CRI>70
340026-39-0310-LM		3000K - 17666lm - CRI>70

Total wattage setup: this can be done by programming the drive current values requested when ordering/purchasing the fixture (up to 204Wupon request).

3461 Denia PRO 2 - LM (L/H<1)					
		CLD PROG			LUMEN OUTPUT (tq= 25 °C)
LED	colour	weight	code	W tot	K - ølm - CRI
LED	RAL 9007	6.50	340025-00-0175-LM	49	4000K - 8103lm - CRI>70
			340025-39-0175-LM		3000K - 7657lm - CRI>70
LED	RAL 9007	6.50	340026-00-0200-LM	75	4000K - 12296lm - CRI>70
			340026-39-0200-LM		3000K - 11620lm - CRI>70

		CLD ZHAGA			LUMEN OUTPUT (tq= 25 °C)
LED	colour	weight	code	W tot	K - ølm - CRI
LED	RAL 9007	6.50	340025-0054-0175-LM	49	4000K - 8103lm - CRI>70
			340025-3954-0175-LM		3000K - 7657lm - CRI>70
LED	RAL 9007	6.50	340026-0054-0200-LM	75	4000K - 12296lm - CRI>70
			340026-3954-0200-LM		3000K - 11620lm - CRI>70

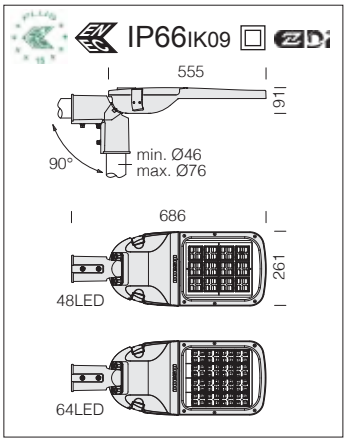

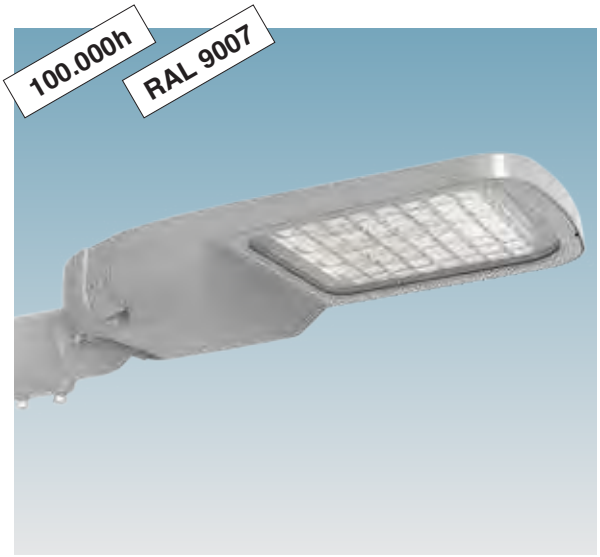

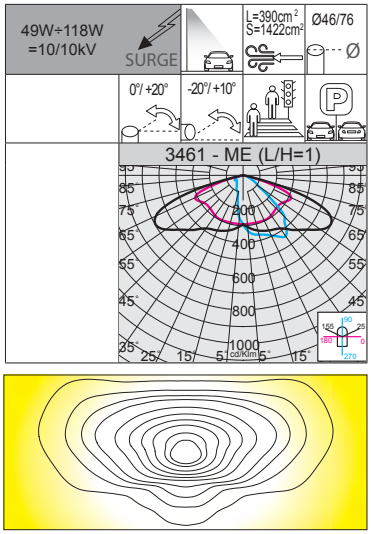

RG0 Ethr

+50 C° -30

U.V.

LOW FLICKER

LED: power factor ≥0.9.
Luminous flux maintenance 90%: 100.000h (L90B10).

3461 Denia PRO 2 - ME (L/H=1)

		CLD PROG			LUMEN OUTPUT (tq= 25 °C)
LED	colour	weight	code	W tot	K - ølm - CRI
LED	RAL 9007	6.50	340035-00-0175-ME	**49**	4000K - 8062lm - CRI>70
			340035-39-0175-ME		3000K - 7619lm - CRI>70
LED	RAL 9007	6.50	340036-00-0200-ME	**75**	4000K - 12144lm - CRI>70
			340036-39-0200-ME		3000K - 11476lm - CRI>70

		CLD ZHAGA			LUMEN OUTPUT (tq= 25 °C)
LED	colour	weight	code	W tot	K - ølm - CRI
LED	RAL 9007	6.50	340035-0054-0175-ME	**49**	4000K - 8062lm - CRI>70
			340035-3954-0175-ME		3000K - 7619lm - CRI>70
LED	RAL 9007	6.50	340036-0054-0200-ME	**75**	4000K - 12144lm - CRI>70
			340036-3954-0200-ME		3000K - 11476lm - CRI>70

Other available versions

code	W tot	K - ølm - CRI
340035-00-0200-ME	**56**	4000K - 9085lm - CRI>70
340035-39-0200-ME		3000K - 8585lm - CRI>70
340035-00-0230-ME	**65**	4000K - 10394lm - CRI>70
340035-39-0230-ME		3000K - 9822lm - CRI>70
340035-00-0250-ME	**71**	4000K - 11259lm - CRI>70
340035-39-0250-ME		3000K - 10640lm - CRI>70
340036-00-0235-ME	**88**	4000K - 14148lm - CRI>70
340036-39-0235-ME		3000K - 13370lm - CRI>70
340036-00-0270-ME	**103**	4000K - 16155lm - CRI>70
340036-39-0270-ME		3000K - 15266lm - CRI>70
340036-00-0310-ME	**118**	4000K - 18418lm - CRI>70
340036-39-0310-ME		3000K - 17405lm - CRI>70

Total wattage setup: this can be done by programming the drive current values requested when ordering/purchasing the fixture (up to 204Wupon request).

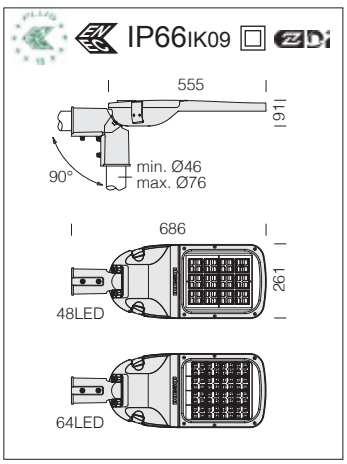

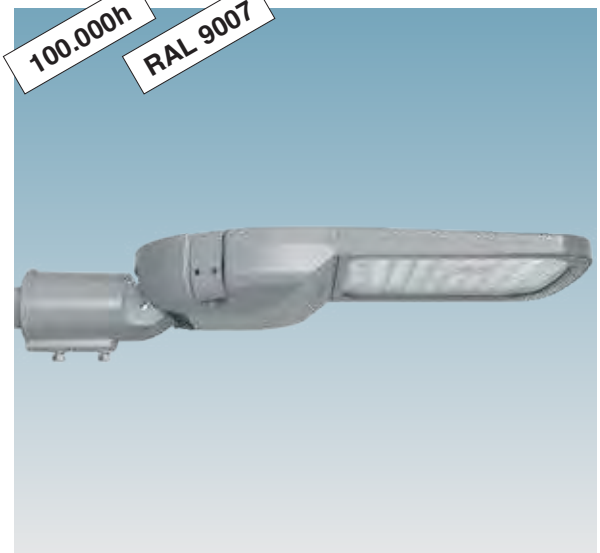

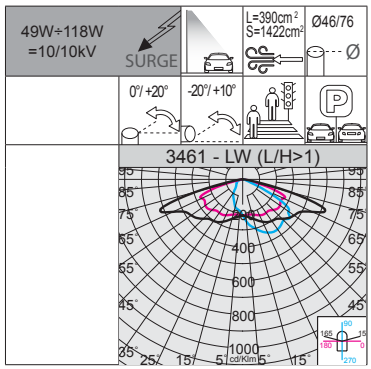

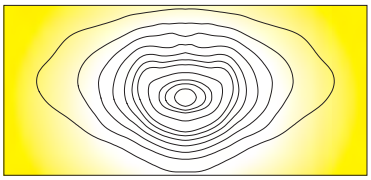

RG0 Ethr

+50 C° -30

U.V.

LOW FLICKER

LED: power factor ≥0.9.
Luminous flux maintenance 90%: 100.000h (L90B10).

3461 Denia PRO 2 - LW (L/H>1)

		CLD PROG			LULWN OUTPUT (tq= 25 °C)
LED	colour	weight	code	W tot	K - ølm - CRI
LED	RAL 9007	6.50	340045-00-0175-LW	**49**	4000K - 7990lm - CRI>70
			340045-39-0175-LW		3000K - 7551lm - CRI>70
LED	RAL 9007	6.50	340046-00-0200-LW	**75**	4000K - 12004lm - CRI>70
			340046-39-0200-LW		3000K - 11344lm - CRI>70

		CLD ZHAGA			LULWN OUTPUT (tq= 25 °C)
LED	colour	weight	code	W tot	K - ølm - CRI
LED	RAL 9007	6.50	340045-0054-0175-LW	**49**	4000K - 7990lm - CRI>70
			340045-3954-0175-LW		3000K - 7551lm - CRI>70
LED	RAL 9007	6.50	340046-0054-0200-LW	**75**	4000K - 12004lm - CRI>70
			340046-3954-0200-LW		3000K - 11344lm - CRI>70

Other available versions

code	W tot	K - ølm - CRI
340045-00-0200-LW	**56**	4000K - 9003lm - CRI>70
340045-39-0200-LW		3000K - 8508lm - CRI>70
340045-00-0230-LW	**65**	4000K - 10301lm - CRI>70
340045-39-0230-LW		3000K - 9734lm - CRI>70
340045-00-0250-LW	**71**	4000K - 11157lm - CRI>70
340045-39-0250-LW		3000K - 10543lm - CRI>70
340046-00-0235-LW	**88**	4000K - 14020lm - CRI>70
340046-39-0235-LW		3000K - 13249lm - CRI>70
340046-00-0270-LW	**103**	4000K - 16080lm - CRI>70
340046-39-0270-LW		3000K - 15196lm - CRI>70
340046-00-0310-LW	**118**	4000K - 18252lm - CRI>70
340046-39-0310-LW		3000K - 17248lm - CRI>70

Total wattage setup: this can be done by programming the drive current values requested when ordering/purchasing the fixture (up to 204Wupon request).











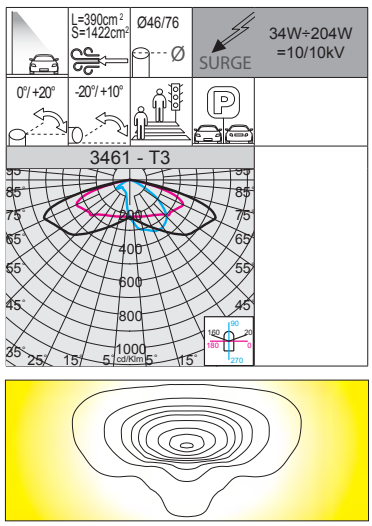

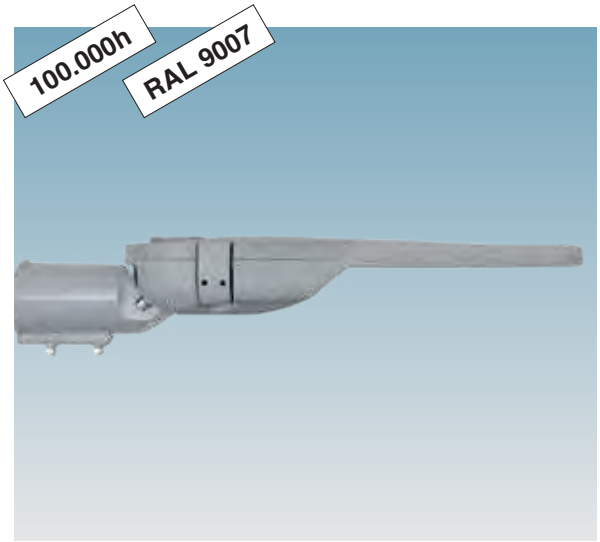

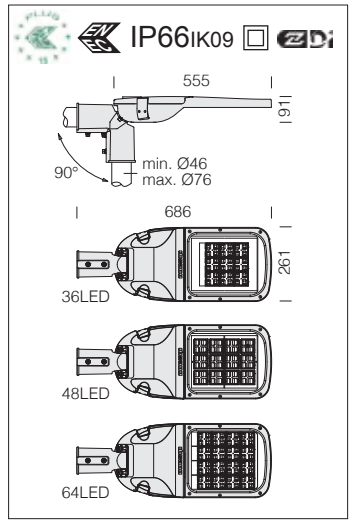

Other available versions		
code	W tot	K - ølm - CRI
340028-00-0260-T3	83	4000K - 13081lm - CRI>70
340028-39-0260-T3		3000K - 12361lm - CRI>70
340029-00-0525-T3	204	4000K - 31220lm - CRI>70
340029-39-0525-T3		3000K - 29503lm - CRI>70

Total wattage setup: this can be done by programming the drive current values requested when ordering/purchasing the fixture (up to 204Wupon request).

3461 Denia PRO 2 - T3

		CLD PROG			LUMEN OUTPUT (tq= 25 °C)
LED	colour	weight	code	W tot	K - ølm - CRI
LED	RAL 9007	6.50	340027-00-0155-T3	**34**	4000K - 5318lm - CRI>70
			340027-39-0155-T3		3000K - 5025lm - CRI>70
LED	RAL 9007	6.50	340028-00-0190-T3	**57**	4000K - 9122lm - CRI>70
			340028-39-0190-T3		3000K - 8620lm - CRI>70
LED	RAL 9007	6.50	340029-00-0275-T3	**110**	4000K - 17181lm - CRI>70
			340029-39-0275-T3		3000K - 16236lm - CRI>70

		CLD PROG			LUMEN OUTPUT (tq= 25 °C)
LED	RAL 9007	6.50	340027-0054-0155-T3	**34**	4000K - 5318lm - CRI>70
			340027-3954-0155-T3		3000K - 5025lm - CRI>70
LED	RAL 9007	6.50	340028-0054-0190-T3	**57**	4000K - 9122lm - CRI>70
			340028-3954-0190-T3		3000K - 8620lm - CRI>70
LED	RAL 9007	6.50	340029-0054-0275-T3	**110**	4000K - 17181lm - CRI>70
			340029-3954-0275-T3		3000K - 16236lm - CRI>70













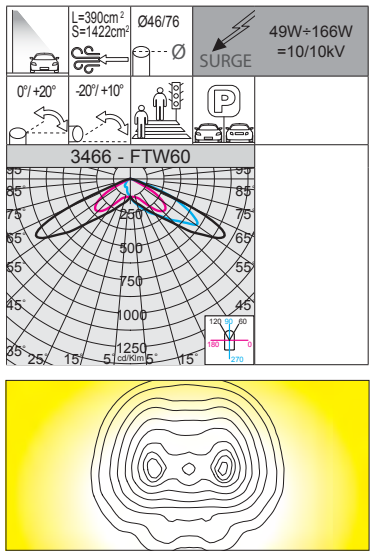

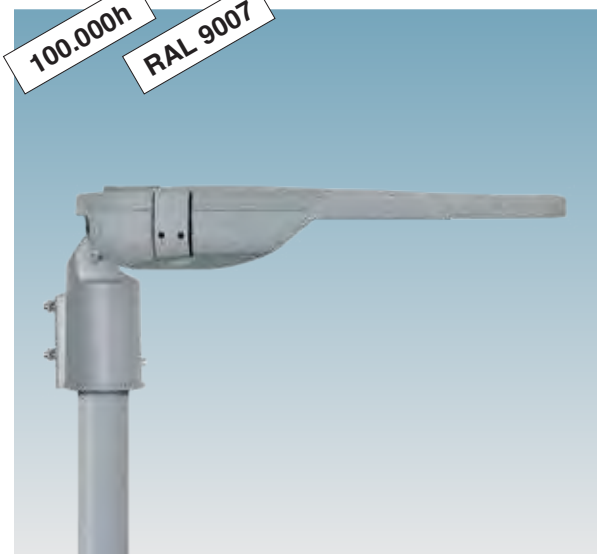

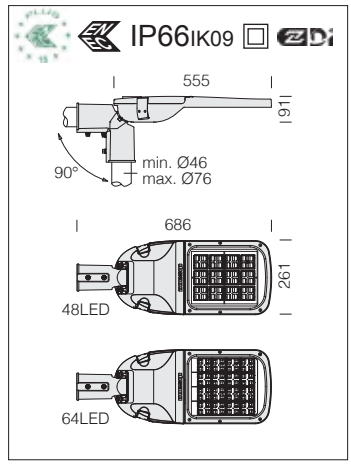

LED: power factor ≥0.9.
Luminous flux maintenance 90%: 100.000h (L90B10).

Other available versions		
code	W tot	K - ølm - CRI
340075-00-0200-FTW	56	4000K - 9216lm - CRI>70
340075-39-0200-FTW		3000K - 8709lm - CRI>70
340075-00-0230-FTW	65	4000K - 10544lm - CRI>70
340075-39-0230-FTW		3000K - 9964lm - CRI>70
340075-00-0250-FTW	71	4000K - 11421lm - CRI>70
340075-39-0250-FTW		3000K - 10793lm - CRI>70
340076-00-0235-FTW	88	4000K - 14352lm - CRI>70
340076-39-0235-FTW		3000K - 13563lm - CRI>70
340076-00-0270-FTW	103	4000K - 16388lm - CRI>70
340076-39-0270-FTW		3000K - 15487lm - CRI>70
340076-00-0310-FTW	118	4000K - 18653lm - CRI>70
340076-39-0310-FTW		3000K - 17627lm - CRI>70
340076-00-0345-FTW	133	4000K - 20663lm - CRI>70
340076-39-0345-FTW		3000K - 19527lm - CRI>70
340076-00-0370-FTW	142	4000K - 22065lm - CRI>70
340076-39-0370-FTW		3000K - 20851m - CRI>70
340076-00-0420-FTW	166	4000K - 24821lm - CRI>70
340076-39-0420-FTW		3000K - 23456lm - CRI>70

Total wattage setup: this can be done by programming the drive current values requested when ordering/purchasing the fixture (up to 204Wupon request).

3466 Denia PRO 2 - FTW60 large areas

		CLD PROG			LUMEN OUTPUT (tq= 25 °C)
LED	colour	weight	code	W tot	K - ølm - CRI
LED	RAL 9007	6.50	340075-00-0175-FTW	**49**	4000K - 8160lm - CRI>70
			340075-39-0175-FTW		3000K - 7711lm - CRI>70
LED	RAL 9007	6.50	340076-00-0200-FTW	**75**	4000K - 12288lm - CRI>70
			340076-39-0200-FTW		3000K - 11612lm - CRI>70

		CLD ZHAGA			LUMEN OUTPUT (tq= 25 °C)
LED	colour	weight	code	W tot	K - ølm - CRI
LED	RAL 9007	6.50	340075-0054-0175-FTW	**49**	4000K - 8160lm - CRI>70
			340075-3954-0175-FTW		3000K - 7711lm - CRI>70
LED	RAL 9007	6.50	340076-0054-0200-FTW	**75**	4000K - 12288lm - CRI>70
			340076-3954-0200-FTW		3000K - 11612lm - CRI>70

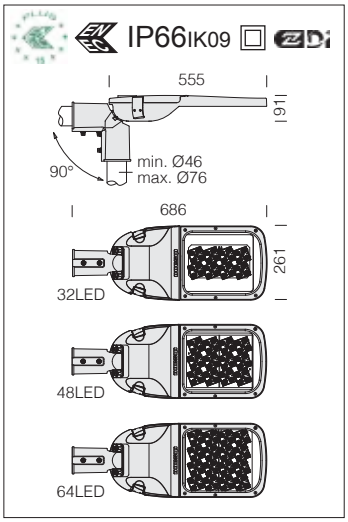



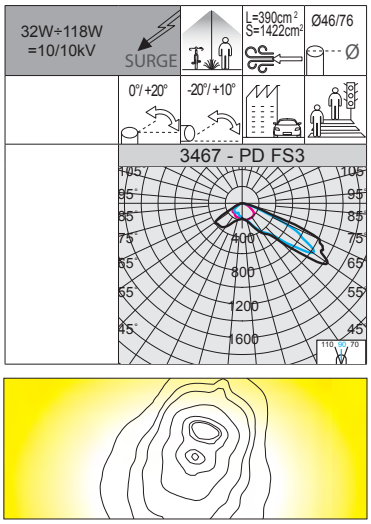

RGO Ethr

+50 C° -30

U.V.

LOW FLICKER

3467 Denia PRO 2 - PD FS3

		CLD PROG			LUMEN OUTPUT (tq= 25 °C)
LED	colour	weight	code	W tot	K - ølm - CRI
LED	RAL 9007	6.50	340085-00-0170-PD	**32**	4000K - 5221lm - CRI>70
			340085-39-0170-PD		3000K - 4934lm - CRI>70
LED	RAL 9007	6.50	340086-00-0175-PD	**49**	4000K - 8055lm - CRI>70
			340086-39-0175-PD		3000K - 7612lm - CRI>70
LED	RAL 9007	6.50	340087-00-0200-PD	**75**	4000K - 12223lm - CRI>70
			340087-39-0200-PD		3000K - 11551lm - CRI>70

		CLD ZHAGA			LUMEN OUTPUT (tq= 25 °C)
LED	RAL 9007	6.50	340085-0054-0170-PD	**32**	4000K - 5221lm - CRI>70
			340085-3954-0170-PD		3000K - 4934lm - CRI>70
LED	RAL 9007	6.50	340086-0054-0175-PD	**49**	4000K - 8055lm - CRI>70
			340086-3954-0175-PD		3000K - 7612lm - CRI>70
LED	RAL 9007	6.50	340087-0054-0200-PD	**75**	4000K - 12223lm - CRI>70
			340087-3954-0200-PD		3000K - 11551lm - CRI>70

Other available versions

code	W tot	K - ølm - CRI
340085-00-0200-PD	**38**	4000K - 6111lm - CRI>70
340085-39-0200-PD		3000K - 5775lm - CRI>70
340085-00-0235-PD	**45**	4000K - 7138lm - CRI>70
340085-39-0235-PD		3000K - 6745lm - CRI>70
340086-00-0230-PD	**65**	4000K - 10488lm - CRI>70
340086-39-0230-PD		3000K - 9911lm - CRI>70
340087-00-0235-PD	**88**	4000K - 14275lm - CRI>70
340087-39-0235-PD		3000K - 13490lm - CRI>70
340087-00-0270-PD	**103**	4000K - 16301lm - CRI>70
340087-39-0270-PD		3000K - 15404lm - CRI>70
340087-00-0310-PD	**118**	4000K - 18584lm - CRI>70
340087-39-0310-PD		3000K - 17562lm - CRI>70

Total wattage setup: this can be done by programming the drive current values requested when ordering/purchasing the fixture (up to 204Wupon request).

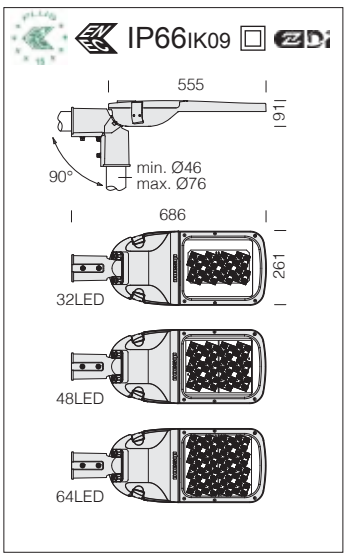

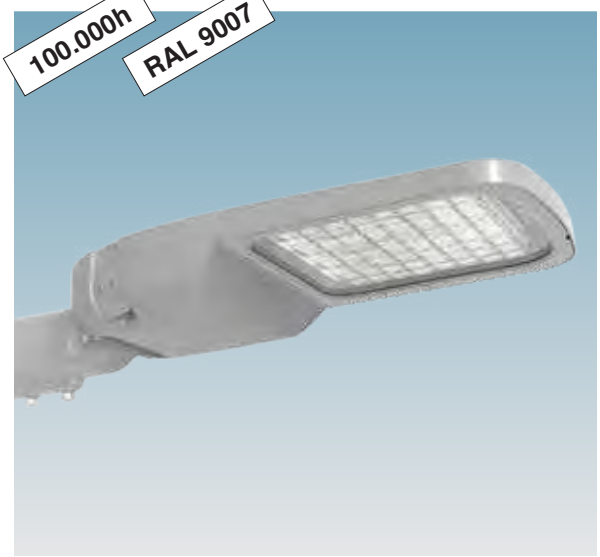

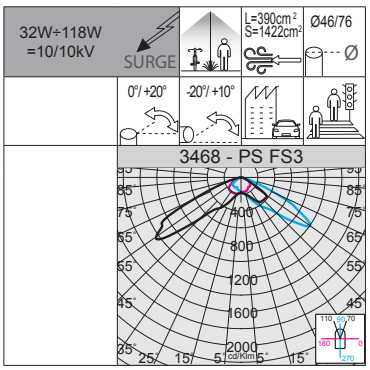

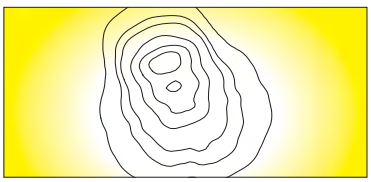

RGO Ethr

+50 C° -30

U.V.

LOW FLICKER

3468 Denia PRO 2 - PS FS3

		CLD PROG			LUMEN OUTPUT (tq= 25 °C)
LED	colour	weight	code	W tot	K - ølm - CRI
LED	RAL 9007	6.50	340088-00-0170-PS	**32**	4000K - 5190lm - CRI>70
			340088-39-0170-PS		3000K - 4905lm - CRI>70
LED	RAL 9007	6.50	340089-00-0175-PS	**49**	4000K - 8007lm - CRI>70
			340089-39-0175-PS		3000K - 7567lm - CRI>70
LED	RAL 9007	6.50	340090-00-0200-PS	**75**	4000K - 12150lm - CRI>70
			340090-39-0200-PS		3000K - 11482lm - CRI>70

		CLD ZHAGA			LUMEN OUTPUT (tq= 25 °C)
LED	RAL 9007	6.50	340088-0054-0170-PS	**32**	4000K - 5190lm - CRI>70
			340088-3954-0170-PS		3000K - 4905lm - CRI>70
LED	RAL 9007	6.50	340089-0054-0175-PS	**49**	4000K - 8007lm - CRI>70
			340089-3954-0175-PS		3000K - 7567lm - CRI>70
LED	RAL 9007	6.50	340090-0054-0200-PS	**75**	4000K - 12150lm - CRI>70
			340090-3954-0200-PS		3000K - 11482lm - CRI>70

Other available versions

code	W tot	K - ølm - CRI
340088-00-0200-PS	**38**	4000K - 6075lm - CRI>70
340088-39-0200-PS		3000K - 5741lm - CRI>70
340088-00-0235-PS	**45**	4000K - 7095lm - CRI>70
340088-39-0235-PS		3000K - 6705lm - CRI>70
340089-00-0230-PS	**65**	4000K - 10425lm - CRI>70
340089-39-0230-PS		3000K - 9852lm - CRI>70
340090-00-0235-PS	**88**	4000K - 14190lm - CRI>70
340090-39-0235-PS		3000K - 13410lm - CRI>70
340090-00-0270-PS	**103**	4000K - 16204lm - CRI>70
340090-39-0270-PS		3000K - 15313lm - CRI>70
340090-00-0310-PS	**118**	4000K - 18473lm - CRI>70
340090-39-0310-PS		3000K - 17457lm - CRI>70

Total wattage setup: this can be done by programming the drive current values requested when ordering/purchasing the fixture (up to 204Wupon request).



ACCESSORIES

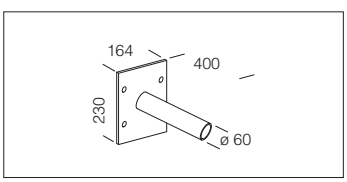

acc. 248 wall bracket	
RAL 9006	997708-00
In steel. For wall mounting. Connection Ø60. Kg= 1.30	

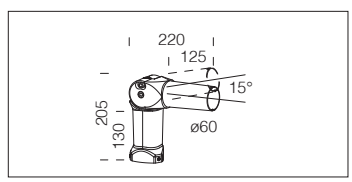

acc. 405 articulated connection	
RAL 9006	991385-00
Adjustable connection at 90°. To be used for pole installation Ø60.	

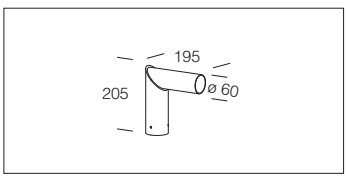

acc. 205 mast-top mounting	
RAL 9006	426941-00
In steel. To be used for mast-top installation on Ø60 pole. 90° fixed.	

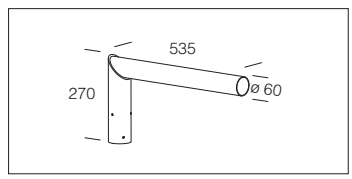

acc. 205 mast-top mounting	
RAL 9006	426948-00
In steel. To be used for mast-top installation on Ø60 pole. 90° fixed.	

GENERAL CHARACTERISTICS

Housing: in die-cast aluminium and designed with a very small surface exposed to wind. Cooling fins are integrated into the cover.

Pole connection: in die-cast aluminium and with gaskets to secure the frame. Suited for poles with a diameter 45-60mm.

Optics: in PMMA, highly resistant to temperature and UV radiation.

Coating: le cycle de peinture poudre, entièrement automatisé, se compose d'une peinture polyester, résistante à la corrosion au brouillard salin et stabilisée aux rayons UV.

Equipment: silicone rubber gasket; external screws and bolts in stainless steel; air recirculation valve. Waterproof connector for quick installation with **no need to open the fixture.**

Standard supply: automatic temperature control inside the device with automatic resetting. With dedicated electronic device to protect the LED module.

OTHER CHARACTERISTICS

SURGE

Electronic safety device to protect the LED module and the related ballast compliant with EN 61547.
It works in two modes:
- differential mode: surge between power cables and between the phase and neutral.
- common mode: surge between power, L/N and ground cables or between the fixture's body if it is of class II and installed on a metal pole.

The fixture's design is configured to minimise wind exposure surfaces: L=354cm² - S=692cm²



LOW FLICKER

Product with a very low flicker; uniform light for greater eye protection.

OTHER INFORMATION



Anti-light pollution optical system : the modularity of the optical system, the solutions used for the electronic circuit design and the optimal control of operating temperatures, make the Susa line a highly professional, flexible and reliable product, capable of guaranteeing huge application advantages in several situations

UPON REQUEST



Protective coating recommended for marine environments within 5 km of the sea.

Available with **subcode -90 version with clear and tempered glass diffuser**, 4 mm thick, resistant to thermal shock and impacts (UNI-EN 12150-1 : 2001).

Upon request, it is possible to order Tunnel LED with optics having photometric distributions that allow considerable design flexibility.

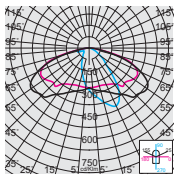

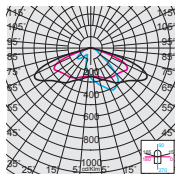

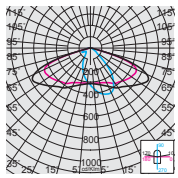

CLD PROG

PROG (CLD PROG) AVAILABLE FUNCTIONS

Luminous flux setup	This can be done by programming the drive current values requested when ordering/purchasing the fixture
CLO (Constant Light Output)	The lighting fixture maintains a constant light output throughout its entire service life

LIGHTING POINT MANAGEMENT OPTIONS ON REQUEST

possibility to choose different lighting point management systems according to the system's needs:

1-10V dimming ordered with **sub-code -12**	Adjustment range from 10%-100% with 1-10V
Virtual Midnight order with **subcode -30**	Stand-alone system with automatic luminous flux reduction in **4 steps**. To increase energy savings at night when there are fewer people and vehicles around, a lighting fixture can be programmed according to a specific profile (customizable on request). The fixture reduces its luminous flux through a self-learning process which, depending on the previous switching on and off times, will determine a hypothetical "virtual midnight". This is the average value between the time the fixture is switched on (sunset) and switched off (sunrise). The "virtual midnight" is the reference point for dimming lights according to the desired profile. The device is integrated in the LED driver and therefore does not require any modification to the system. *In order for the system to function correctly, the system must be adjusted by a device that turns the system on and off on a regular basis every day.* ***ATTENTION:*** *original settings and time slots for the "virtual midnight" value can be customized in up to 5 steps upon request.*

Factory settings

Time	Flux
on ÷ 22:00	100%
22:00 ÷ 23:30	75%
23:30 ÷ 02:30	50%
02:30 ÷ 04:00	75%
04:00 ÷ off	100%

PLC remote control ordered with **sub-code -0078**	Point-to-point and system management and diagnosis system

For more information see page XX-XXIII

Example with Zhaga Socket (subcode -0054)



LUMINAIRE DESIGNED FOR INSTALLATION ON NEMA OR ZHAGA SOCKET: to monitor and manage public lighting centrally, lighting fixtures will always be more equipped with wireless controls that will allow their integration with the IoT. Today the market offers two solutions: **NEMA and ZHAGA**. Both solutions offer an electrical and mechanical connection between the control antenna and the lighting fixture.

Nema Socket order with **subcode -40** (sealing cap to be ordered separately)	Mounted directly on the fixture's body, ideal for remote lighting management applications.
Zhaga Socket order with **subcode -0054** (complete with sealing cap)	



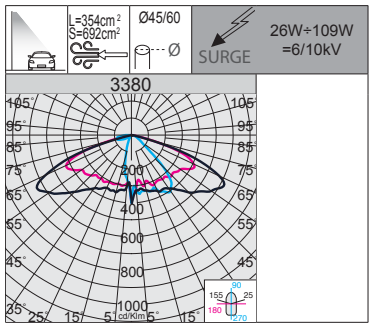

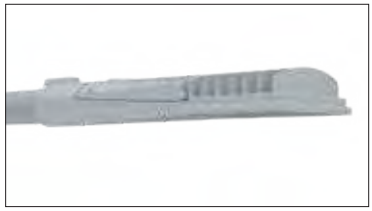

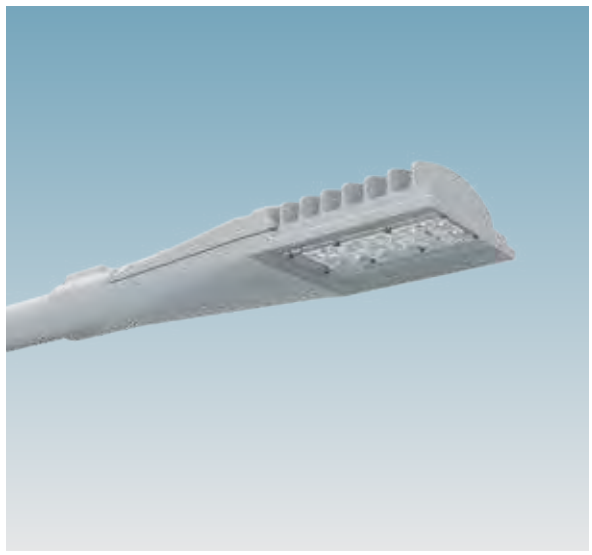

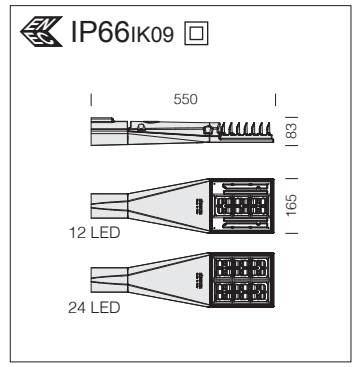

LED: power factor ≥0,92. Luminous flux maintenance:		
90%	100.000h (L90B10)	350mA
90%	100.000h (L90B10)	530mA
90%	80.000h (L90B10)	700mA

Version best suited for medium-height poles.

3380 Susa ME - residential amenities

		CLD PROG			LUMEN OUTPUT (tq= 25 °C)
LED	colour	weight	code	W tot	K - ølm 350mA - CRI
LED	RAL 9006	2.50	340504-00	**26**	4000K - 4266lm - CRI 70
			340504-39		3000K - 4010lm - CRI 70
LED	RAL 9006	2.80	340505-00	**52**	4000K - 8530lm - CRI 70
			340505-39		3000K - 8018lm - CRI 70
					K - ølm 530mA - CRI
LED	RAL 9006	2.50	340500-00	**40**	4000K - 6210lm - CRI 70
			340500-39		3000K - 5837lm - CRI 70
LED	RAL 9006	2.80	340501-00	**80**	4000K - 12410lm - CRI 70
			340501-39		3000K - 11665lm - CRI 70
					K - ølm 700mA - CRI
LED	RAL 9006	2.50	340502-00	**54**	4000K - 7895lm - CRI 70
			340502-39		3000K - 7421lm - CRI 70
LED	RAL 9006	2.80	340503-00	**109**	4000K - 15790lm - CRI 70
			340503-39		3000K - 14843lm - CRI 70

Available with **subcode -90 version with clear and tempered glass diffuser**, 4 mm thick, resistant to thermal shock and impacts (UNI-EN 12150-1 : 2001).

IP66 IK09

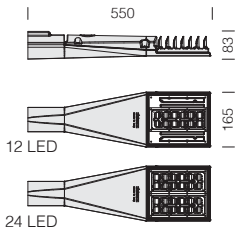

LED: power factor ≥0,92. Luminous flux maintenance:		
90%	100.000h (L90B10)	350mA
90%	100.000h (L90B10)	530mA
90%	80.000h (L90B10)	700mA

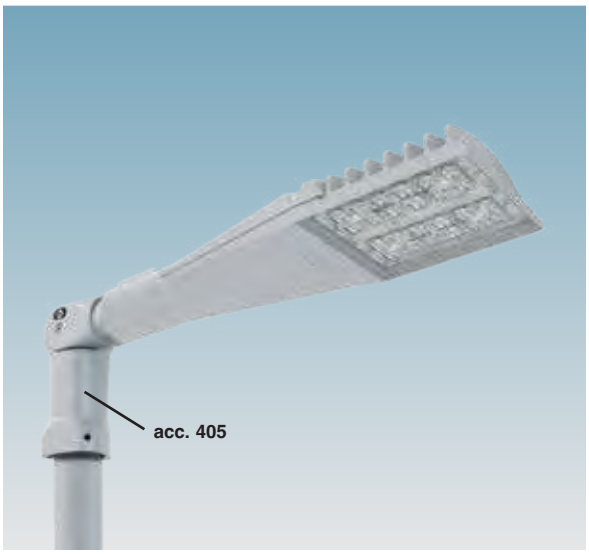

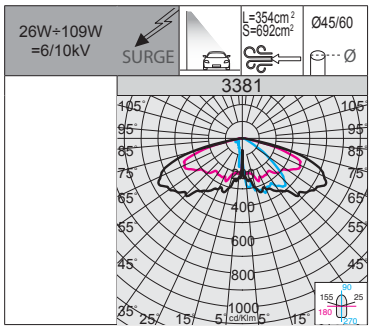



Version best suited for lighting installations where poles are spaced farther apart.

3381 Susa T3 - residential amenities

		CLD PROG			LUMEN OUTPUT (tq= 25 °C)
LED	colour	weight	code	W tot	K - ølm 350mA - CRI
LED	RAL 9006	2.50	340514-00	**26**	4000K - 4479lm - CRI 70
			340514-39		3000K - 4211lm - CRI 70
LED	RAL 9006	2.80	340515-00	**52**	4000K - 8957lm - CRI 70
			340515-39		3000K - 8419lm - CRI 70
					K - ølm 530mA - CRI
LED	RAL 9006	2.50	340510-00	**40**	4000K - 6521lm - CRI 70
			340510-39		3000K - 6129lm - CRI 70
LED	RAL 9006	2.80	340511-00	**80**	4000K - 13031lm - CRI 70
			340511-39		3000K - 12248lm - CRI 70
					K - ølm 700mA - CRI
LED	RAL 9006	2.50	340512-00	**54**	4000K - 8290lm - CRI 70
			340512-39		3000K - 7792lm - CRI 70
LED	RAL 9006	2.80	340513-00	**109**	4000K - 16580lm - CRI 70
			340513-39		3000K - 15585lm - CRI 70

Available with **subcode -90 version with clear and tempered glass diffuser**, 4 mm thick, resistant to thermal shock and impacts (UNI-EN 12150-1 : 2001).

IP66 IK09

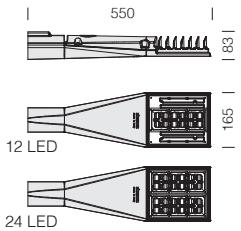

LED: power factor ≥0,92. Luminous flux maintenance:		
90%	100.000h (L90B10)	350mA
90%	100.000h (L90B10)	530mA
90%	80.000h (L90B10)	700mA

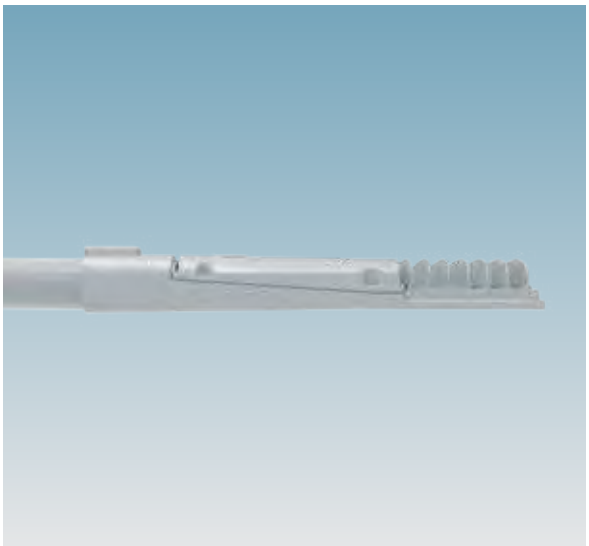

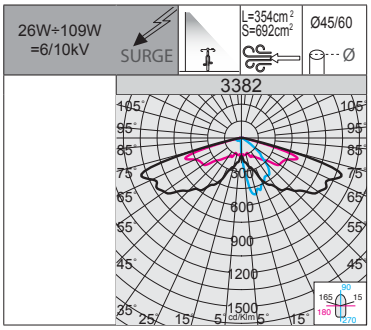



3382 Susa T2 - cycleways

		CLD PROG			LUMEN OUTPUT (tq= 25 °C)
LED	colour	weight	code	W tot	K - ølm 350mA - CRI
LED	RAL 9006	2.50	340524-00	**26**	4000K - 4458lm - CRI 70
			340524-39		3000K - 4190lm - CRI 70
LED	RAL 9006	2.80	340525-00	**52**	4000K - 8914lm - CRI 70
			340525-39		3000K - 8379lm - CRI 70
					K - ølm 530mA - CRI
LED	RAL 9006	2.50	340520-00	**40**	4000K - 6489lm - CRI 70
			340520-39		3000K - 6100lm - CRI 70
LED	RAL 9006	2.80	340521-00	**80**	4000K - 12968lm - CRI 70
			340521-39		3000K - 12190lm - CRI 70
					K - ølm 700mA - CRI
LED	RAL 9006	2.50	340522-00	**54**	4000K - 8250lm - CRI 70
			340522-39		3000K - 7755lm - CRI 70
LED	RAL 9006	2.80	340523-00	**109**	4000K - 16501lm - CRI 70
			340523-39		3000K - 15511lm - CRI 70

Available with **subcode -90 version with clear and tempered glass diffuser**, 4 mm thick, resistant to thermal shock and impacts (UNI-EN 12150-1 : 2001).



Resia is the perfect luminaire for perimeter lighting in industrial areas. Its precision optics deliver uniform glare-free illumination. Designed for easy wall installation, this luminaire is the perfect replacement for older lighting fixtures incorporating traditional lamps.

GENERAL CHARACTERISTICS

Housing: in die-cast aluminium and designed with a very small surface exposed to wind. Cooling fins are integrated into the cover.

Optics: in polycarbonate, highly resistant to temperature and UV radiation.

Coating: the fully automated powder-coating cycle involves a polyester-based, salt-spray corrosion-resistant and UV-stabilised paint.

Equipment: silicone rubber gasket; external screws and bolts in stainless steel; air recirculation valve.

Standard supply: automatic temperature control inside the device with automatic resetting. With dedicated electronic device to protect the LED module.

OTHER CHARACTERISTICS

SURGE

Electronic safety device to protect the LED module and the related ballast compliant with EN 61547.
It works in two modes:
- differential mode: surge between power cables and between the phase and neutral.
- common mode: surge between power, L/N and ground cables or between the fixture's body if it is of class II and installed on a metal pole.

The fixture's design is configured to minimise wind exposure surfaces: L=180cm² - S=530cm²



OTHER INFORMATION

Optics system that allow broad design flexibility guaranteeing high levels of light quality.



Pole connection: in die-cast aluminium and with gaskets to secure the frame according to different inclinations. Adjustable ranges: between -10° and 15° for side mount; and between -10° and 15° for mast-top mounting. Inclination pace: 5°. Suited for poles with a diameter 60mm.

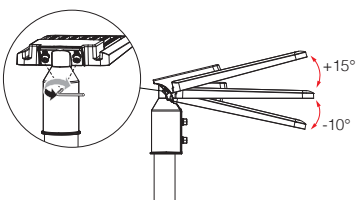

Heat sink: the heat dissipation system is specially designed and made to allow the operation of the LED lights with temperatures ensuring excellent performance/efficiency and durability.



ACCESSORIES

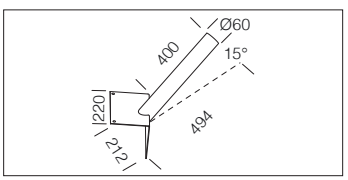

acc. 49 Ø60 corner bracket	
RAL 9006	997802-00
In steel. For wall corner mounting. Connection Ø60. Angle 15°.	

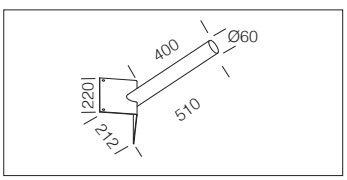

acc. 249 Ø60 corner bracket	
RAL 9006	997803-00
In steel. For wall corner mounting. Connection Ø60.	

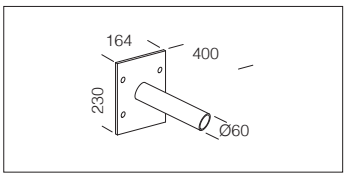

acc. 248 Ø60 wall bracket	
RAL 9006	997708-00
In steel. For wall mounting. Connection Ø60.	

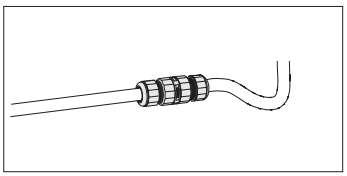

acc. 339 Connector (3-pole)
993854-00
To be purchased to facilitate the connection of the fixture to mains system.

IP65 IK08

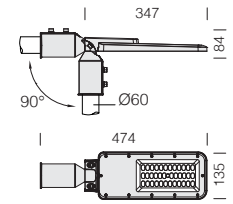

LED: power factor ≥0.9.
Luminous flux maintenance 80%: 80.000h (L80B20).



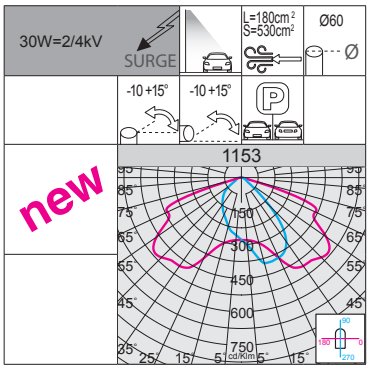



RG0 Ethr
+45 C° -20
U.V.
LOW FLICKER
3000K
4000K

1153 Resia

		CLD			LUMEN OUTPUT (tq= 25 °C)
LED	colour	weight	code	W tot	K - ølm - CRI
LED	grey	0.90	313148-00	**30**	4000K - **3000lm** - CRI 80
			313148-39		3000K - **2850lm** - CRI 80

IP65 IK08

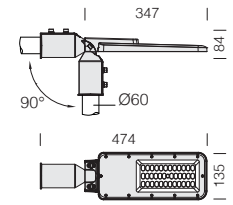

LED: power factor ≥0.9.
Luminous flux maintenance 80%: 80.000h (L80B20).

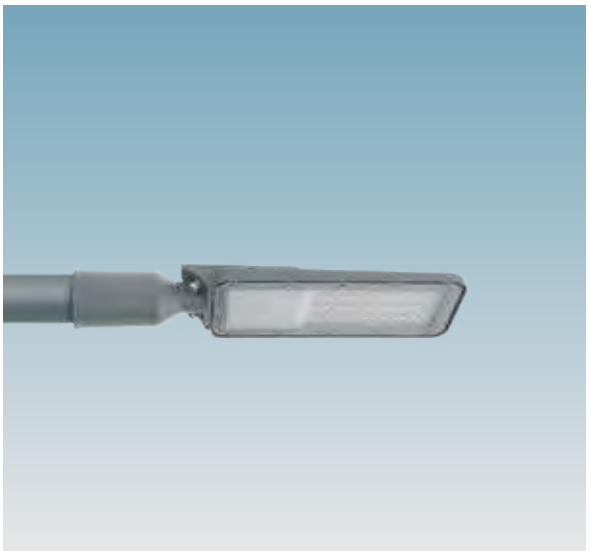

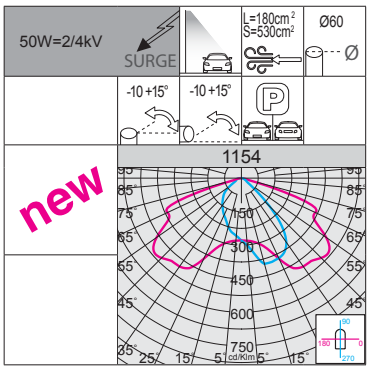



RG0 Ethr
+45 C° -20
U.V.
LOW FLICKER
3000K
4000K

1154 Resia

		CLD			LUMEN OUTPUT (tq= 25 °C)
LED	colour	weight	code	W tot	K - ølm - CRI
LED	grey	1.20	313149-00	**50**	4000K - **5000lm** - CRI 80
			313149-39		3000K - **4750lm** - CRI 80



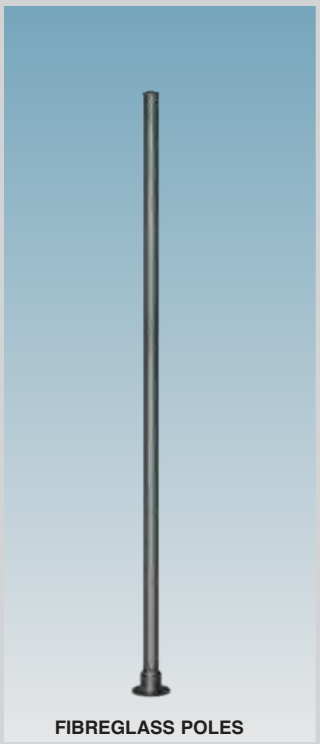

FIBREGLASS POLES

p. 576

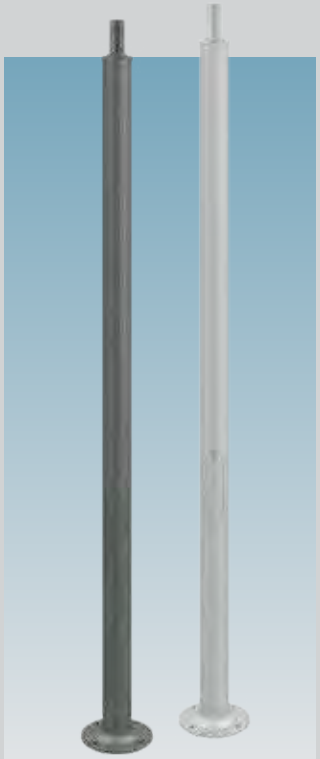

FLUTED POLES

Ø 100 p. 578
Ø 120 p. 580



"CONE-SHAPED" - "URBAN" POLE

CONE-SHAPED p. 582
URBAN p. 584

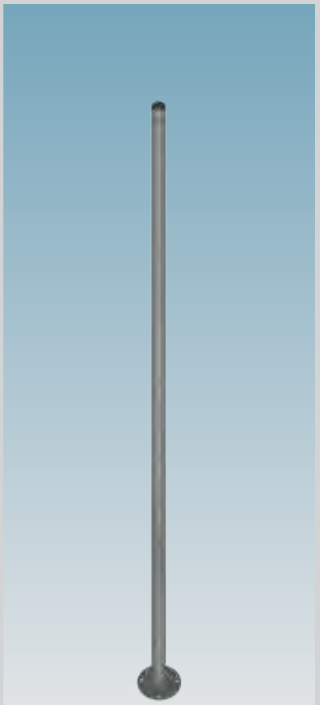

STEEL POLE

Ø 102 p. 586

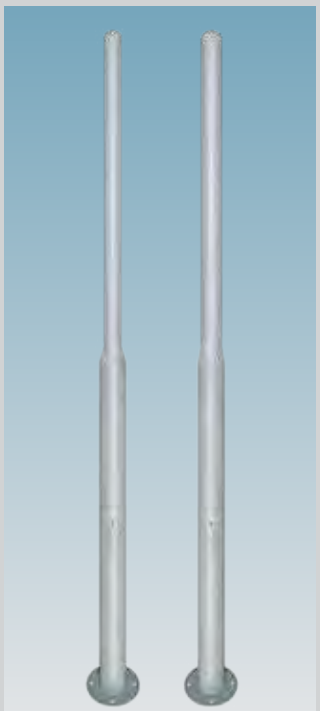

STEEL POLE

Ø 102 - 159 p. 588
Ø 120 - 159 p. 590

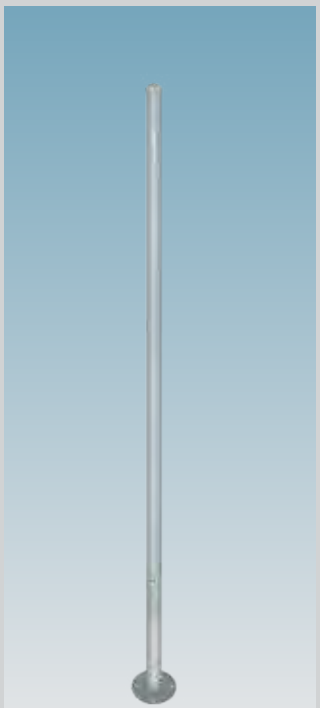

STEEL POLE

Ø 120 p. 592



"LIBERTY" POLE

p. 594



"VIRGOLA" POLE

p. 596



SECTOR p. 598



OLIVA p. 599

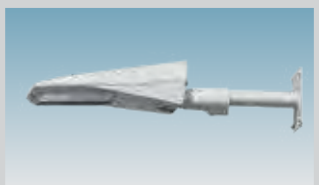

ACCESSORIES p. 600

Pole performance features

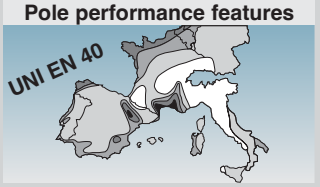

p. 601



Fibreglass poles have a round or cone-shaped cross-section (dimensions depend on mechanical requirements).
Compared with aluminium or steel poles they offer the following advantages:
- lighter weight
- less maintenance
- surfaces are not attacked by corrosive agents
- electrically insulated
- less dangerous when impact occurs
- extremely flexible in the wind.

Certificated poles: These poles are recommended for small-size luminaires (decorative factor), in private areas, (anti-vandalism factor). They can be installed both on a base or buried according to measurements.

ACCESSORIES

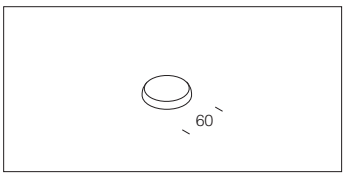

acc. 115 pole cap	
black	991331-00
In fiber glass nylon. To apply to Ø60 mm pole. End cap for the pole top.	

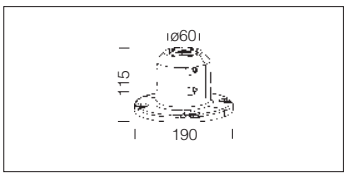

acc. 50 base for acc 5	
black	991216-00
In f.g. nylon; supplied with burying anchor. For use with poles max 1900 high. Connection Ø 60.	

Legend Poles pictograms

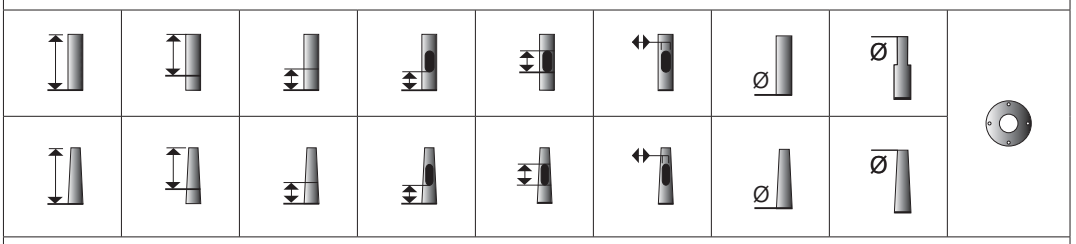

Total height pole	Height above ground or spotlight	Height of pole sunk into the ground	Distance ground/ inspection window (if present)	Height of inspection window (if present)	Width of inspection of window (if present)	Diameter of pole in relation to the ground	Diameter head/Pole	Diameter of base and log bolt holes (if present)

Fibreglass poles: table of general features

h pole	diam. Ø	recommended on base	recomended sinking h. mn
1000	Ø 60	acc. 50	
1500	Ø 60	acc. 50	
2000	Ø 60	acc. 50	250
2500	Ø 60		300
3000	Ø 60		350
3600	Ø 60/120		400
4600	Ø 60/137		500
5600	Ø 60/154		600

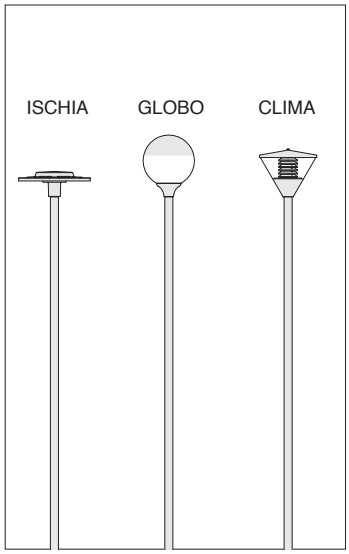

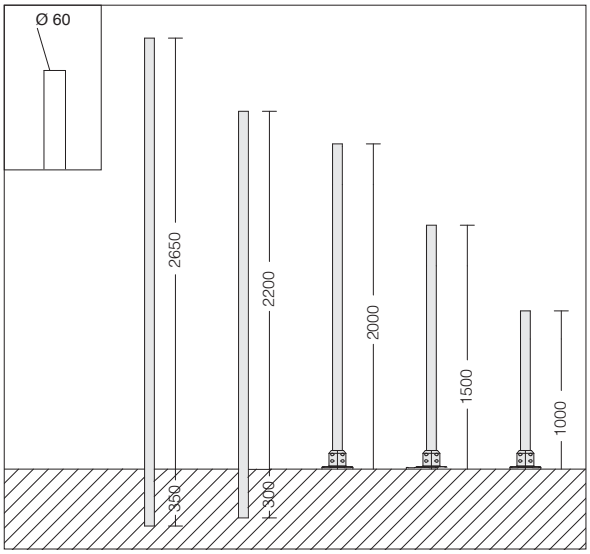



acc 5 pole ø 60 without window

colour	code				Ø	Ø
black	991903-00	1000	800	200		
black	991904-00	1500	1250	250		
black	991905-00	2000	1750	250	**ø 60**	**ø 60**
black	991906-00	2500	2200	300		
black	991907-00	3000	2650	350		

Cone-shaped fibreglass pole, black, corrosion resistant, mechanical high-resistance and UV stabilized.

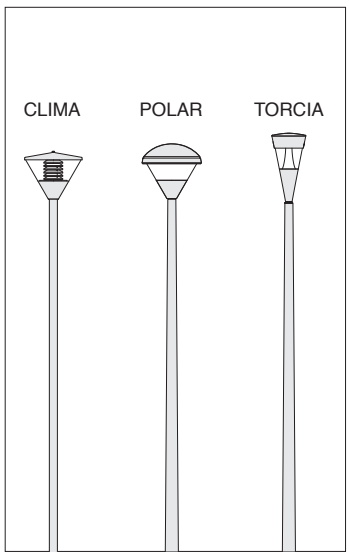

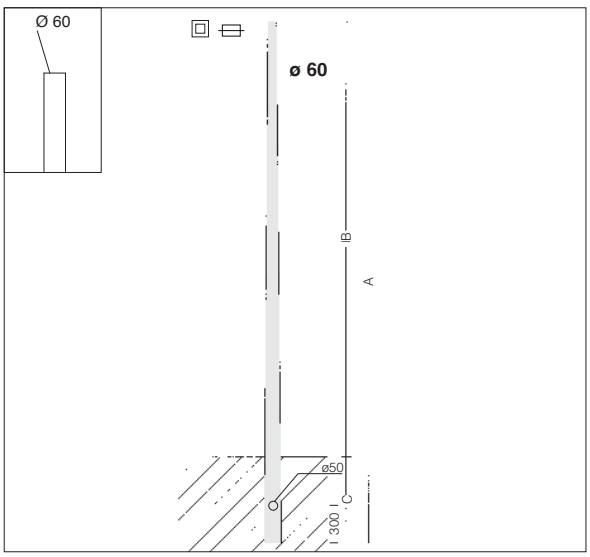



acc 1278 cone-shaped pole without window

colour	code				Ø	Ø
black	428617-00	3600	3200	400	**ø 120**	
black	428618-00	4600	4100	500	**ø 137**	**ø 60**
black	428619-00	5600	5000	600	**ø 154**	

Cone-shaped pole in f.g., black, corrosion-proof, high mechanical resistance and UV-stabilised.

Fluted pole ø 100

Fluted pole made of extruded aluminium, anodised by 15/20µ thick tin salt electrocoating; graphite or natural oxidised colour.
With die-cast inspection window (186x45mm), protective fuse holder, 16A fuse, 4-pole/3-way removable terminal block = 10 sqmm, 2,5 sqmm connection. With hole for insertion of power supply cable. Die-cast aluminium adapter, Ø60 mm. For the version with base, 4 log bolts to be sunk into the ground, bolts and lids have to be purchased. Standard insulation class II.
When using Insulation Class I fixtures, appropriate grounding connections should be included in the system.
NOTE. Before selecting the appropriate pole, make all necessary wind pressure resistance tests, pursuant to the Standards or Legislative Decrees in force in the countries where the pole will be mounted and based on the assumed loads specified in Standard EN 40-3-1

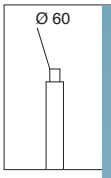

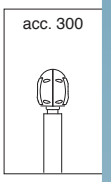

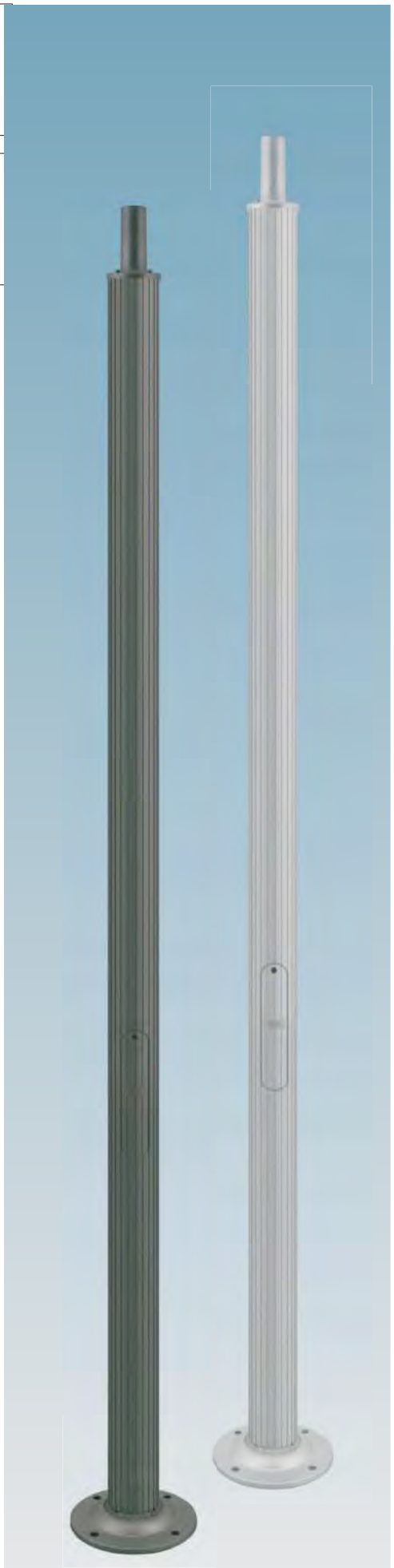

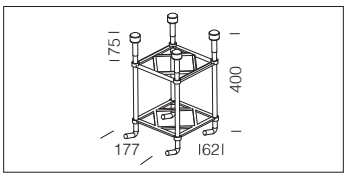

acc. 299 log bolts
991396-00
Log bolts are to be always bought with the pole 1408.

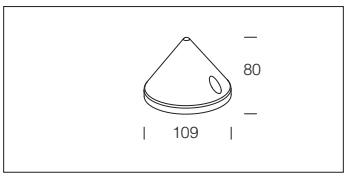

acc. 367 cover for poles	
ox. nat.	426998-00
graphite	426997-00
Made of aluminium. To be used when a particular aesthetic finish is desired.	

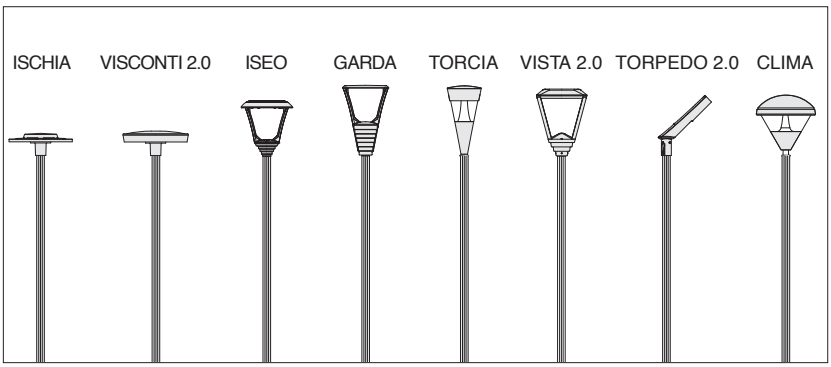

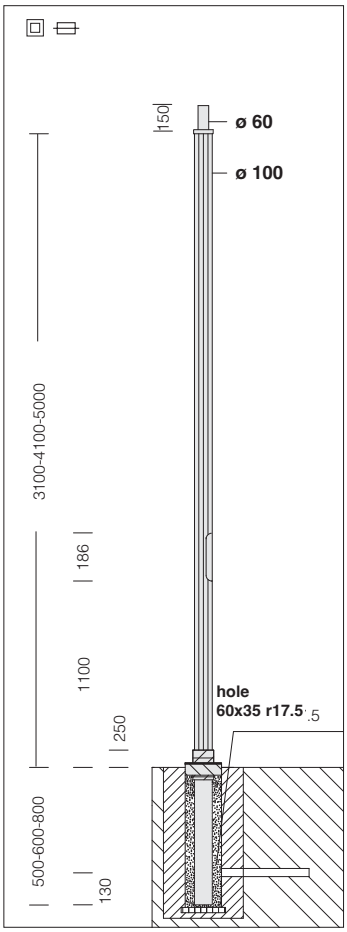

Inspection window with easily removable terminal block for quick connection.

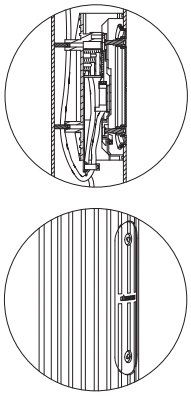

The size of the plinth depends on the type of pole, the composition used, the type of terrain on which the plinth stands, and the material of which it is made.

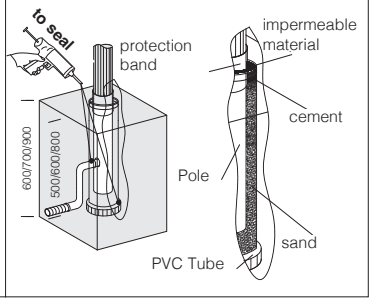



acc. 1409 fluted pole Ø 100

colour	code								
oxy natural	426334-00	3600	3100	500	1100	186	45	**Ø 100**	Ø 60
oxy natural	426335-00	4700	4100	600					
oxy natural	426336-00	5800	5000	800					
graphite	426327-00	3600	3100	500					
graphite	426328-00	4700	4100	600					
graphite	426329-00	5800	5000	800					

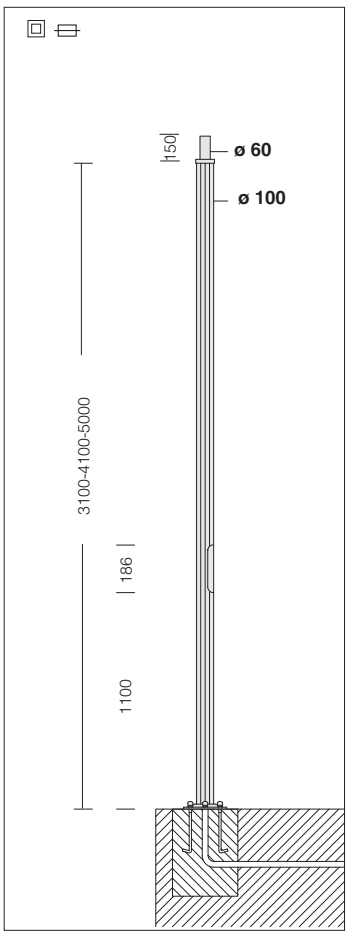

Inspection window with easily removable terminal block for quick connection.

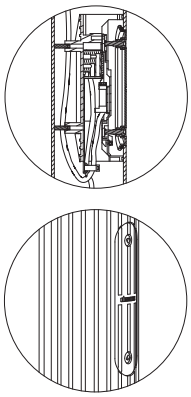

For correct installation of pole and base, the ceiling cap should be fitted as shown in the assembly drawing featured opposite.

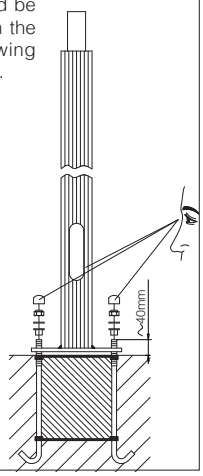

Cement base dimensions (subject to soil variations) for underground sinking of the 4 log bolts of acc. 1408.

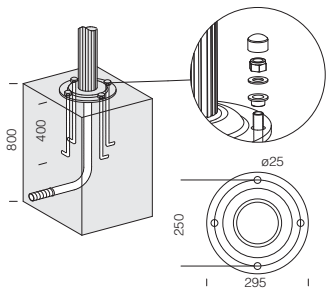

acc. 1408 fluted pole with base Ø 100

colour	code							
oxy natural	426337-00	3100	1100	186	45	**Ø 100**	Ø 60	Ø 295 hole Ø 25
oxy natural	426338-00	4100						
oxy natural	426339-00	5000						
graphite	426324-00	3100						
graphite	426325-00	4100						
graphite	426326-00	5000						

Log bolts are to be bought separately acc. 299.

Fluted pole ø 120

Fluted pole made of extruded aluminium, anodised by 15/20µ thick tin salt electrocoating; graphite or natural oxidised colour.
With die-cast inspection window (186x45mm), protective fuse holder, 16A fuse, 4-pole/3-way=10mm^2, derivation 2,5 sqmm, removable terminal block = 6 sqmm, 4 sqmm connection. With hole for insertion of power supply cable. Die-cast aluminium adapter, Ø60 mm.
For the version with base, 4 log bolts to be sunk into the ground, bolts and lids have to be purchased. Standard insulation class II.
When using Insulation Class I fixtures, appropriate earthing connections should be included in the system.

NOTE. Before selecting the appropriate pole, make all necessary wind pressure resistance tests, pursuant to the Standards or Legislative Decrees in force in the countries where the pole will be mounted and based on the assumed loads specified in Standard EN 40-3-1

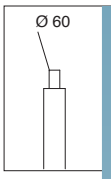

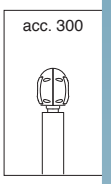

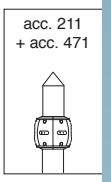

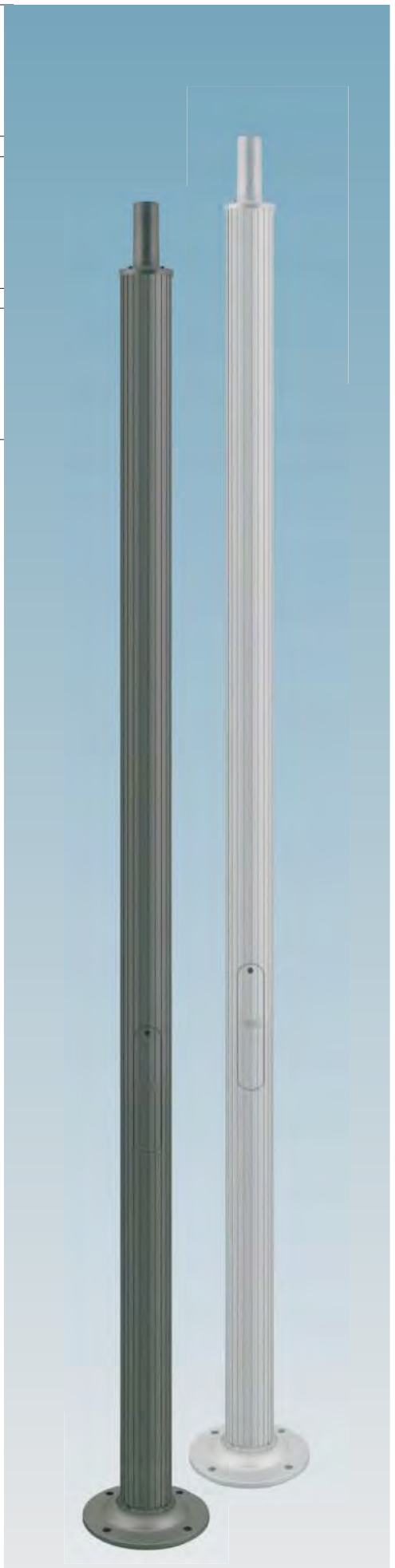

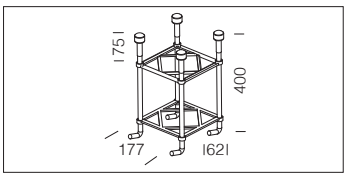

acc. 299 log bolts
991396-00
Log bolts are to be always used with the pole 1508.

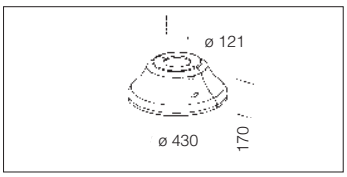

acc. 222 base pole cover	
grey	991378-00
graphite	991381-00
Made of die-cast aluminium. To be used as base pole cover acc. 1508.	

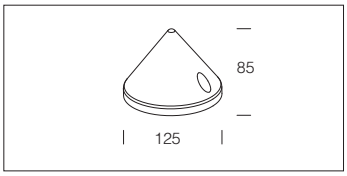

acc. 471 acc. 367 cover for poles	
grey	991461-00
graphite	991462-00
Made of aluminium. To be used when a particular aesthetic finish is desired.	

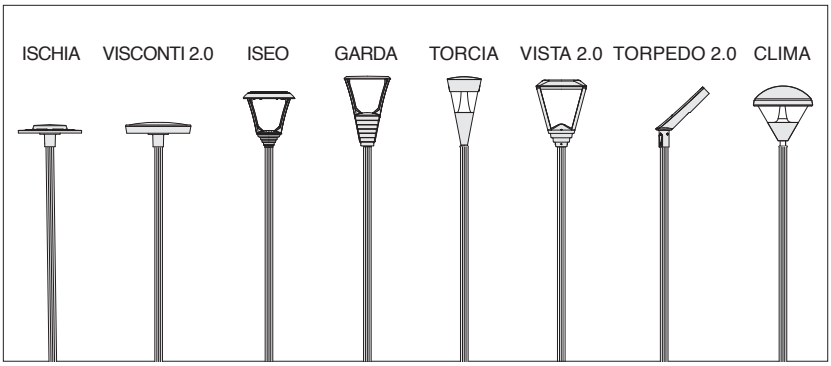

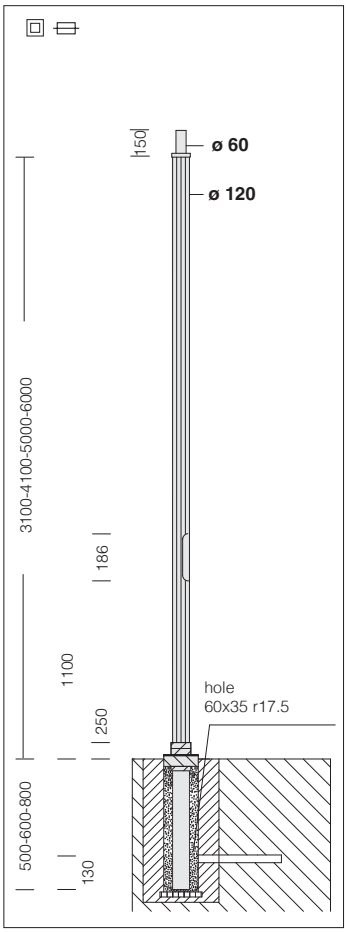

Inspection window with easily removable terminal block for quick connection.

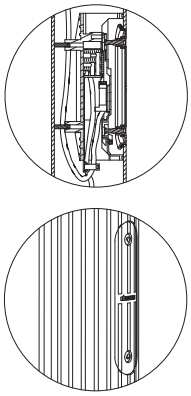

The size of the plinth depends on the type of pole, the composition used, the type of terrain on which the plinth stands, and the material of which it is made.

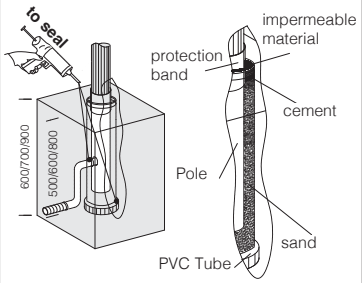



CE U.V.

acc. 1509 fluted pole Ø 120

colour	code								
oxy natural	426374-00	3600	3100	500	1100	186	45	**Ø 120**	Ø 60
oxy natural	426375-00	4700	4100	600					
oxy natural	426376-00	5800	5000	800					
oxy natural	426373-00	6800	6000	800					
graphite	426366-00	3600	3100	500					
graphite	426367-00	4700	4100	600					
graphite	426368-00	5800	5000	800					
graphite	426369-00	6800	6000	800					

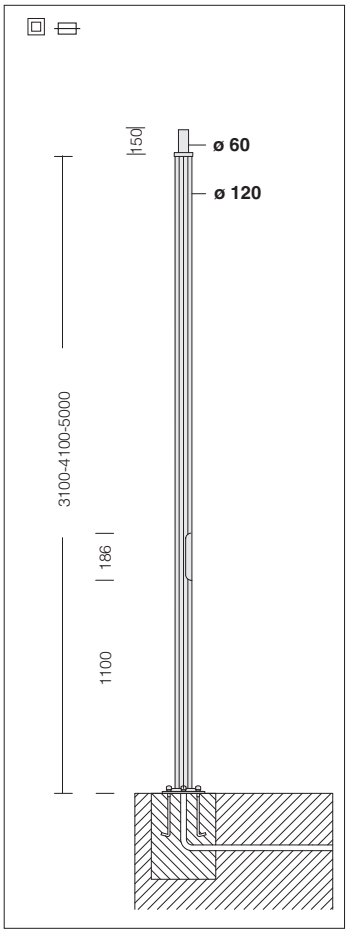

Inspection window with easily removable terminal block for quick connection.

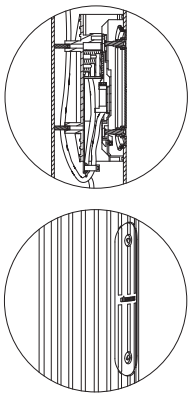

For correct installation of pole and base, the ceiling cap should be fitted as shown in the assembly drawing featured opposite.

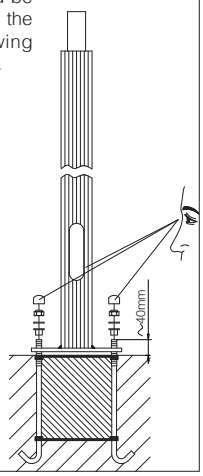

Cement base dimensions (subject to soil variations) for underground sinking of the 4 log bolts of acc. 1508.

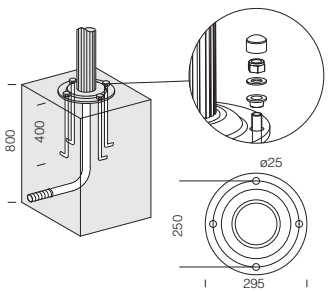

CE U.V.

acc. 1508 fluted pole with base Ø 120

colour	code							
oxy natural	426377-00	3100	1100	186	45	**Ø 120**	Ø 60	Ø 295 hole Ø 25
oxy natural	426378-00	4100						
oxy natural	426379-00	5000						
graphite	426362-00	3100						
graphite	426363-00	4100						
graphite	426364-00	5000						

Log bolts are to be bought separately acc. 299.

Cone-shaped poles

Hot-dip galvanised steel poles. With hole for insertion of power supply cable, pole-head connection, ø60.
For the version with base, 4 log bolts to be sunk into the ground, bolts and lids have to be purchased. Size of inspection window 38x132 (h 3 000) - 45x186 (h 4000-5000-6000-7000-8000), supplied with protection fuse holder, 2 fuses, 16A, removable terminal block, 4 poles/3 holes = 10sqmm and shunt 2,5sqmm.
Standard insulation class II. When using Insulation Class I fixtures, appropriate grounding connections should be included in the system.

NOTE: The possibility to attach an assembly to the pole is subject to a wind pressure resistance assessment in the areas regulated by CNR-UNI standard 10032-67, according to load assumptions in UNI standard 40/6.

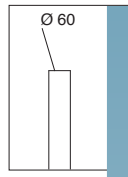

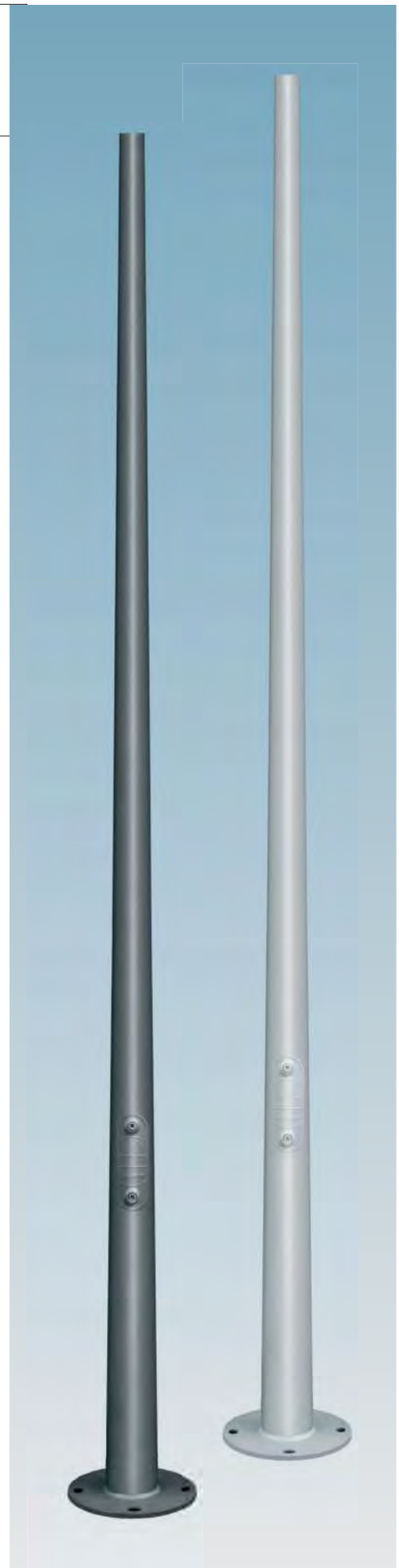

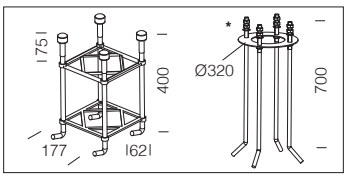

acc. 299 log bolts	
h=3000/4000/5000/6000	991396-00
h=7000/8000	* 991314-00
Log bolts are to be always used with the pole 1480.	

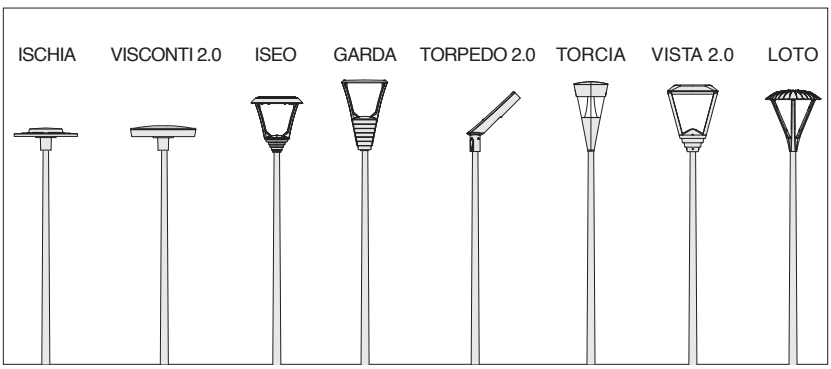

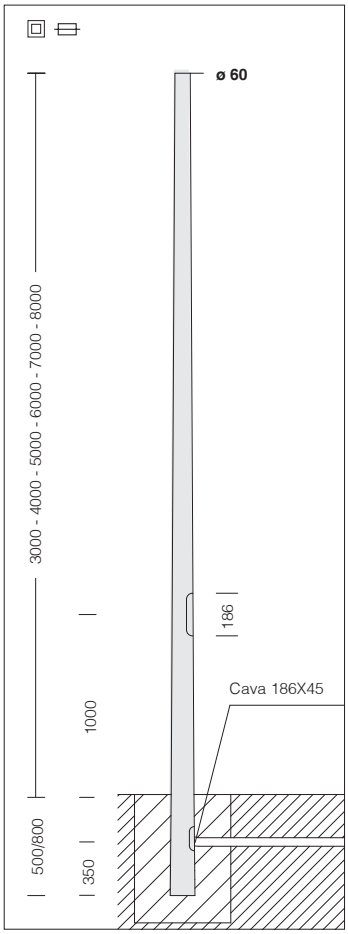

ON REQUEST
Possibility of supplyng poles with the following colour paint finishes: pearl, blue, RAL RAL 3001, 5011, 7026, 9011, 8015, 5005, 7024, 7016, 7022, 7037, 6024, 8019, 6011, 1015, 9003, 1021.

Inspection door with easily removable terminal board for quick connection.

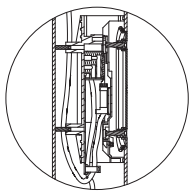

Concrete base dimensions (subject to soil variations).

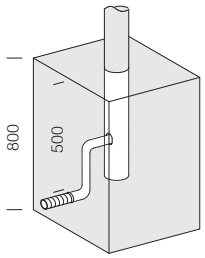

acc. 1481 - steel cone-shaped to be buried-with window

colour	code							Ø	Ø
RAL 9006	425150-00	3500	3000	500	1000	186	45	**Ø 89**	Ø 60
RAL 9006	425151-00	4500	4000	500				**Ø 89**	
RAL 9006	425152-00	5500	5000	500				**Ø 102**	
RAL 9006	425153-00	6800	6000	800				**Ø 127**	
RAL 9006	425158-00	7800	7000	800				**Ø 127**	
RAL 9006	425167-00	8800	8000	800				**Ø 139**	
graphite	425154-00	3500	3000	500				**Ø 89**	
graphite	425155-00	4500	4000	500				**Ø 89**	
graphite	425156-00	5500	5000	500				**Ø 102**	
graphite	425157-00	6800	6000	800				**Ø 127**	
graphite	425159-00	7800	7000	800				**Ø 127**	
graphite	425168-00	8800	8000	800				**Ø 139**	
RAL 7021	425160-00	3500	3000	500				**Ø 89**	
RAL 7021	425161-00	4500	4000	500				**Ø 89**	
RAL 7021	425162-00	5500	5000	500				**Ø 102**	
RAL 7021	425163-00	6800	6000	800				**Ø 127**	
RAL 7021	425164-00	7800	7000	800				**Ø 127**	
RAL 7021	425165-00	8800	8000	800				**Ø 139**	

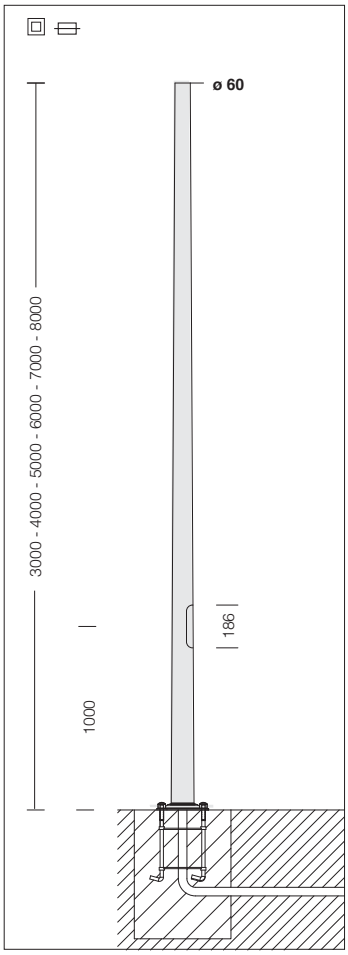

ON REQUEST
Possibility of supplyng poles with the following colour paint finishes: pearl, blue, RAL RAL 3001, 5011, 7026, 9011, 8015, 5005, 7024, 7016, 7022, 7037, 6024, 8019, 6011, 1015, 9003, 1021.

Inspection door with easily removable terminal board for quick connection.

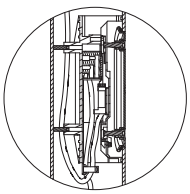

Concrete base dimensions (subject to soil variations).

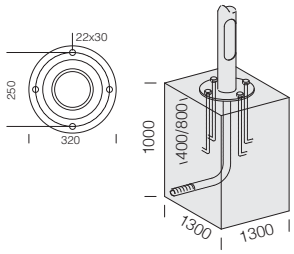

acc. 1480 - steel cone-shaped with base-with window

colour	code					Ø	Ø	
RAL 9006	425050-00	3000	1000	186	45	**Ø 89**	Ø 60	Ø 320 hole Ø 22x30
RAL 9006	425051-00	4000				**Ø 89**		
RAL 9006	425052-00	5000				**Ø 102**		
RAL 9006	425053-00	6000				**Ø 127**		
RAL 9006	425058-00	7000				**Ø 127**		
RAL 9006	425067-00	8000				**Ø 139**		
graphite	425054-00	3000				**Ø 89**		
graphite	425055-00	4000				**Ø 89**		
graphite	425056-00	5000				**Ø 102**		
graphite	425057-00	6000				**Ø 127**		
graphite	425059-00	7000				**Ø 127**		
graphite	425068-00	8000				**Ø 139**		
RAL 7021	425086-00	3000				**Ø 89**		
RAL 7021	425087-00	4000				**Ø 89**		
RAL 7021	425088-00	5000				**Ø 102**		
RAL 7021	425089-00	6000				**Ø 127**		
RAL 7021	425072-00	7000				**Ø 127**		
RAL 7021	425073-00	8000				**Ø 139**		

Log bolts are to be bought separately acc. 299.

Tapered steel lighting pole. With hole for insertion of power supply cable, pole-head connection, ø60.
For the version with base, 4 log bolts to be sunk into the ground, bolts and lids have to be purchased. Size of inspection window 38x132 (h 3 000) - 45x186 (h 4000-5000-6000), supplied with protection fuse holder, 2 fuses, 16A, removable terminal block, 4 poles/3 holes = 6sqmm and shunt 4sqmm.
Standard insulation class II. When using Insulation Class I fixtures, appropriate grounding connections should be included in the system.

NOTE. Before selecting the appropriate pole, make all necessary wind pressure resistance tests, pursuant to the Standards or Legislative Decrees in force in the countries where the pole will be mounted and based on the assumed loads specified in Standard EN 40-3-1

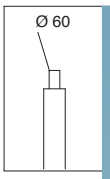

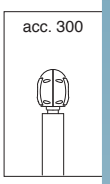



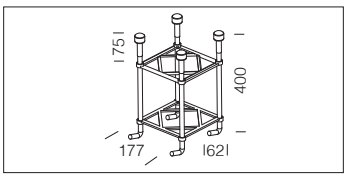

acc. 299 log bolts	
	991396-00
Log bolts are to be always used with the pole 1477.	

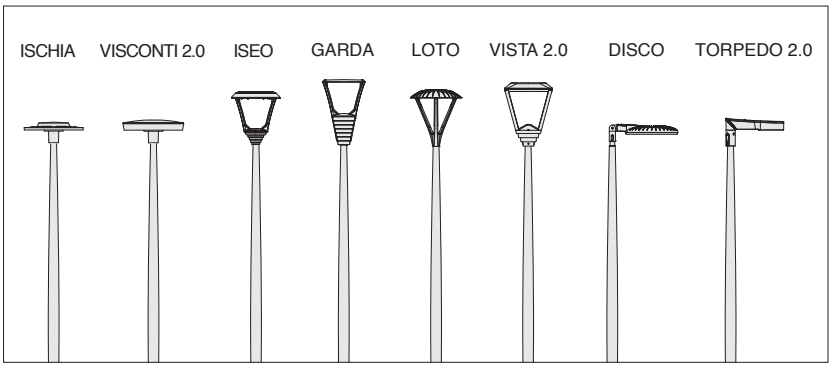

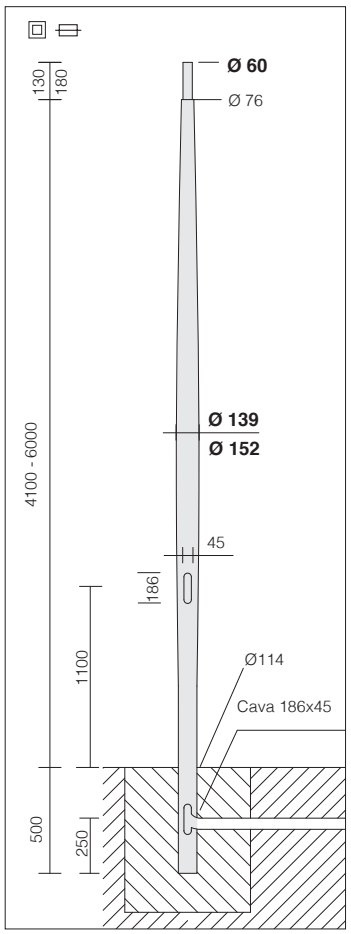

Inspection door with easily removable terminal board for quick connection.

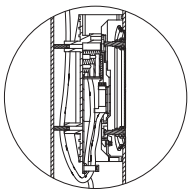

Concrete base dimensions (subject to soil variations).

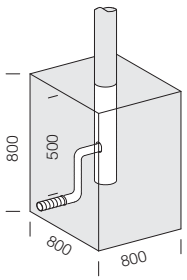

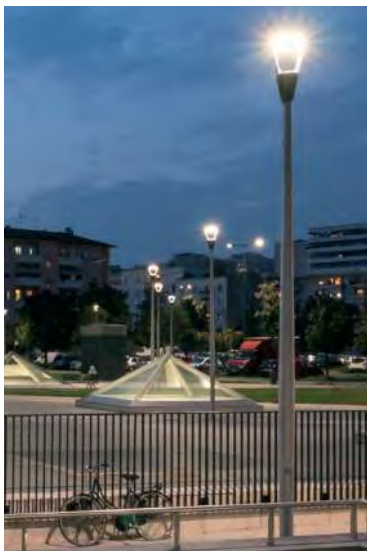

acc. 1478 - pole Urban to be buried

colour	code							Ø	Ø
RAL 9006	425370-00	4600	4100	500	1100	186	45	Ø 114	Ø 60
graphite	425371-00	4600	4100	500					
RAL 7021	425372-00	4600	4100	500					
RAL 9006	425373-00	6500	6000	500				Ø 127	
graphite	425374-00	6500	6000	500					

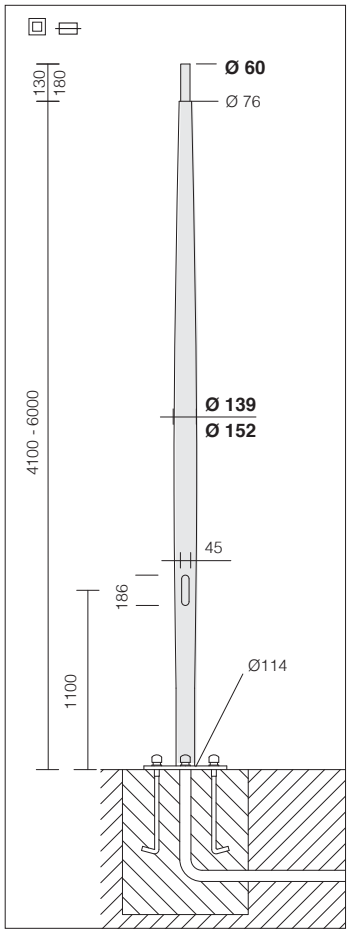

Inspection door with easily removable terminal board for quick connection.

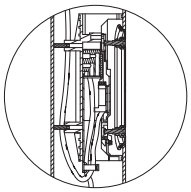

Concrete base dimensions (subject to soil variations).

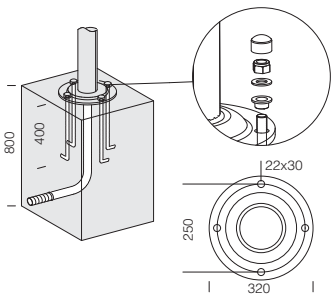



acc. 1477 - pole Urban with base

colour	code					Ø	Ø	
RAL 9006	425360-00	4100	1100	186	45	Ø 114	Ø 60	Ø 320 22x30
graphite	425361-00	4100						
RAL 7021	425362-00	4100						
RAL 9006	425363-00	6000				Ø 127		
graphite	425364-00	6000						

Log bolts are to be bought separately acc. 299.

Steel pole ø 102

Steel pole ø 102. With die-cast aluminium inspection window (186x45mm), complete with 2 protection fuse holders, 2 fuses, 16A, removable 4-pole terminal block. With hole for insertion of power supply cable. For the version with base, 4 log bolts to be sunk into the ground, bolts and lids have to be purchased.

NOTE. Before selecting the appropriate pole, make all necessary wind pressure resistance tests, pursuant to the Standards or Legislative Decrees in force in the countries where the pole will be mounted and based on the assumed loads specified in Standard EN 40-3-1

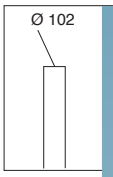

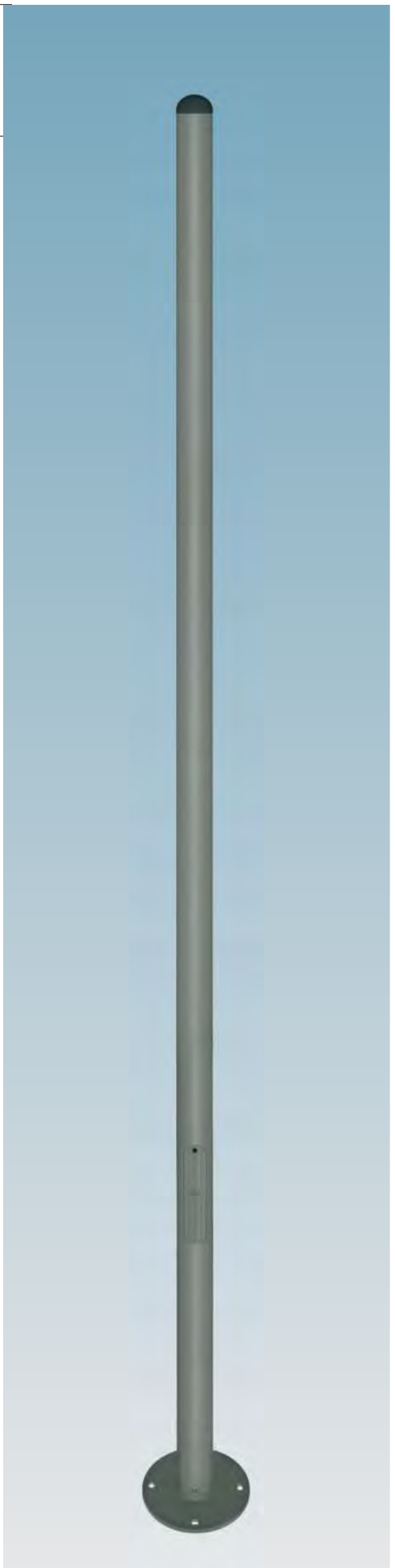

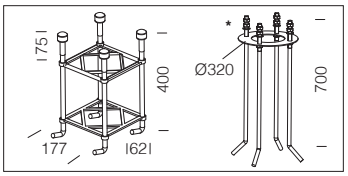

acc. 299 log bolts	
h=5000	991396-00
h=7000	* 991314-00
Log bolts are to be always used with the pole 1485.	

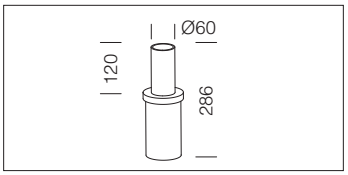

acc. 528 mast-top adapter	
graphite	991463-00
grey	991463-2118
It enables the installation of fixtures on top of poles in single-lamps configurations.	

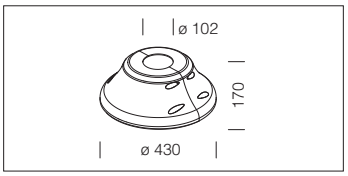

acc. 222 base pole cover	
graphite	991315-00
grey	991399-00
To be used as base pole cover acc. 1485/1487	

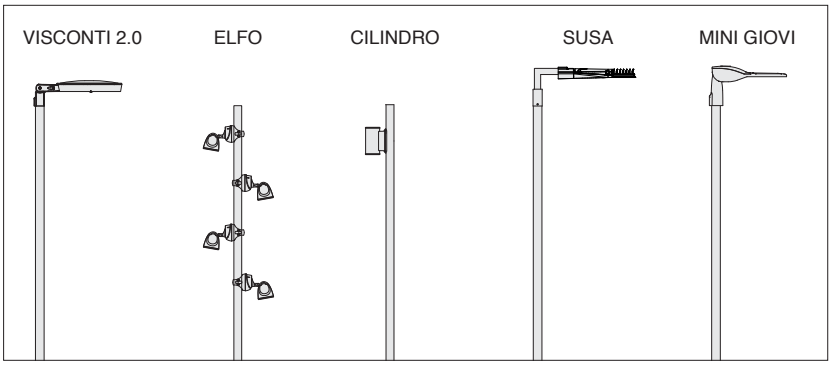

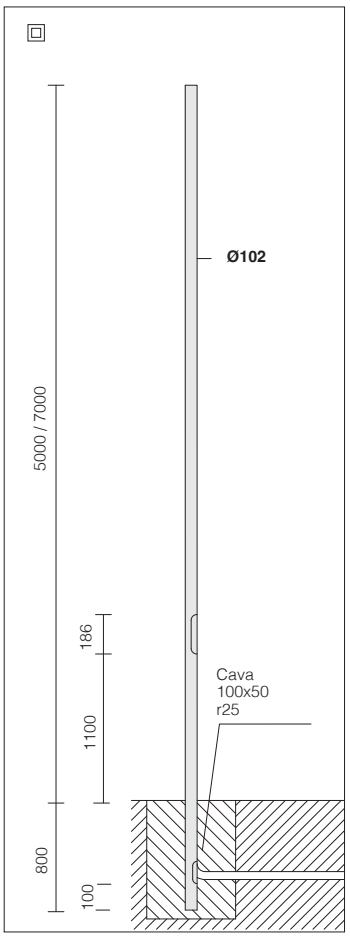

ON REQUEST

Possibility of supplyng poles with the following colour paint finishes: RAL 3001, 5011, 7026, 9011, 8015, 5005, 7024, 7016, 7022, 7037, 6024, 8019, 6011, 1015, 9003, 1021. 6011, 1015, 9003, 1021.

Inspection door with easily removable terminal board for quick connection.

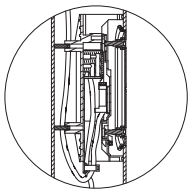

Concrete base dimensions (subject to soil variations)

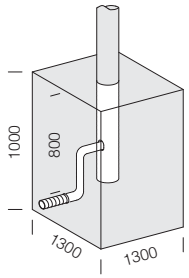



acc. 1487 steel pole to be buried

colour	code							Ø	Ø
RAL 9006	425060-00	5800	5000	800	1100	186	45	**Ø 102**	Ø 102
graphite	425064-00	5800	5000	800					
RAL 9006	425065-2118	7800	7000	800					
graphite	425065-00	7800	7000	800					

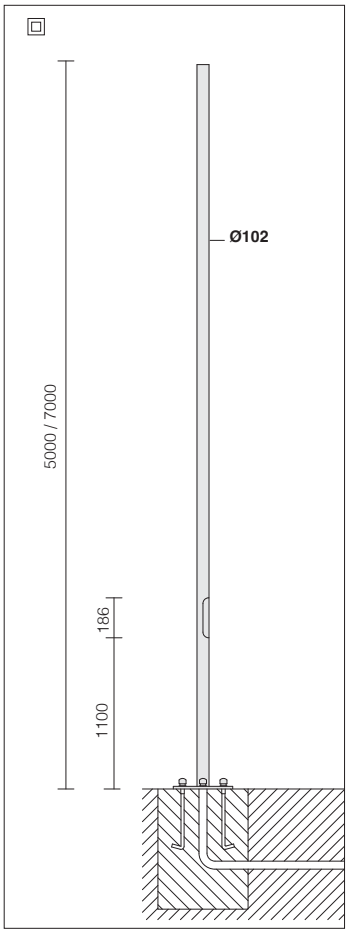

ON REQUEST

Possibility of supplyng poles with the following colour paint finishes: RAL 3001, 5011, 7026, 9011, 8015, 5005, 7024, 7016, 7022, 7037, 6024, 8019, 6011, 1015, 9003, 1021. 6011, 1015, 9003, 1021.

Inspection door with easily removable terminal board for quick connection.

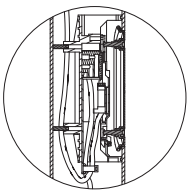

For correct installation of pole and base, the ceiling cap should be fitted as shown in the assembly drawing featured opposite.

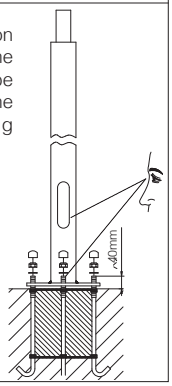

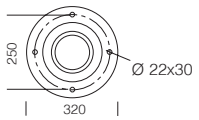

Concrete base dimensions (subject to soil variations)

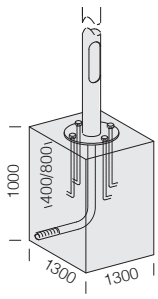

acc. 1485 steel pole with base

colour	code					Ø	Ø	
RAL 9006	425070-00	5000	1100	186	45	**Ø 102**	Ø 102	Ø 320 hole Ø 22x30
graphite	425074-00	5000						
graphite	425075-00	7000						

Log bolts are to be bought separately acc. 299.

Steel pole Ø 102 -159

Steel pole ø 102-159. With die-cast aluminium inspection window (186x45mm), complete with 2 protection fuse holders, 2 fuses, 16A, removable 4-pole terminal block. With hole for insertion of power supply cable. For the version with base, 4 log bolts to be sunk into the ground, bolts and lids have to be purchased.

NOTE. Before selecting the appropriate pole, make all necessary wind pressure resistance tests, pursuant to the Standards or Legislative Decrees in force in the countries where the pole will be mounted and based on the assumed loads specified in Standard EN 40-3-1

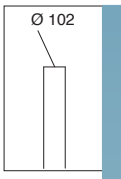



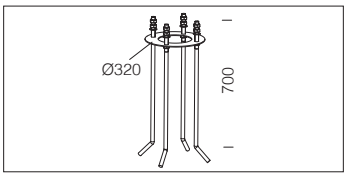

acc. 299 log bolts
991314-00
Log bolts are to be always used with the pole 1417.

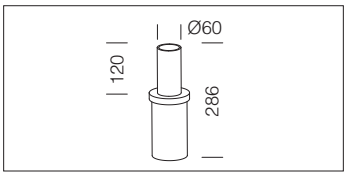

acc. 528 mast-top connection	
graphite	991463-00
grey	991463-2118
In galvanised steel. To be used as a mast-top connection	

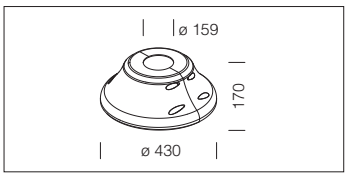

acc. 223 base pole cover	
grey	991333-00
graphite	991320-00
To be used as base pole cover acc. 1417/1418.	

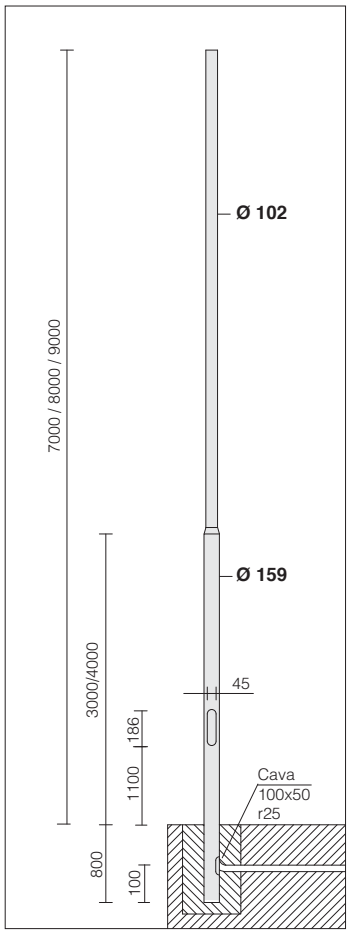

ON REQUEST

Possibility of supplyng poles with the following colour paint finishes: RAL 3001, 5011, 7026, 9011, 8015, 5005, 7024, 7016, 7022, 7037, 6024, 8019, 6011, 1015, 9003, 1021. 6011, 1015, 9003, 1021.

Inspection door with easily removable terminal board for quick connection.

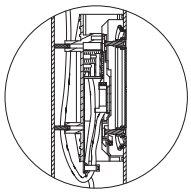

Concrete base dimensions (subject to soil variations)

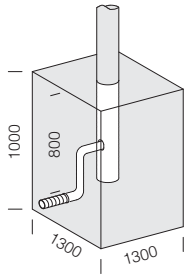

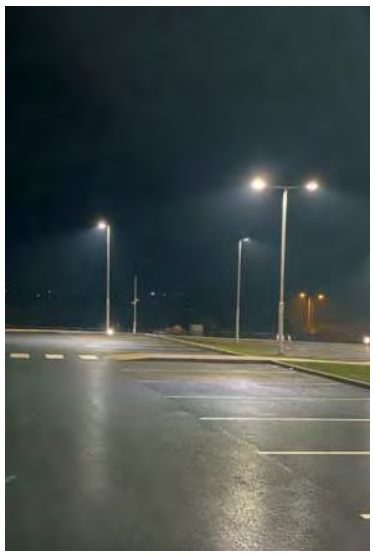

acc. 1418 steel pole to be buried

colour	code							Ø	Ø
RAL 9006	426770-00	7800	7000	800	1100	186	45	**Ø 159**	Ø 102
graphite	426771-00	7800	7000	800	1100				
RAL 9006	426772-00	8800	8000	800	1100				
graphite	426773-00	8800	8000	800	1100				
RAL 9006	426774-00	9800	9000	800	1100				
graphite	426775-00	9800	9000	800	1100				

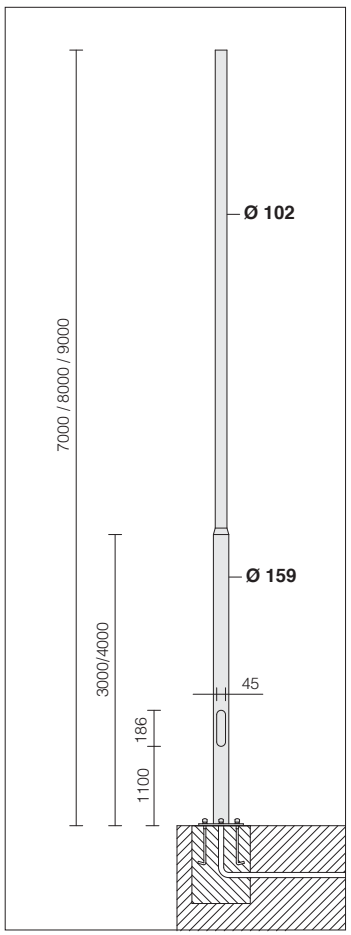

ON REQUEST

Possibility of supplyng poles with the following colour paint finishes: RAL 3001, 5011, 7026, 9011, 8015, 5005, 7024, 7016, 7022, 7037, 6024, 8019, 6011, 1015, 9003, 1021. 6011, 1015, 9003, 1021.

Inspection door with easily removable terminal board for quick connection.

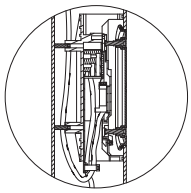

For correct installation of pole and base, the ceiling cap should be fitted as shown in the assembly drawing featured opposite.

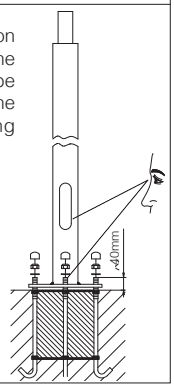

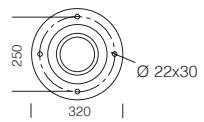

Concrete base dimensions (subject to soil variations)

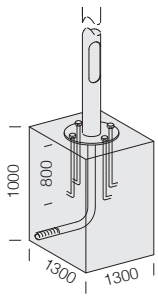

acc. 1417 steel pole with base

colour	code					Ø	Ø	
RAL 9006	426760-00	7000	1100	186	45	**Ø 159**	Ø 102	Ø 320 hole Ø 22x30
graphite	426761-00	7000	1100					
RAL 9006	426762-00	8000	1100					
graphite	426763-00	8000	1100					
RAL 9006	426764-00	9000	1100					
graphite	426765-00	9000	1100					

Log bolts are to be bought separately acc. 299.

Steel pole Ø 120 -159

Hot-dip galvanised steel poles.
With die-cast inspection window (186x45mm), 2 protection fuse holders, 2 fuses, 16A, 4-pole/3-way removable terminal block = 10 sqmm, 2,5 sqmm connection. With hole for insertion of power supply cable. For the version with base, 4 log bolts to be sunk into the ground, bolts and lids have to be purchased. Standard insulation class II.
When using Insulation Class I fixtures, appropriate grounding connections should be included in the system.

NOTE. Before selecting the appropriate pole, make all necessary wind pressure resistance tests, pursuant to the Standards or Legislative Decrees in force in the countries where the pole will be mounted and based on the assumed loads specified in Standard EN 40-3-1

acc. 211



acc. 300
+ acc. 368

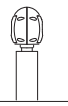

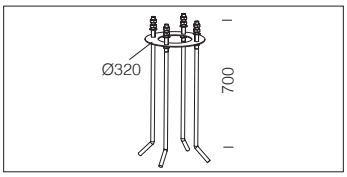

acc. 299 log bolts
991314-00
Log bolts are to be always bought with the pole 1415.

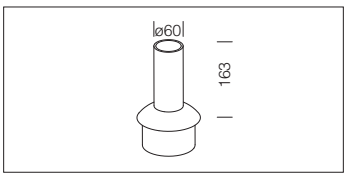

acc. 368 mast-top-pole connec.	
grey	427002-00
graphite	427003-00
In galvanized steel. To be used as a mast-top-pole connection on poles acc. 1415/1416.	

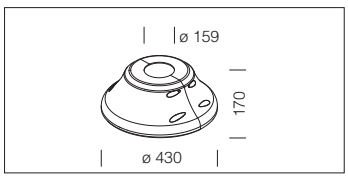

acc. 223 base pole cover	
grey	991333-00
graphite	991320-00
To be used as base pole cover acc. 1415/1416.	



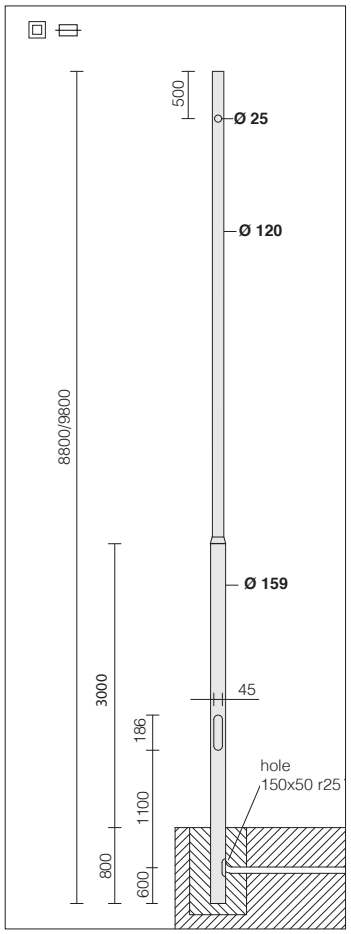

ON REQUEST

Possibility of supplyng poles with the following colour paint finishes: RAL 3001, 5011, 7026, 9011, 8015, 5005, 7024, 7016, 7022, 7037, 6024, 8019, 6011, 1015, 9003, 1021. 6011, 1015, 9003, 1021.

Inspection door with easily removable terminal board for quick connection.

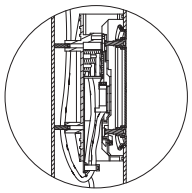

Concrete base dimensions (subject to soil variations)

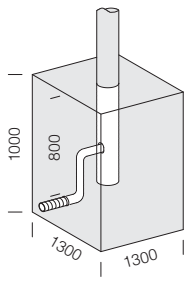



acc. 1416 steel pole to be buried

colour	code								
RAL 9006	426750-00	8800	8000	800	1100	186	45	**Ø 159**	Ø 121
graphite	426751-00	8800	8000	800					
RAL 9006	426752-00	9800	9000	800					
graphite	426753-00	9800	9000	800					

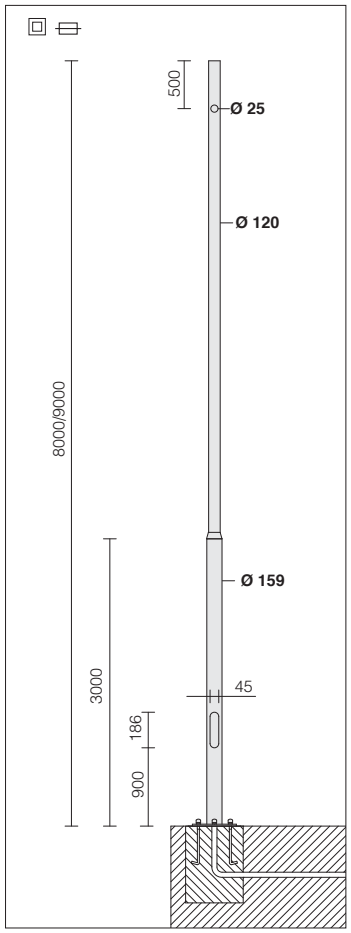

ON REQUEST

Possibility of supplyng poles with the following colour paint finishes: RAL 3001, 5011, 7026, 9011, 8015, 5005, 7024, 7016, 7022, 7037, 6024, 8019, 6011, 1015, 9003, 1021. 6011, 1015, 9003, 1021.

Inspection door with easily removable terminal board for quick connection.

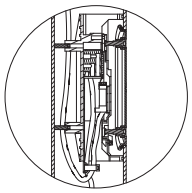

For correct installation of pole and base, the ceiling cap should be fitted as shown in the assembly drawing featured opposite

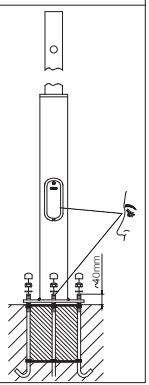

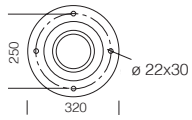

Concrete base dimensions (subject to soil variations)

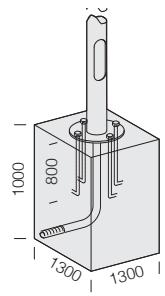

acc. 1415 steel pole with base

colour	code							
RAL 9006	426740-00	8000	1100	186	45	**Ø 159**	Ø 121	Ø 320 hole Ø 22x30
graphite	426741-00	8000						
RAL 9006	426742-00	9000						
graphite	426743-00	9000						

Log bolts are to be bought separately acc. 299.

Hot-dip galvanised steel poles. With die-cast inspection window (186x45mm), 2 protection fuse holders, 2 fuses, 16A, 4-pole/3-way=10mm², derivation 2,5 sqmm, removable terminal block = 6 sqmm, 4 sqmm connection. With hole for insertion of power supply cable; with holes at different heights according to use. For the version with base, 4 log bolts to be sunk into the ground, bolts and lids have to be purchased. Standard insulation class II. When using Insulation Class I fixtures, appropriate grounding connections should be included in the system.

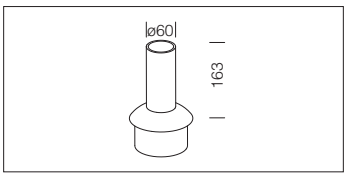

368 mast-top-pole connec.	
grey	427002-00
graphite	427003-00
In galvanized steel. To be used as a mast-top-pole connection on poles acc. 1491/1493 ø120.	

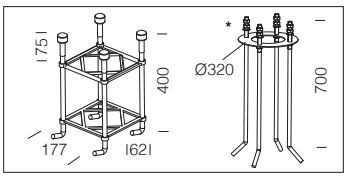

acc. 299 log bolts	
h=6000	991396-00
h=7000/8000	* 991314-00
Log bolts are to be always used with the pole 1493.	

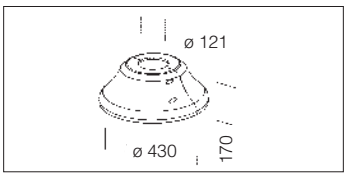

acc. 222 base pole cover	
grey	991378-00
graphite	991381-00
In die-cast aluminium. To be used as a base pole cover acc. 1493.	

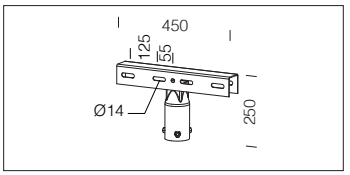

acc. 59 pole bracket	
galvanized	997900-00
Bracket for pole mounting 1 or 2 end-to-end floodlights. For Ø 60/76 mm poles.	

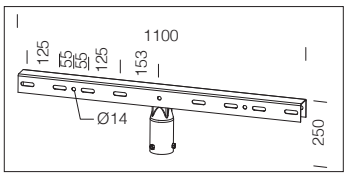

acc. 60 pole bracket	
galvanized	997901-00
Bracket for pole mounting 2 or 4 end-to-end exterior floodlights. For Ø 60/76 mm poles.	

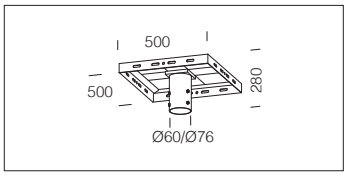

acc. 164 pole bracket	
galvanized	998097
Made in galvanized steel. To be used to apply on a pole until 4 fixture Ø 60/76 mm.	

NOTE. Before selecting the appropriate pole, make all necessary wind pressure resistance tests, pursuant to the Standards or Legislative Decrees in force in the countries where the pole will be mounted and based on the assumed loads specified in Standard EN 40-3-1

acc. 211

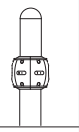

acc. 300
+ acc. 368

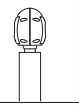

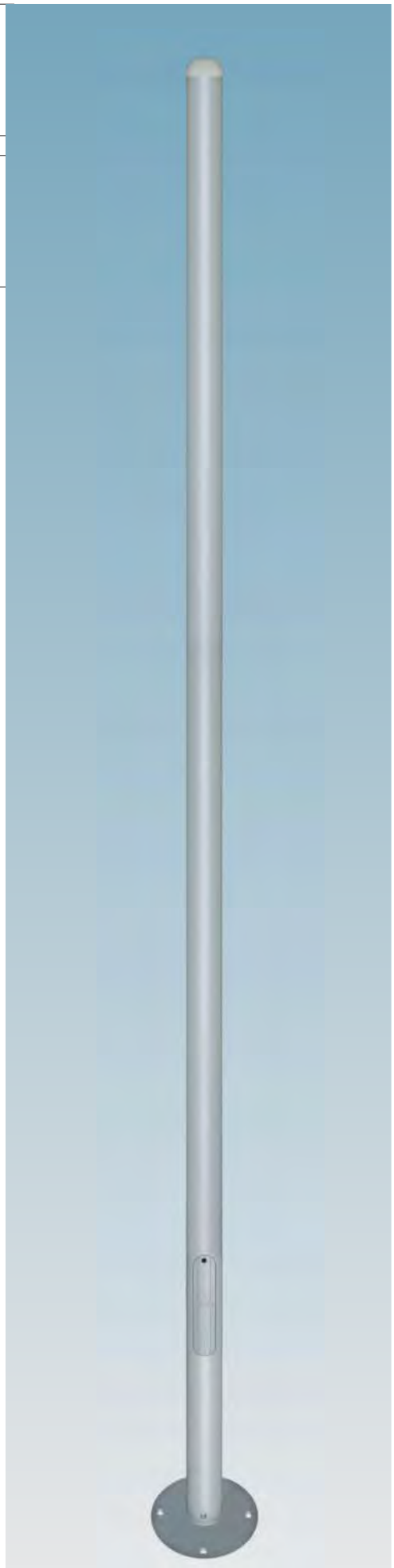

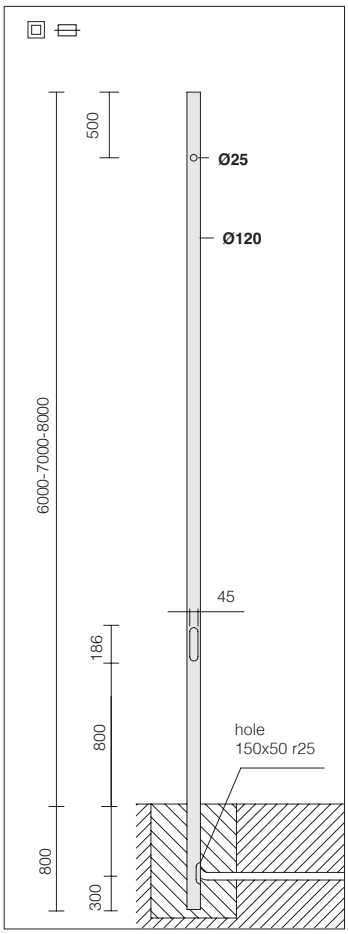

ON REQUEST

Possibility of supplyng poles with the following colour paint finishes: RAL 3001, 5011, 7026, 9011, 8015, 5005, 7024, 7016, 7022, 7037, 6024, 8019, 6011, 1015, 9003, 1021. 6011, 1015, 9003, 1021.

Inspection door with easily removable terminal board for quick connection.

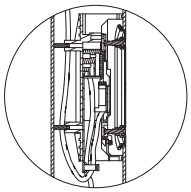

Concrete base dimensions (subject to soil variations)

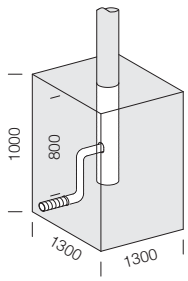



acc. 1491 steel pole to be buried

colour	code							Ø
RAL 9006	426177-00	6800	6000	800	800	186	45	**Ø 120**
RAL 9006	426178-00	7800	7000					
RAL 9006	426179-00	8800	8000					
graphite	426149-00	6800	6000					
graphite	426153-00	7800	7000					
graphite	426159-00	8800	8000					

Supplied with end cap and holes to let the cables through.

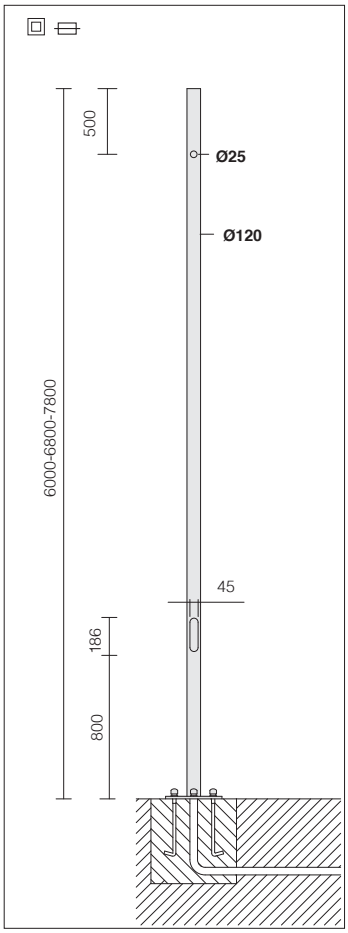

ON REQUEST

Possibility of supplyng poles with the following colour paint finishes: RAL 3001, 5011, 7026, 9011, 8015, 5005, 7024, 7016, 7022, 7037, 6024, 8019, 6011, 1015, 9003, 1021. 6011, 1015, 9003, 1021.

Inspection door with easily removable terminal board for quick connection.

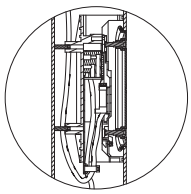

For correct installation of pole and base, the ceiling cap should be fitted as shown in the assembly drawing featured opposite.

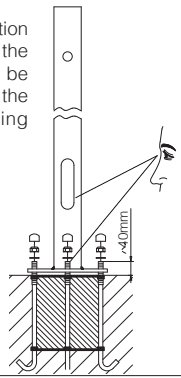

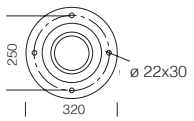

Concrete base dimensions (subject to soil variations)

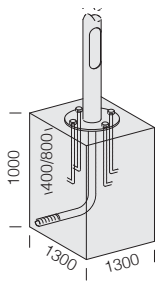

acc. 1493 steel pole with base

colour	code					Ø	
RAL 9006	426197-00	6000	800	186	45	**Ø 120**	Ø 320 hole Ø 22x30
RAL 9006	426198-00	6800					
RAL 9006	426199-00	7800					
graphite	426187-00	6000					
graphite	426188-00	6800					
graphite	426189-00	7800					

Supplied with end cap and holes to let the cables through. **Log bolts are to be bought separately acc. 299.**


Caffè

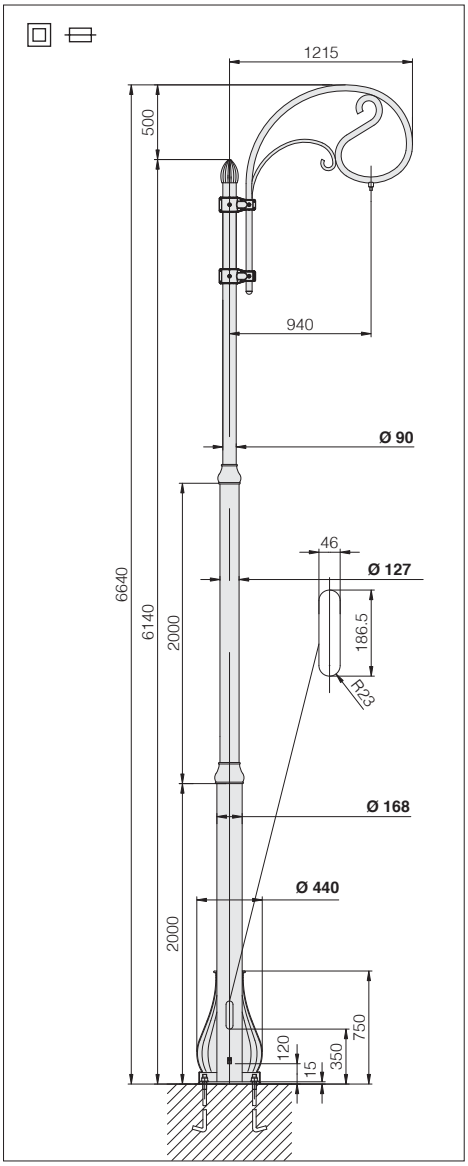

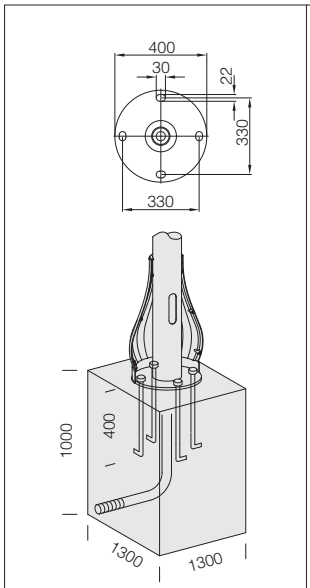

Cement base dimensions (subject to soil variations) for underground sinking of the 4 log bolts of acc. 1498.

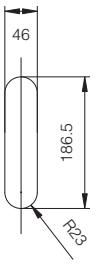

Inspection window with easily removable terminal block for quick connection.

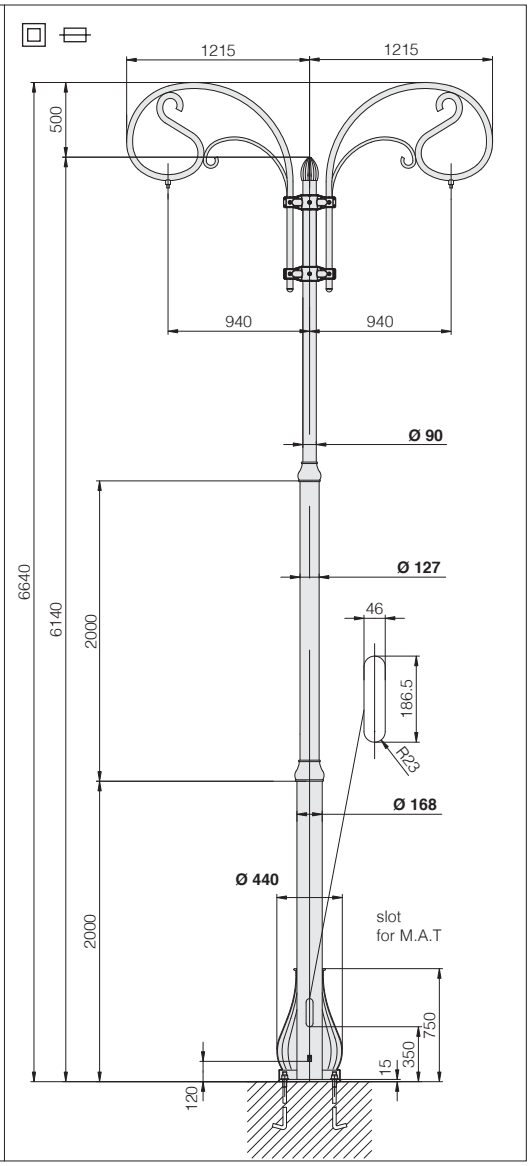

acc. 297 log bolts
426448-00
Log bolts are always to be used with the pole 1498.

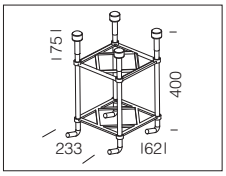

acc. 1498 Liberty pole

version	colour	code					Ø	Ø	
with 1 arm	graphite	425200-00	6140	350	186.5	46	**Ø 440**	Ø 90	Ø 400 hole 30x22
with 2 arms	graphite	425202-00							

Log bolts are to be bought separately acc. 297.

Liberty Pole, complete with one or two brackets. Internal steel pole with die-cast aluminium coating.
Die-cast aluminium inspection window. Complete with 2 protection fuse holders, 2 fuses, 16A, removable 4-pole terminal block, 16sqmm cross section.

NOTE: The possibility to attach an assembly to the pole is subject to a wind pressure resistance assessment in the areas regulated by CNR-UNI standard 10032-67, according to load assumptions in UNI UNI 40/6 standard. An accurate and suitable protection or insulation of the surfaces involved is recommended to avoid any direct contact with the new masonry or concrete screed.

CAMPANA

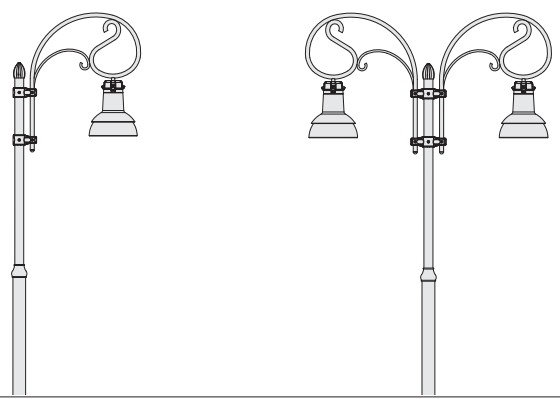

Virgola pole

Tapered steel lighting pole. With hole for insertion of power supply cable, pole-head connection, ø60.
For the version with base, 4 log bolts to be sunk into the ground, bolts and lids have to be purchased.
When using insulation Class I fixtures, appropriate grounding connections should be included in the system.

NOTE. Before selecting the appropriate pole, make all necessary wind pressure resistance tests, pursuant to the Standards or Legislative Decrees in force in the countries where the pole will be mounted and based on the assumed loads specified in Standard EN 40-3-1

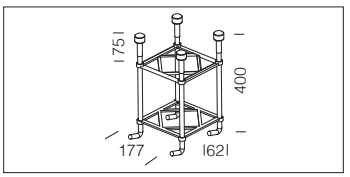

acc. 299 log bolts	
	991396-00
Log bolts are to be always used with the pole 1490.	



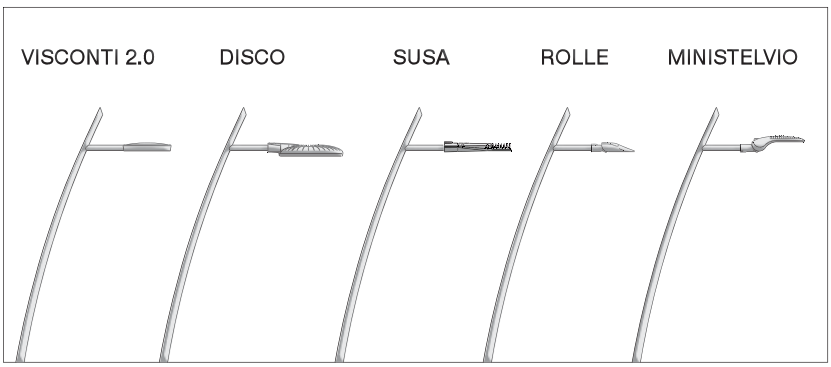



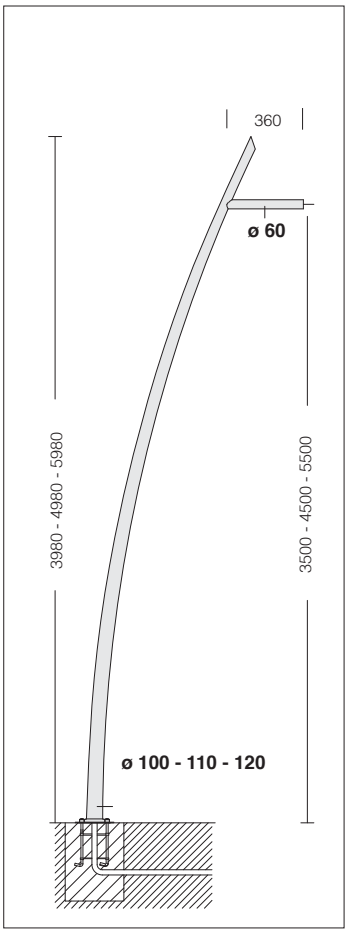

Cement base dimensions
(subject to soil variations)

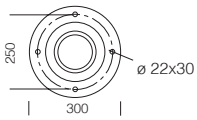

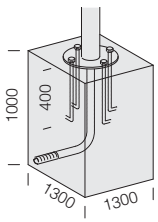





acc. 1490 "Virgola" pole

colour	code			Ø	Ø	
RAL 9006	425080-00	3980	3500	**Ø 100**	Ø 60	Ø 300 hole Ø 22x30
RAL 9006	425081-00	4980	4500	**Ø 110**		
RAL 9006	425082-00	5980	5500	**Ø 120**		

Painted pole in galvanized steel. Complete with cap and cable insertion hole. **Log bolts are to be bought separately acc. 299. On request pole to be buried**

For poles: Fluted Ø120, Steel Ø120, Steel Ø120-152, Steel Ø120-193



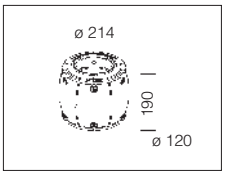

acc. 211 Sector connector	
grey	426952-00
graphite	426953-00
In aluminium. To be used for pole mounting ø 120.	



Acc. 327/328
Disco
Volo
Visconti 2.0
Torpedo 2.0

Ø 120



Acc. 303
Torcia
Vista

Acc. 301



Acc. 210
Disco
Volo
Visconti 2.0
Torpedo 2.0

Ø 120

Acc. 304
Campana
Visconti 2.0

Ø 120

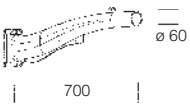

acc. 210 Sector arm	
grey	426950-00
graphite	426951-00
Made of aluminium. To be used with acc. 211 for pole mounting.	

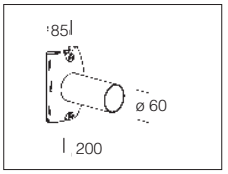

acc. 327 arm	
grey	426942-00
graphite	426943-00
Made of die-cast aluminium. To be used with acc. 211-300 for installation of Monza, Volo.	

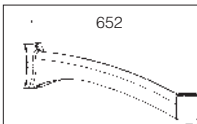

acc. 301 arm Oliva	
grey	426972-00
graphite	426973-00
Made of aluminium. To be used with acc. 300-303-304 for pole mounting or acc. 302/309 for wall mounting.	

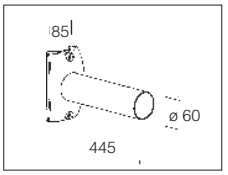

acc. 328 arm	
grey	426944-00
graphite	426945-00
Made of die-cast aluminium. To be used with acc. 211-300 for installation of Monza, Volo.	

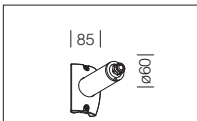

acc. 381 short arm	
grey	326503-00
To be used with acc. 211-300 for pole mounting.	

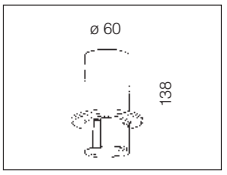

acc. 303 connection ø 60	
grey	426976-00
graphite	426977-00
Made of aluminium. To be always used with acc. 301 for pole arm installation of Torcia, Vista, Polar, Clima.	

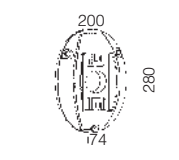

acc. 302 wall mounting	
grey	426974-00
graphite	426975-00
Made of aluminium To be installed with acc.210/327/328 on the wall arm.	

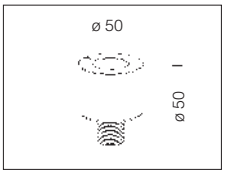

acc. 304 threaded connection	
galvan.	426978-00
Threaded connection to be used with acc. 301 for wall or pole installation of Campana, Visconti 2.0.	

For poles: Fluted Ø120, Cone-Shaped, Steel Ø120, Steel Ø120-152, Steel Ø120-193

acc. 300 Oliva connector	
grey	426970-00
graphite	426971-00
Made of aluminium. To be installed on ø60.	

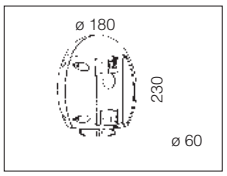













acc. 212 ring	
grey	426954-00
graphite	426955-00
In aluminium. To be used with acc. 214/215 for pole mounting ø 120.	

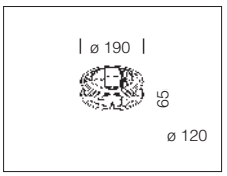

acc. 213 long banner connec.	
grey	426956-00
graphite	426957-00
In aluminium. To be used for pole mounting ø 120 of a flag.	

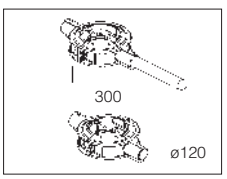

acc. 215 finishing tie rod	
	426960-00
In steel. To be used with acc. 212.	

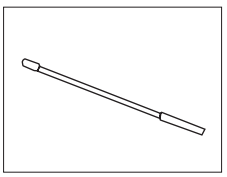

acc. 214 small banner connec.	
grey	426958-00
graphite	426959-00
In aluminium. To be used with acc. 212 for pole mounting.	

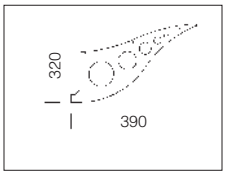

acc. 305 end cap	
grey	426979-00
graphite	426980-00
To be used when on the acc. 210 no fixtures are installed. For an aesthetic finish.	

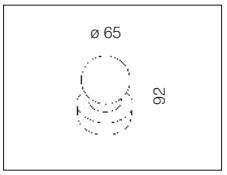

Upon request:













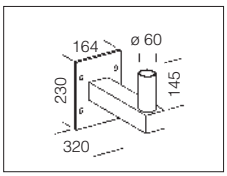

acc. 72 wall bracket	
RAL 7021	997910-00
Tropicalised steel, with mounting plate. For wall mounting.	

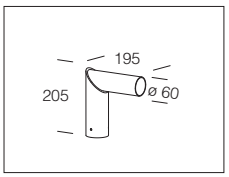

acc. 205 mast-top mounting	
RAL 9006	426941-00
In galvanized and painted steel. To be used for mast-top installation on Ø60 pole. 90° fixed.	

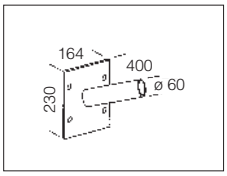

acc. 48 wall bracket	
RAL 9006	997706-00
In steel. Used for wall mounting. Connection Ø60. Angle 15°.	

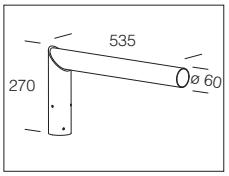

acc. 205 mast-top mounting	
RAL 9006	426948-00
In galvanized and painted steel. To be used for mast-top installation on Ø60 pole. 90° fixed.	

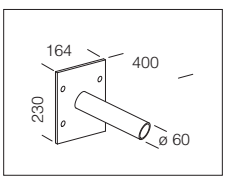

248 wall bracket		
RAL 9006	Ø40	997804-00
	Ø60	997708-00
In steel. For wall mounting. Connection Ø40-60.		

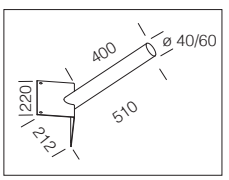

249 corner bracket		
RAL 9006	Ø40	997805-00
	Ø60	997803-00
In steel. For wall corner mounting. Connection Ø40-60.		

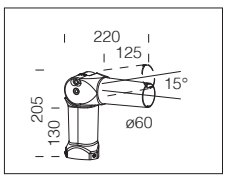

405 articulated connection	
RAL 9006	991385-00
Adjustable connection at 90°. be used for pole installation Ø60.	

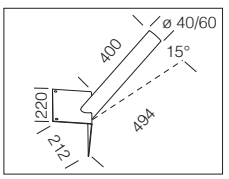

acc. 49 corner bracket		
RAL 9006	Ø40	997707-00
	Ø60	997802-00
In steel. For wall corner mounting. Connection Ø40-60. Angle 15°.		

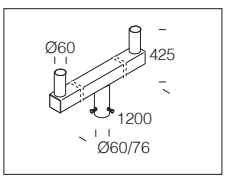

acc. 74 double mounting on mast	
RAL 7021	997911-00
Tropicalised steel. For on-mast installation of two fixtures. Connection Ø60/76.	

UNI EN 40 STANDARD

The UNI standard contains specific prescriptions concerning lighting poles, defined as supports designed to hold one or more lighting fixtures and composed of one or more parts: a stem, an extension, and an arm if required. The regulation applies to pole of a nominal height of 20 m or less, and poles with shelf of a nominal height of 18 m or less. The regulation applies both to straight poles for lighting fixtures with top mast mounting, and poles for fixtures with side mast mounting. The standard specifies the materials to be used in manufacturing poles for public illumination, provides recommendations on corrosion protection treatments, and determines the characteristics of electric gear compartments, cable raceways and grounding terminals of straight poles. Part 3-1 specifies the loads to be considered in designing lighting poles, providing bases for the calculation carried out when designing the illuminant's support structure, represented by the pole. The same part indicates the procedures for the correct measurement of the load due to the wind, as well as all the load variables to be considered. The standard enables a calculation of the action of the wind throughout the entire national territory, divided into nine geographic areas depending on wind intensity. The regulation refers directly to UNI standard ENV 1991-2-4; based on the latter, it provides the speed of the wind to be considered for the relevant installation area. The regulation indicates that the reference speed determines the calculation pressure, which in turn has to be adjusted applying the appropriate coefficients depending on the components' shapes, installation area characteristics, pole physical and geometric characteristics, etc.

TESTING OF THE COMPOSITIONS IN THE SHOWN CATALOGUE - All metal pole assemblies in the "urban decoration" and "residential" lines presented in the catalogue can be tested by Disano in accordance with UNI standard EN 40. Testing for conformity with UNI STANDARD EN 40 can be obtained upon request from our headquarters.
Testing of lighting systems is performed to determine:
- pole's resistance to bending due to wind thrust.
- pole's resistance to twist due to wind thrust on asymmetric assemblies.
- maximum vertical and horizontal warp due to wind thrust and to the assembly's own loads.

For those particular assemblies which are not tested in accordance with UNI standards EN 40/6 no area-related data are provided; however, indications are given on maximum estimated tolerable wind speed (in red) and anchor base dimensioning calculated according to the latter measure.

TEST - The action of the wind causes bending stress on the pole due to the momentum generated by the horizontal thrust force acting upon the elements that make up the lighting system with arms equal to the height of the respective centres of gravity.
Tests have been carried out on the lighting systems to ascertain:
- the resistance of the pole to the compressive stress caused by the weights of all the elements making up the composition;
- the resistance of the pole to the bending stress generated by the thrust stress of the wind;
- the resistance of the pole to the torsion stress generated by the thrust stress of the wind;
- the resistance of the pole to the shear stress at the base due to the con trast exercised by the inertia of the concrete foundation plinth;
- the size of foundation plinth required to ensure stability of the combined compressive and bending stress transmitted to the pole.

The bending test was carried out using the yield point as the maximum stress value. Resistance was ascertained as in UNI EN standard 40/8, at the critical points in the structure that is at the base of the pole and at the lower edge of the inspection window where present. All calculations were carried out according to the definitions described below:
The load system considered included the weight of each lighting fixture and the thrusts caused by the action of the wind.
The weights of each of the main elements making up the compositions studied were taken into consideration, including:
- weight of the pole and of all the accessories;
- weight of the overall lighting fixture or of the reflectors and related bases.

The vertical forces due to these masses were considered as it applied in the respective fields of gravity.
The dynamic pressure for the calculations due to the wind were obtained by multiplying the basic dynamic pressure, set down by the regulations as 50ON/sq mm, by various factors which take account of the variation in the height above ground level, of the nominal height of the pole, of its dynamic behaviour when there are gusts of wind, of the location where it is installed. The basic dynamic pressure refers to a height of 10 m above ground level. Variation in the height above ground level has been assumed to be half the nominal height of the pole, considering the fact that, in general, poles for urban decor are installed at ground level. If they are installed at a different level, specific tests must be carried out. The dynamic increase coefficient, defined by UNI EN standard 40/6 takes account of the increase in loads when there are oscillations caused by gusts of wind. Coefficients which take into account the shape of the lighting fixture and of the pole have been calculated for each type and height.

SIZING OF THE FOUNDATION PLINTH

In calculating the correct size for the foundation plinth, reference is made to low quality concrete with low resistance since this permits a wide margin of safely. The depth used in the calculations, at which the pole should be buried in the concrete, is given in the catalogue and varies according to the type of pole used in the composition; the depth of the plinth is increased by 10 cm over that measurement to avoid punching and sinking of the pole within the concrete. The base chosen is square shaped to ensure the same response to the action of the wind from whatever direction it blows. In the case of fluted poles with base (acc. 1408 - 1508) which do not need to be buried in a foundation plinth, but are connected to it by log bolts, it is assumed that the log bolts to be buried in the concrete of which the foundation plinth is made are suitably sized to withstand the stress conditions generated by the load assumptions. The stability of the foundation plinth also depends upon the type of ground on which it is laid; the tests were carried out with a ground resistance value of 1.5 kg/sq cm, corresponding to medium to low resistance ground. With these conditions, a check of the force required to overturn the lighting fixture-plinth system was carried out, considering the plinth as simply standing on the ground. The system is subject to the moment generated by the horizontal thrust stresses acting on the elements that make up the lighting system with arms equal to the distance of the respective centres of gravity from the deepest point of the plinth. Stability against overturn is ensured by the weight of the lighting fixture, by the correct size of the concrete plinth and by the resistance offered by the ground. These calculations have permitted the identification of the minimum size of plinth required to prevent overturning, sliding or sinking.

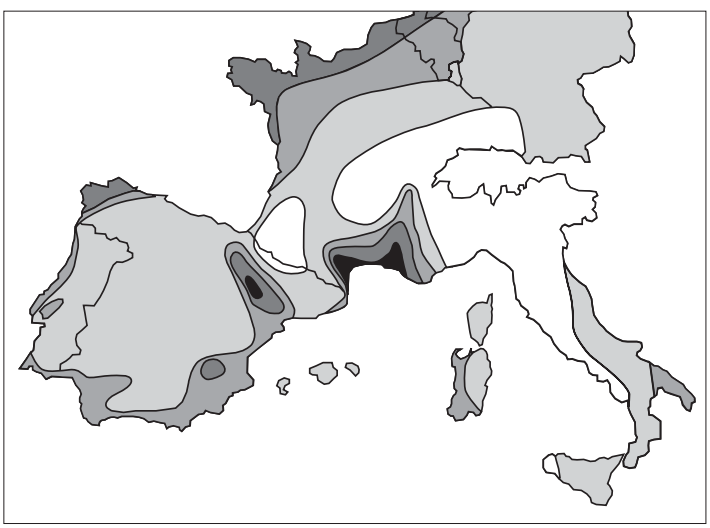

Example of application of a fluted pole of type acc. 1491/1495 (**1**) and 1493/1496 (**2**). The plinth's size depends on the type of pole, the composition, the terrain on which it stands and the material.

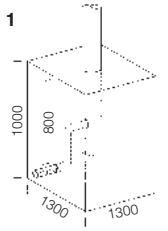

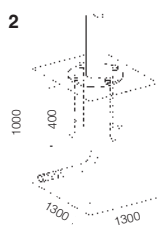

Example of application of a fluted pole of type acc. (**3**) and 1308/1408/1508 (**4**). The plinth's size depends on the type of pole, the composition, the terrain on which it stands and the material.

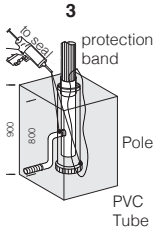

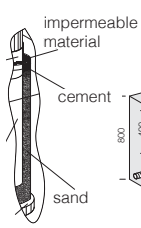

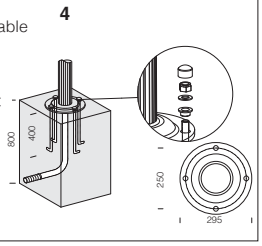

















Whether it's for indoor or outdoor areas, public or private offices, commercial or industrial spaces, Disano offers a **WIDE RANGE OF LIGHTING MANAGEMENT SOLUTIONS** that can help increase energy savings, visual comfort and safety.

Disano illuminazione offers a wide range of solutions that meet the design requirements of both simple and complex installations which include the concepts of **Smart Building** and **Smart City**, as well as **IoT infrastructure** where data are monitored and the system is analyzed to increase energy savings through personalized control strategies, which can be reconfigured endlessly to enable our lighting fixtures to interface with Building Automation IoT systems. Simple access and usage are crucial for making the technology available to everyone through smartphones and tablets.

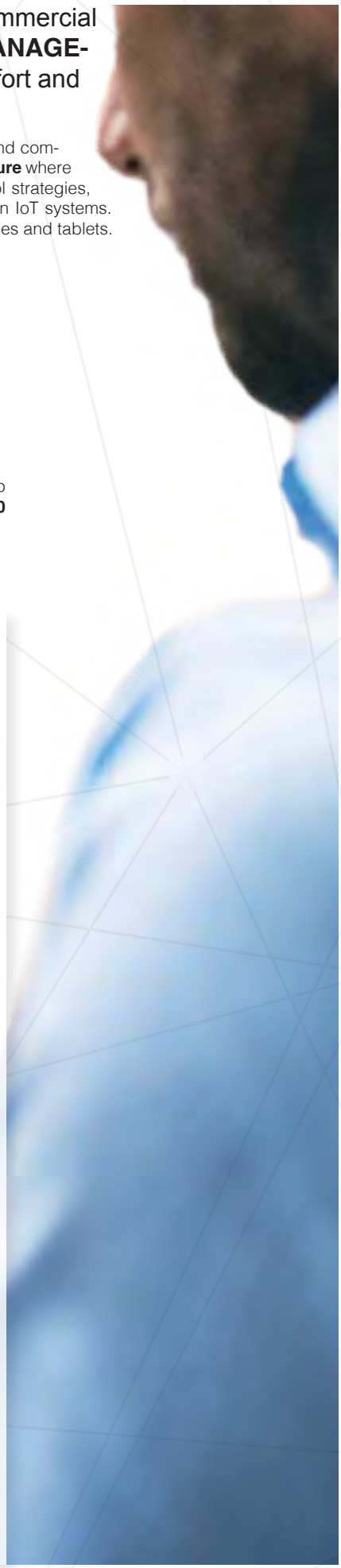

DISMART 2.0 WIRELESS SYSTEM:
SIMPLE, RELIABLE AND INTUITIVE

Disano presents **DISMART 2.0**, a wireless lighting control system that can be managed through a free app available to download from all app stores. Thanks to its straightforward, user-friendly app, **DISMART 2.0** requires no qualified personnel for setup, optimising energy savings and enhancing visual comfort.

What are you waiting for? **Discover our app now**

CONNECTED AND READY FOR USE IN 3 SIMPLE STEPS

DOWNLOAD:
download the free version of the iOS/Andorid app





SET UP:
connect to the gateway of your mobile phone/tablet, then add lamps/sensors/buttons (via QR code)



MANAGE:
you can create groups and set up control for the lights in each room.



DISMART 2.0 App - The main functions allow you to:

- configure the gateway via Wi-Fi network
- manage luminaires individually or in groups
- define different illuminance levels
- define different time slots to divide the day/week/month/year
- independently associate illuminance levels to each time zone
- associate motion sensors or constant light to the groups created
- set an illuminance level (forcing) via N.O. button







INDOOR LIGHTING SOLUTIONS



ELEMENTARY SOLUTION

PLUG & PLAY systems with on-board sensors:

- Solution with built-in sensors
- Sensors attached to the lighting body and visible
- Programming via app or remote control of sensors or trimmers
- The installer and the user do not require specific skills because the lighting fixture is configured to change lighting levels automatically
- No additional cabling
- No centralized controls
- No programming and commissioning from specialized technicians
- No remote communication

*The Disano products equipped with **integrated motion sensor** (with twilight function) **with microwave technology** must be ordered with **subcode -19**.*

*The Disano products equipped with **integrated stepDIM motion sensor** (with twilight function) **with microwave technology** must be ordered with **subcode -18**.*

*The Disano products equipped with **integrated 0/10V motion sensor** (with twilight function) **with microwave technology** must be ordered with **subcode -1219**.*

*The Disano products equipped with **integrated motion and constant light PIR sensor** must be ordered with **subcode -0061**.*

MEDIUM SOLUTION

CABLED solutions for DALI dimmable fixtures:

- The lighting fixture is equipped with a DALI - DALI PUSH DIM LED driver
- Simple additional cabling and possibility to use a standard NO switch

*The **DALI** versions of Disano's products can be used with the external presence detectors (IR - HF 5.8Ghz) by ordering with **subcode -0041**.*

*The Disano products equipped with **PushDIMM** driver must be ordered with **subcode -0045**. These solutions require simple additional cabling and can be used with standard N.O. switch and apply to the families of products for interiors.*

ADVANCED SOLUTION

High-tech WIRELESS solutions to be managed via app:

- System equipped with smart sensors with high level of automation
- Easy-to-use app and software that do not require skills from specialists (e.g. DALI commissioning or software engineer)
- Built-in or external detectors and, if requested, additional cabling that does not require complex circuitry

*The **basicDIM Wireless,** is the ideal solution to make the lighting more modern without construction work. Disano's products Disano made with the **basicDIM** system can be ordered according to the following compositions:*

*- **COMPOSITION A:** order **DALI** version with **subcode -0041** + **basicDIM wireless** module code **81420072 - 986462-00.***
Users can command the Basic-DIM wireless modules with the 4remote BT app or the user interface to create a wireless communication network.

*- **COMPOSITION B**: order version **with integrated wireless technology subcode -23.***
Users can communicate directly with the fixture with the 4remote BT app or from the user interface.

SMART - IoT SOLUTION

COMPLEX solutions requiring lighting management hardware and software:

SMART solution:
- Wired and wireless solutions
- System with all fixtures and sensors are managed with the BUS link (or over the air) with the possibility of a limited, but extremely simple, management
- Possibility to configure via app/smartphone/tablet
- Suitable for medium-small systems: variable complexity, including situations that may require the intervention of specialized workers (e.g. commissioning)
- Scalable

*The Disano products with **Zhaga Socket** must be ordered with **subcode -0054**.*

IoT solution:
- Device complete with smart technology and hardware infrastructure with software for remote control

***STAND-ALONE SYSTEM:** the system is made up of hardware and software modules. Communication with **DALI** fixtures version with **subcode -0041** and sensors occurs via radio frequency (wireless) solutions.*

***STAND-ALONE SYSTEM:** the system is made up of hardware and software modules. Communication with **DALI** fixtures version with **subcode -0041** and sensors occurs via cables (wired) or radio frequency (wireless) solutions.*

INSTALLATION TIPS *(products equipped with integrated sensor with microwave technology):*

- *Do not install in unstable locations or where subject to vibration*
- *Do not install near metal or glass structures*
- *Do not install near water pipes*
- *Do not install near fluorescent tubes*
- *Follow the instructions for maximum mounting height*
- *Make sure there are no moving or interfering objects within the sensor's range*
- *The sensor's microwaves can pass through glass, windows, doors and walls*

OUTDOOR LIGHTING SOLUTIONS



ELEMENTARY SOLUTION

Programmable luminaires:

The luminaire is equipped with a smart LED driver
• Virtual Midnight: lights can be dimmed in 4 steps (up to 5 steps upon request)
• The lighting fixtures complete with motion sensors will adjust the light flux in the presence of moving people by varying the brightness value according to pre-determined levels based on certain times

*The Disano products equipped with **virtual midnight** must be ordered with **subcode -30**.*

*The Disano products equipped with **motion sensors** must be ordered with **subcode -1219**.*

SMART SOLUTION MEDIUM

COMPLEX solutions requiring lighting management hardware and software:

The lighting fixture is designed to accept NEMA/ZHAGA socket
• Option to install sensors and remote control at a later time by using the fixture's socket
• No additional cabling is required
• External installation of fixture

*The Disano products with **Zhaga Socket** must be ordered with **subcode -0054**.*

*The Disano products with **Nema Socket** must be ordered with **subcode -40**.*

***THE "CONTROL-GROUP PROG" SYSTEM - for DALI-2 street lighting (upon request) -** The CONTROL-GROUP PROG solution allows managing the lighting system through local and autonomous dimming programmes based on the data supplied by motion and light sensors. The CONTROL-GROUP PROG is ideal for automating the lighting of roads, pedestrian routes and cycle lanes, residential neighbourhoods, parks, car parks, road junctions, marinas and much more.*

SMART IoT SOLUTION

COMPLEX solutions requiring lighting management hardware and software:

• Device complete with smart technology and hardware infrastructure with software for remote control

*The fixture can be equipped with a **control system which provides lighting managers with the ability to improve the performance of urban and street lighting** installations while saving costs by lowering energy usage, optimizing operation and reducing CO2 emissions. The system incorporates the latest technologies in power electronics, communications and IoT.*

SPORTING SOLUTION

COMPLEX solutions requiring lighting management hardware and software:

• Small and medium-sized sports facilities
• Large-sized sports facilities (stadiums/sport centres/campuses)

***BASIC WIRELESS:** a wireless control system designed to manage lighting in small to medium-sized, non-professional sports facilities. It enables significant energy savings without requiring additional electrical wiring.*

***ADVANCE WIRELESS:** wireless control system designed to manage lighting in medium to large non-professional sports facilities. Through a virtual touch panel, it is possible to create and activate customised lighting scenarios based on specific needs.*

***DMX TOP SOLUTION:** a lighting control system conceived for large professional arenas that require very high and evenly distributed lighting levels to meet HDTV needs. The system allows adjusting the brightness of lights and creating spectacular lighting effects that produce a strong visual impact on viewers.*

INSTALLATION TIPS *(products equipped with integrated sensor with microwave technology):*

- *Do not install in unstable locations or where subject to vibration*
- *Do not install near metal or glass structures*
- *Do not install near water pipes*
- *Do not install near fluorescent tubes*
- *Follow the instructions for maximum mounting height*
- *Make sure there are no moving or interfering objects within the sensor's range*
- *The sensor's microwaves can pass through glass, windows, doors and walls*

DISMART 2.0: WIRELESS REMOTE CONTROL SYSTEM

DISMART 2.0 system was designed to allow notable energy savings in indoor lighting systems.





DISMART 2.0 - A wireless lighting management system designed for installers and end users, while also supporting designers thanks to its easy integration into lighting installations and compliance with minimum environment criteria (CAMs) for public spaces.

It applies mainly to the following sectors: **INDUSTRIAL, LOGISTICS, INDOOR SPORTS**

To set up a **DISMART 2.0** system, you will need to order the following products:

1) WIRELESS luminaire complete with **light controller** module with **subcode -24**

2) Gateway module with code **81410011** that will generate the Wi-Fi local network

3) DALI2 sensor interface or N.O. buttons in IP65 box with code **81410014**

4) DIMM DALI/DALI2 luminaire with **subcode -0041,** dwhich will be associated to the **DISMART 2.0** interface in IP65 box with code **81410013**

5) Free App for mobile devices for complete system management and parameter configuration

DISMART 2.0 system solutions currently apply to the weatherproof and industrial high-bay families.



MAIN FEATURES

- 100% Made in Italy, featuring the latest generation of electronic components
- wireless management system for luminaires, light and presence sensors, DALI2 type, and N.O. buttons
- mesh radio technology with open BLE 5.0 and Wi-Fi protocols
- system programming through the app, featuring the latest generation software/firmware architecture, available on both Android and iOS platforms (Q1)

HARDWARE AND SOFTWARE ARCHITECTURE

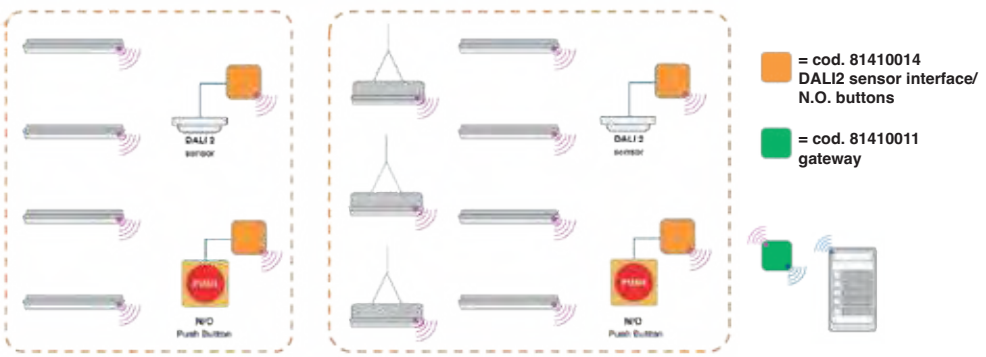

= cod. 81410014 DALI2 sensor interface/ N.O. buttons

= cod. 81410011 gateway

Gateway programming with DISMART 2.0 APP via Wi-Fi (generated by the gateway itself) with mobile devices (phone+tablet)

Mesh radio communication between gateway and lamps/sensors/buttons via BLE 5.0

DALI2 sensors and N.O. buttons of any brand are transformed into *smart wireless things* and join the DISMART 2.0 system adding functionality as well as maximising the system's energy savings

MAIN FUNCTIONS

GROUPS: luminaires can be managed individually or in groups.

BUTTON: an N.O. button can be connected to trigger an event at any time. The physical pushbutton is transformed into a wireless button.

CALENDAR: thanks to the built-in calendar, it is possible to customise daily schedules and manage holidays.

SCHEDULES: thanks to the built-in clock, the system can be programmed for 24-hour time slots.

LIGHT SENSORS: can be integrated and, thanks to the DISMART 2.0 interface, they will be converted into wireless sensors.

PRESENCE/MOTION SENSORS: can be integrated and, thanks to the DISMART 2.0 interface, they will be converted into wireless sensors.

SCALABILITY: can be configured for both small rooms and large facilities.

INDEPENDENT: the system can be used anywhere. No need for local data connection.

DISMART 2.0 SYSTEM COMPOSITION

The system consists of just **3 elements**, making installation and commissioning easy: a **luminaire** with an **integrated light controller module**, the **gateway**, and the **programming App**.



EXAMPLE OF USE

1) Luminaire in the wireless version complete with **DISMART 2.0 light controller** module with **subcode -24**

2) **GATEWAY DISMART 2.0** code **81410011**

3) **DISMART 2.0 App** for mobile devices, to be used for programming the system

ADVANTAGES OF USE:

The system is reliable, safe and simple to programme thanks to its very intuitive app; quick and easy to install, it does not require commissioning by qualified personnel.

The system enables significant energy savings and a reduction in running costs, because it can be controlled independently.

The system ensures optimal visual comfort by allowing the desired illuminance level to be set and adjusting the luminaires based on the amount of daylight flooding the room.

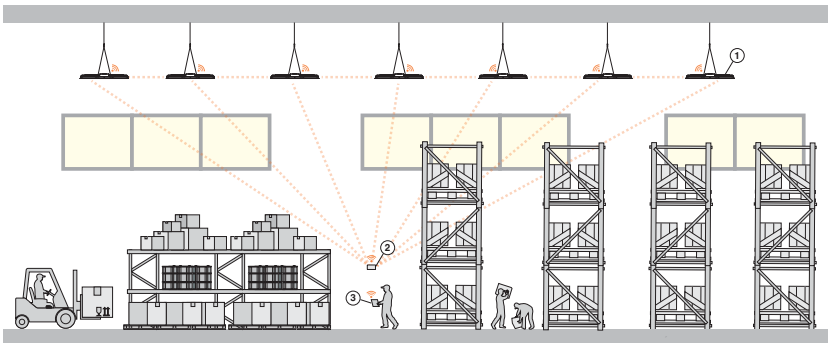

DISMART 2.0 System – Radiofrequency mesh network communication

DISMART 2.0 APP: SIMPLE, RELIABLE AND INTUITIVE, Disano presents the **DISMART 2.0 App**, available for free download from our website, offering complete management of the entire system. Once installed, the gateway creates a Wi-Fi local network that you can connect to using your mobile smart device. Through the **DISMART 2.0 App**, you can then programme the luminaires, sensors, and N.O. buttons integrated into the system.

The software, developed for system management, enables the programming of illuminance levels on an daily/monthly/annual basis, ensuring the desired lighting in the area where the module is installed. Once the simple programming is done, the system works autonomously thanks to the integrated clock. Using an N.O. button panel, the system can trigger an "event" scenario that temporarily overrides the "hourly programming" for a specified duration, as configured via the app.

CONNECTED AND READY FOR USE IN 3 SIMPLE STEPS

1

DOWNLOAD:
download the free version of the iOS/Andorid app

2

SET UP:
connect to the gateway of your mobile phone/ tablet, then add lamps/sensors/buttons (via QR code)

3

MANAGE:
you can create groups and set up control for the lights in each room.



DISMART 2.0 App - The main functions allow you to:

- configure the gateway via Wi-Fi network
- manage luminaires individually or in groups
- define different illuminance levels
- define different time slots to divide the day/week/month/year
- independently associate illuminance levels to each time zone
- associate motion sensors or constant light to the groups created
- set an illuminance level (forcing) via N.O. button

ELEMENTARY SOLUTION (OUTDOOR)

The **virtual midnight (subcode -30)** calculation is based on a mechanism that can be applied to public lights, and more generally to outdoor luminaires, which allow programming a reduction of the luminous flux, when you don't need the luminaire to operate at full power all the time. For example, during the central hours of the night, in areas where vehicle and pedestrian traffic is low, a **reduction of the luminous flux will keep lighting levels within safety standards while saving energy**.



Basic Prog (CLD PROG wiring): luminaires developed to grant great flexibility of use thanks to the possibility to vary luminous flux intensity. When ordering with **subcode -30**, the luminaire will be supplied with a Virtual Midnight device set to factory settings.

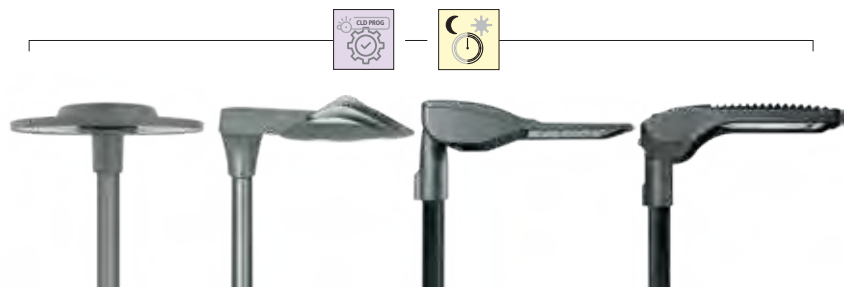

VIRTUAL MIDNIGHT subcode -30 - Stand-alone system with automatic luminous flux reduction in **4 steps**

To increase energy savings at night when there are fewer people and vehicles around, a lighting fixture can be programmed according to a specific profile (customizable on request). The fixture reduces its luminous flux through a self-learning process which, depending on the previous switching on and off times, will determine a hypothetical "virtual midnight". This is the average value between the time the fixture is switched on (sunset) and switched off (sunrise). The "virtual midnight" is the reference point for dimming lights according to the desired profile. The device is integrated in the LED driver and therefore does not require any modification to the system.

In order for the system to function correctly, the system must be adjusted by a device that turns the system on and off on a regular basis every day.

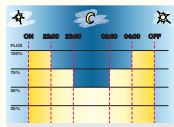

Average annual energy savings: 20%

Factory settings	
Time	Flux
on ÷ 22:00	100%
22:00 ÷ 23:30	75%
23:30 ÷ 02:30	50%
02:30 ÷ 04:00	75%
04:00 ÷ off	100%

Virtual Midnight: fixtures are equipped with a device to reduce flux in **4 steps** based on the calculation of the virtual midnight.

ATTENTION: *original settings and time slots for the "virtual midnight" value can be customized in up to 5 steps upon request.*

Other configuration examples

Virtual midnight GREEN AREAS
subcode -0001

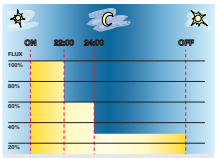

Average annual energy savings: 41%

Settings upon request	
Time	Flux
on ÷ 22:00	100%
22:00 ÷ 24:00	60%
24:00 ÷ off	30%

Ideal for green areas and parks, which are closed to the public at specific hours.

Virtual midnight SAFETY (PRIVATE PROPERTY)
subcode -0002

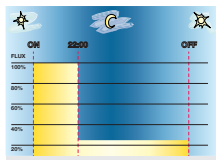

Average annual energy savings: 52%

Settings upon request	
Time	Flux
on ÷ 22:00	100%
22:00 ÷ off	25%

Ideal to maintain safety lights at workplaces, in which people/vehicles are not circulating after work hours.

Virtual midnight PRIVATE PROPERTY AND COMMERCIAL
subcode -0003

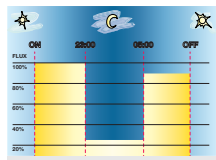

Average annual energy savings: 40%

Settings upon request	
Time	Flux
on ÷ 23:00	100%
23:00 ÷ 05:00	25%
05:00 ÷ off	90%

Ideal for private property and commercial areas after work hours.

Virtual midnight METROPOLI (500.000 population)
subcode -0005

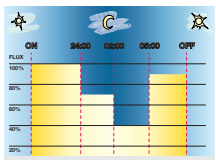

Average annual energy savings: 22%

Settings upon request	
Time	Flux
on ÷ 24:00	100%
24:00 ÷ 02:00	70%
02:00 ÷ 05:00	40%
05:00 ÷ off	90%

Virtual midnight BIG CITY (200.000 population)
subcode -0006

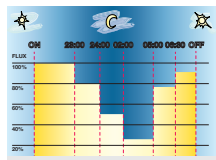

Average annual energy savings: 31%

Settings upon request	
Time	Flux
on ÷ 23:00	100%
23:00 ÷ 24:00	80%
24:00 ÷ 02:00	50%
02:00 ÷ 05:00	30%
05:00 ÷ 06:30	75%
06:30 ÷ off	90%

Virtual midnight CITY (50.000 population)
subcode -0007

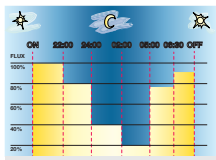

Average annual energy savings: 37%

Settings upon request	
Time	Flux
on ÷ 22:00	100%
22:00 ÷ 24:00	80%
24:00 ÷ 02:00	40%
02:00 ÷ 05:00	20%
05:00 ÷ 06:30	75%
06:30 ÷ off	90%

Virtual midnight TOWN (5.000 population)
subcode -0008

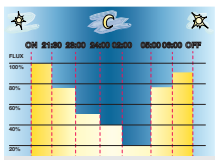

Average annual energy savings: 41%

Settings upon request	
Time	Flux
on ÷ 21:30	100%
21:30 ÷ 23:00	75%
23:00 ÷ 24:00	50%
24:00 ÷ 02:00	40%
02:00 ÷ 05:00	20%
05:00 ÷ 06:00	75%
06:00 ÷ off	90%

Virtual midnight VILLAGE (2.000 population)
subcode -0009

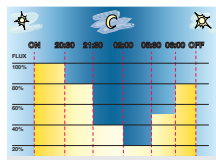

Average annual energy savings: 50%

Settings upon request	
Time	Flux
on ÷ 20:30	100%
20:30 ÷ 21:30	80%
21:30 ÷ 02:00	40%
02:00 ÷ 05:00	20%
05:00 ÷ 06:00	50%
06:00 ÷ off	80%

Virtual midnight HIGH SEASONS
subcode -0010

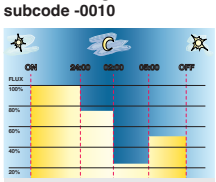

Average annual energy savings: 28%

Settings upon request	
Time	Flux
on ÷ 24:00	100%
24:00 ÷ 02:00	75%
02:00 ÷ 05:00	25%
05:00 ÷ off	50%

Ideal for tourist resorts during peak season periods (sea-summer; mountain-winter).

Virtual midnight LOW SEASONS
subcode -0011

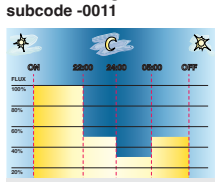

Average annual energy savings: 43%

Settings upon request	
Time	Flux
on ÷ 22:00	100%
22:00 ÷ 24:00	50%
24:00 ÷ 05:00	30%
05:00 ÷ off	50%

Ideal for tourist resorts during low season periods.

Virtual midnight FOUR SEASONS
subcode -0012

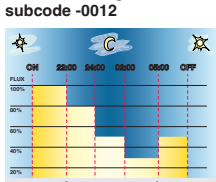

Average annual energy savings: 35%

Settings upon request	
Time	Flux
on ÷ 22:00	100%
22:00 ÷ 24:00	80%
24:00 ÷ 02:00	50%
02:00 ÷ 05:00	30%
05:00 ÷ off	50%

Ideal for tourist resorts that do not need to reschedule their lighting times (compromise between high and low season).

ELEMENTARY SOLUTION (OUTDOOR)

You can make your lighting system **SMART** by integrating sensors into the fixture so that it can detect the movement of people within a given detection area and automatically adjust light intensity according to previously established light levels and delay times. You will also achieve high **energy savings** without affecting the safety and visual comfort of pedestrian



The lighting fixtures with **sub-code -1219 complete with motion sensors** are a functional lighting solution for public spaces. The ability to control the light flux without people moving in a space will let you **optimize operating costs**, while achieving notable **economic savings**. This lighting solution is best suited for public or private streets, cycle lanes, private roads, parks and, in general, for any installation where smart lighting control is required.

RADAR SENSOR

The lighting fixtures complete with motion sensors will adjust the light flux in the presence of moving people by varying the brightness value according to pre-determined levels based on certain times:

1) when there is no motion, the fixtures will keep a certain level of light intensity for a specific period of time
2) when motion is detected in the monitoring area, the luminous flux will dim to 100% of light level
3) if no motion is detected after a certain period of time, the sensor will reset the light level to the pre-set value

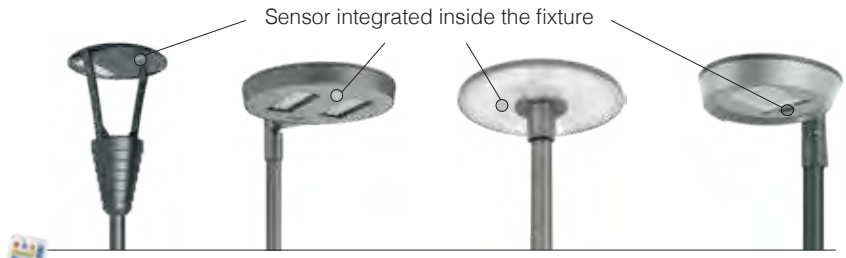

Remote control cod. **81418618** (to be purchased separately) that **allows changing the parameters even after installation is complete** and without the need to directly access the fixture.

DEFAULT SETTINGS

The fixtures is supplied as standard with the following parameters

Detection area	100%
Hold time	5s
Ambient light	OFF
Stand-by time	0s
Stand-by dimming level	10%

NOTE: when placing your order, it is possible upon request a customized configuration that you need to set.

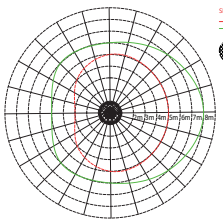

* DETECTION AREA

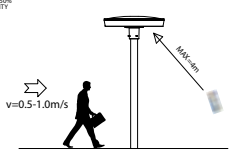

TYPICAL DETECTION AREA AT INSTALLATION HEIGHT 4-6m

*** example of detection area** (varies depending on the available versions). For further information, please contact our customer service.

A) Detection area: the sensor will turn the lights on when it detects motion in this area; with a 100% detection area the sensitivity level is high.

B) Hold time: the period of time during which lights stay on at full brightness after a person or object has left the detection area.

C) Ambient light: when the level of light inside a room is below a predetermined threshold, the sensor will trigger the lights on; when set to 'disable', the sensor will operate whenever it detects movement regardless of the amount of light in the room.

D) Stand-by time: refers to the time the sensor keeps the lights at a dim level after the hold time.

E) Stand-by dimming level: is the lights' dimming level during the stand-by time.

EXAMPLE OF OPERATION

The lighting fixtures with **sub-code -1219** complete with motion sensors will adjust the light flux in the presence of moving people by varying the brightness value according to pre-determined levels based on certain times:

1) when there is no motion, the fixtures will keep a certain level of light intensity for a specific period of time
2) when motion is detected in the monitoring area, the luminous flux will dim to 100% of light level
3) if no motion is detected after a certain period of time, the sensor will reset the light level to the pre-set value

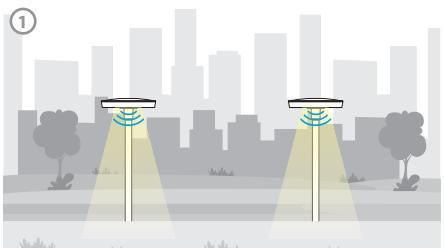

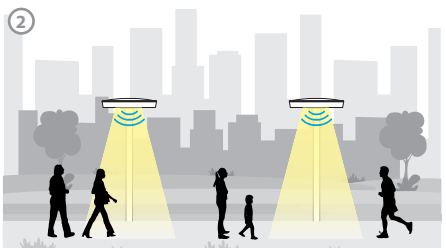

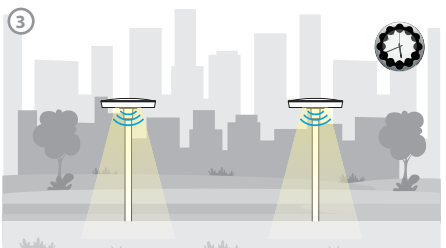

A lighting fixture equipped with a radar-type motion sensor may be affected by wind. Therefore, for particularly windy areas, PIR presence sensors are available upon request and for an additional cost.

SMART MEDIUM SOLUTION (OUTDOOR)

To monitor and manage public lighting centrally, lighting fixtures will always be more equipped with wireless controls that will allow their integration with the IoT. Today the market offers two solutions: **NEMA and ZHAGA**. Both solutions offer an electrical and mechanical connection between the control antenna and the lighting fixture.



Upon request, the **sealing cap can be installed**



Disano's luminaires with **subcode -40** come with the **Nema Socket** to enable the electrical and mechanical connection between the sensor and the light fixture. The socket is made in plastic material and is complete with a gasket to ensure perfect IP protection; moreover, thanks to its removable structure, it can be installed directly onto the luminaire's body (without accessing any internal parts) and **without using tools**, hence facilitating future maintenance; **upon request**, the sealing cap can be installed. The Nema Socket can be adapted to **5/7 poles**: 3 for the electrical connection, and the remaining 2/4 to carry 1/10V or DALI signals; it is also perfectly suited to integrate all "smart" devices for remote lighting control.

Sealing cap supplied **as standard**



Disano's fixtures with **subcode -0054** are compatible with the **Zhaga Socket** that ensures an electric and mechanical connection between the sensor and the luminaire, simplifying the complex architecture of street lighting installations and removing the need for accessory modules and cabling. The **Zhaga Socket** consists of a standard interface between the receptacle on the fixture and its basic components and cover that, together, form the housing of the control module. The built-in low friction seals, that can be coupled together, protect both the fixture and the module. UV-resistant and strong materials complete the features of this reliable connector.

* The Zhaga-D4i mark certifies the fixture's compliance with Zhaga Book 18 version 2 specifications for outdoor luminaires and DiiA's D4i specifications for intra-luminaire DALI interface. This joint certification covers all critical features including mechanical adaptation, digital communication, data reporting and power requirements within a single luminaire, ensuring "plug & play" interoperability of luminaires (drivers) and peripherals, such as connectivity nodes.

EXAMPLE OF FIXTURES WITH ZHAGA OR NEMA SOCKETS



* Fixtures with the Zhaga D4i certification.

ZHAGA SOCKETS CONFIGURATION

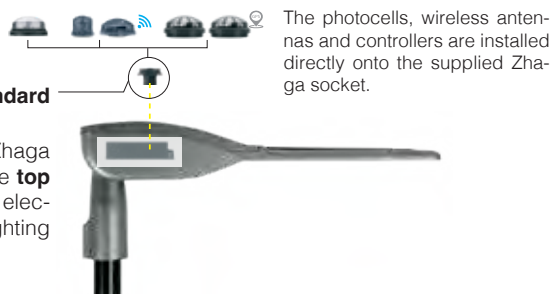

The photocells, wireless antennas and controllers are installed directly onto the supplied Zhaga socket.

Zhaga socket -0054 (standard top configuration)

Fixture designed to accept Zhaga socket, which is found on the **top part of the lighting fixture**, electrically connected to the lighting fixture's driver.

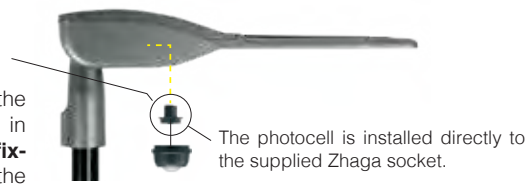

Zhaga socket (bottom configuration - upon request)

Fixture designed to accept the Zhaga socket, which is found in the **lower part of the lighting fixture**, electrically connected to the lighting fixture's driver.

The photocell is installed directly to the supplied Zhaga socket.

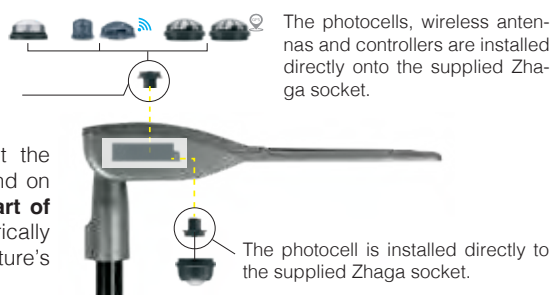

The photocells, wireless antennas and controllers are installed directly onto the supplied Zhaga socket.

Zhaga socket (double configuration - upon request)

Fixture designed to accept the Zhaga socket, which is found on **both the top and lower part of the lighting fixture**, electrically connected to the lighting fixture's driver.

The photocell is installed directly to the supplied Zhaga socket.

SMART MEDIUM SOLUTION (OUTDOOR)

PHOTOCELL AND LIGHTING-MOTION SENSOR - for DALI-2 street lighting

Luminaires compatible with Zhaga receptacles may be equipped with photocells or light/motion sensors. In this way, the luminaire will have the necessary “intelligence” to adjust to specific needs.





cod. 986450-00

PHOTOCELL

Main features:

- Monitoring of ambient lighting for stand-alone or network applications
- Ready for Zhaga receptacles for quick installation to the luminaire
- Precise light measurement from 0.2 to 20,000 Lux
- Detection angle for light measurement: 150° - Start time: ≤ 5 s
- Designed to be installed to the upper side of the luminaire
- Service life up to 100,000 h at a TC of 60 °C

Advantages:

- Innovative: simple start-up for stand-alone applications, Plug & Play interface
- Flexible: luminaire switches on/off depending on ambient light
- Reliable: tested for critical outdoor conditions



cod. 986451-00

MOTION AND LIGHT SENSOR

Main features:

- Monitoring of ambient light and presence detection
- Integrated temperature measurement
- 2 PIR sensors with extended features such as detecting objects with side orientation
- Ready for Zhaga receptacle for quick installation to the luminaire
- Rectangular detection range, ideal for street applications - Start time: 30 s
- Detection angle for light measurement: 76°
- Precise light measurement from 1 to 4,000 Lux
- Integrated pressure equalizing membrane
- Service life up to 100,000 h at a TC of 60 °C

Advantages:

- Innovative: first DALI-2 asymmetric motion sensor based on Zhaga socket
- Flexible: adjustment of parameters with configuration software
- Reliable: tested for critical outdoor conditions

SMART MEDIUM SOLUTION (OUTDOOR)

WIRELESS ANTENNAS WITH REMOTE CONTROL - for DALI-2 street lighting

Thanks to Zhaga compatibility, remote communication modules can now be effectively used for lighting control and data transmission. Each RF node has the necessary “intelligence” to control multiple DALI devices while simultaneously setting up a stable wireless network.





cod. 986445-00



cod. 986446-00

WIRELESS ANTENNAS

Bluetooth Low energy mesh network

Main features:

- Each control unit stores information about its own configuration and the configuration of the rest of the controls installed in the same network.
- Configuration and control can be done from a mobile phone or a tablet using the free CASAMBI APP (available for iOS and Android).
- Remote control of the installation is also possible via cloud through a Casambi router connected to the Internet.
- Electrical connection and mechanical fixing are done through standard ZHAGA Book 18 compatible socket by twisting and locking into place, without tools.
- No need for hubs, master devices, computers or programmes. Communication is via a Bluetooth BLE mesh network.

Operation and configuration:
From the **CASAMBI APP** it is possible to group luminaires by street, set dimming levels according to time, schedule special events for particular days, etc. The communication range between controllers is up to **200m** outdoors. Since devices are operating on a mesh network, controllers communicate with each other until the information reaches the controller for which it was intended, even if it is far away. During setup it is sufficient to be located in the range of one of the controllers.

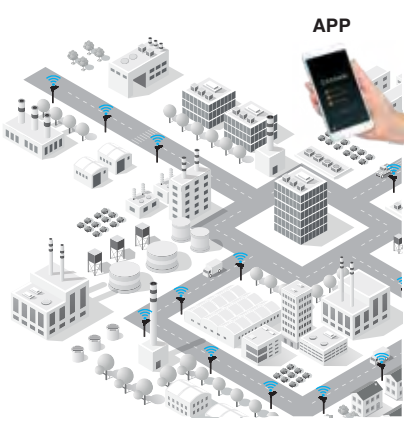

SPORTING SOLUTION

BASIC WIRELESS: a wireless control system designed to manage lighting in small to medium-sized, non-professional sports facilities. It enables significant energy savings without requiring additional electrical wiring.

This solution applies to the following families of product:





System architecture
The system is made up of hardware, software modules and App. The communication with the lighting fixtures occurs via a **wireless controller** (that can control up to 32 DALI drivers) to be installed in an electrical board and that can be easily configured with the **gateway** or via App (iOS-Android).

controller wireless cod. 81420215



BUTTON CONFIGURATION



wireless keyboard cod. 81420221



App

EXAMPLE OF USE

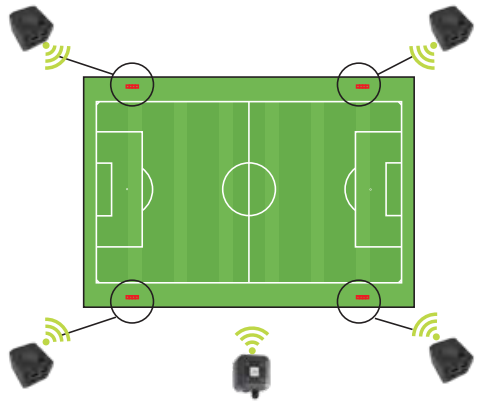

SPORTING SOLUTION

ADVANCE WIRELESS: wireless control system designed to manage lighting in medium to large non-professional sports facilities. Through a virtual touch panel, it is possible to create and activate customised lighting scenarios based on specific needs.

This solution applies to the following families of product:





System architecture
The system is made up of hardware and software modules. The communication with the lighting fixtures occurs via a **wireless controller** (that can control up to 32 DALI drivers) to be installed in an electrical board at the base of the light post and that can be easily configured with a **server** with a wireless interface connected to a **switch** (not included). Lights are managed via a **touch panel**.

EXAMPLE OF USE

CONFIGURATION EXAMPLE

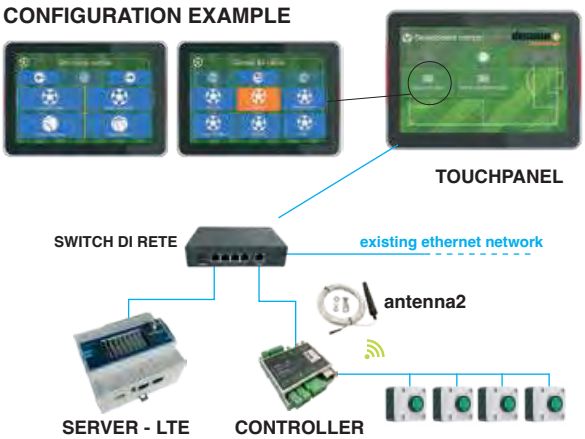

controller wireless cod. 81420215



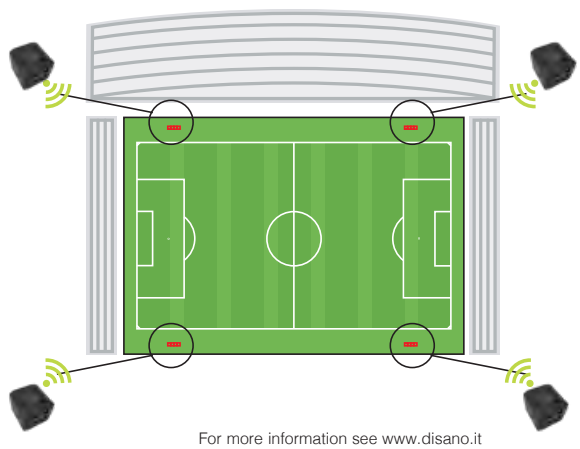

SPORTING SOLUTION

DMX TOP SOLUTION: a lighting control system conceived for large professional arenas that require very high and evenly distributed lighting levels to meet HDTV needs. The system allows adjusting the brightness of lights and creating spectacular lighting effects that produce a strong visual impact on viewers.

Fixtures are equipped with **DMX compatible drivers**. DMX protocol is needed for dynamic light thanks to its immediate reaction time and virtually unlimited number of addresses. DMX can also be used in functional dimming using simple lighting controls in high-end sports installations. DMX allows all range of scenic effects, as well as the monitoring of each luminaire and ease of configuration thanks to the self-addressing DMX-RDM functions.

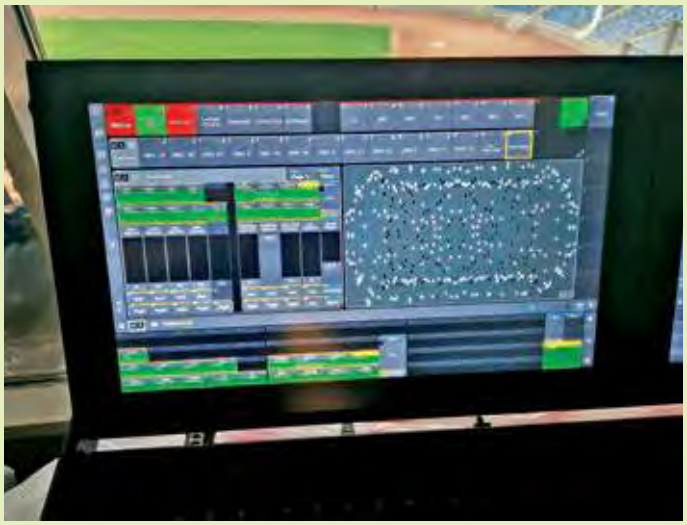







EXAMPLE OF USE

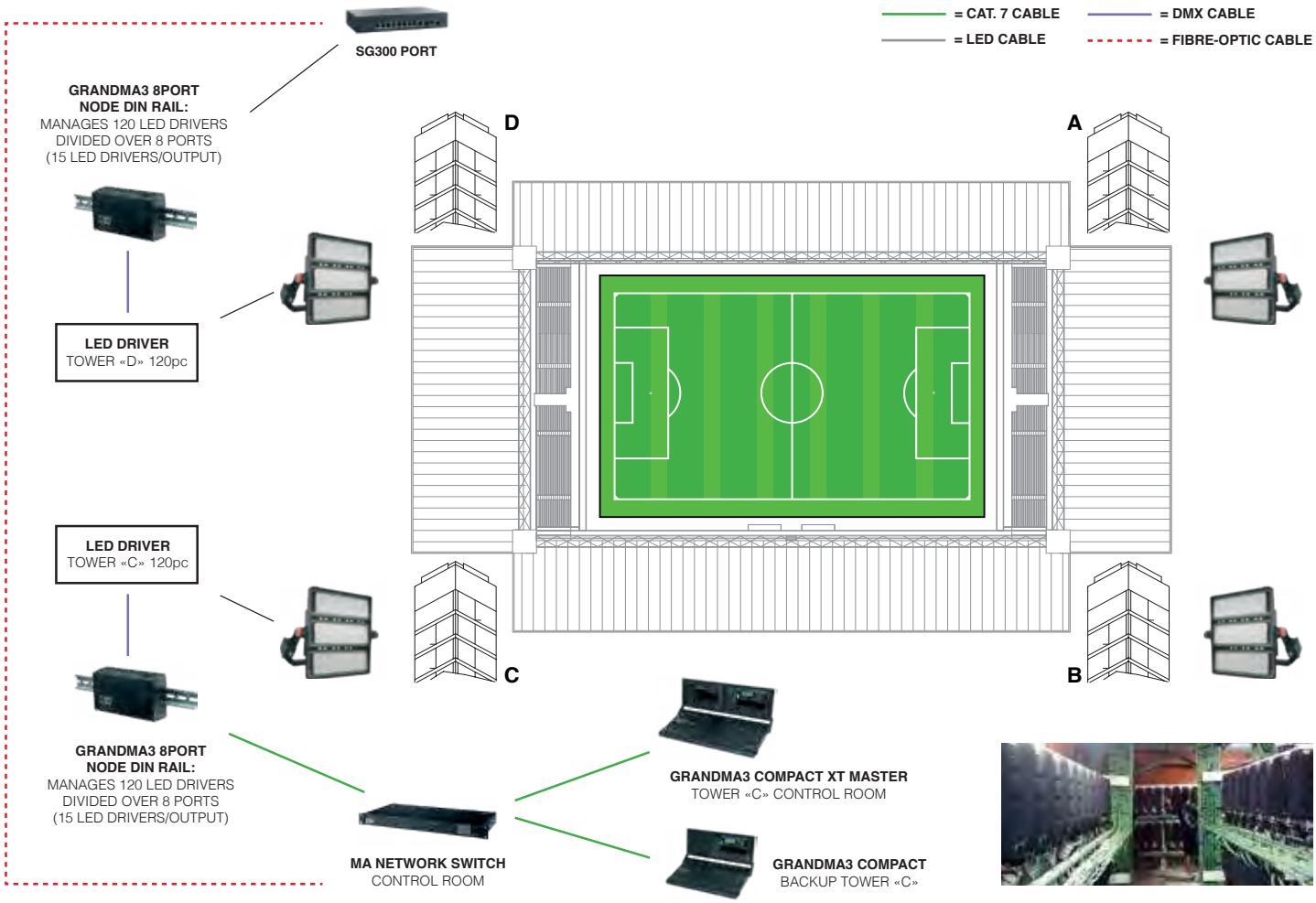

For more information see www.disano.it

DMX SOLUTION

To create ambience lighting that highlights important architectural structures and gives otherwise anonymous buildings an unimaginable aesthetic value. The possibilities offered by coloured lights can be further enhanced with an additional element: dynamism.

This type of solution applies to the following products:











Disano offers different solutions depending on the complexity of the setting and the number of lighting fixtures to be controlled:

• DOP CONTROLLER:
Ideal for less complex settings with luminaires that change colour simultaneously. For users who are unfamiliar with the technology, there is a simple rotary potentiometer that can easily create colour-changing scenes.

• DMX MINI CONTROLLER:
Ideal for medium-complexity sets, it comes with 10 pre-set scenes that can be simply recalled using a special button on the controller (e.g. single fixed colour, continuous colour sequence, Italian flag). A computer or smartphone is required for programming customised scenes.

• BLE DMX CONTROLLER:
Controller featuring IP66 protection and CASAMBI Bluetooth technology to programme and control a simple DMX installation in broadcast mode via free APP available for mobile devices.

• DMX/RDM CONTROLLER:
Ideal for installations with a large number of luminaires and complex set designs. The RDM technology allows creating extremely flexible systems that can be managed with special software and recalled via Apps for smart devices.

RDM type: RDM stands for Remote Device Management and is a communication protocol (based on DMX) whose purpose is to enable two-way communication between a DMX controller and a luminaire. The purpose is to communicate remotely with RDM luminaires without having to open the fixture itself. It is sufficient to simply connect the luminaires to the DMX controller with RDM function to detect them and assign the desired address once the installation is complete.

Disano RGBW DMX/RDM products with built-in driver are equipped with this technology.

DMX controller

DOP controller - IP20



cod. 986563-00

Recessed rotary DMX controller to set colour, dimming level and rotating programmes for RGB and RGBW luminaires with DMX technology.

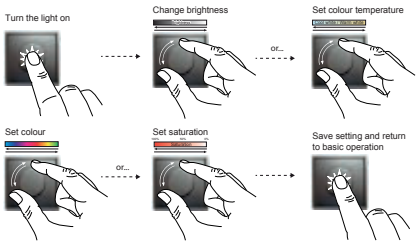

FEATURES:
- One rotary button for On-Off/dimming/colour/animation control
- Required power supply: 12 - 32Vdc; min. power 2W (power supplier not included)
- Configuration mode via Dip-Swich
- Device control in broadcast mode
- Suitable for recessed mounting in 502 box

DMX mini controller - IP20



cod. 986460-00

The solution for simple DMX installations where standalone control is sufficient. Equipped with a DIN rail adapter, it can be easily mounted in an electrical control cabinet. It is possible to create your own static or dynamic lighting scenes with the ESA2 software or via a free app from any smart device and upload them to the DMX MINI CONTROLLER via the supplied USB connector.
Mini DMX **does not** support group addressing through the RDM protocol. When ordering, please specify if you need a system with multiple addresses.

FEATURES:
- Supplied with 10 pre-set scenes that can be recalled using a front button - 60 channels
- Configuration mode via ESA2 software (free download) and via smartphone with OTG function, with Arcolis APP (free download)
- DIN rail adapter and USB cable included
- Necessary power supply: 5 - 5.5Vdc via micro USB (power supplier not included)
- DMX connection (screw terminals)
- Compact dimensions (52 x 29 x 24 mm



App

BLE DMX controller



cod. 81420057

Wireless DMX controller with CASAMBI technology. It programmes and controls a simple DMX installation via APP from any smart device. It can be integrated into existing CASAMBI networks.

FEATURES:
- Programming and scene recall with CASAMBI technology
- Device control via broadcast mode
- Necessary power supply: 230V
- DMX connection screw terminals
- Compact dimensions (115 x 123 x 62 mm)
- Suitable for indoor and outdoor applications (IP67 enclosures)



App

DMX/RDM controller



IP20
cod. 986562-00

BOX-IP65
cod. 986557-00

DMX controller with RDM addressing function. Built-in Wi-Fi connection for wireless management. Suitable for highly complex semi-professional DMX installations. Connected via USB cable to a PC, it turns it into a DMX console (with software installed and running). Stand Alone function by uploading the programmes created with dedicated software to the internal memory.

FEATURES:
- Up to 99 settable scenes via front micro-buttons - 512 channels expandable to 1024
- Configuration mode via ESA2 software (free download)
- USB cable included
- Necessary power supply: 5 - 5.5Vdc via micro USB Type C (power supplier not included)
- DMX cannon connector
- Compact dimensions (77 x 87 x 40 mm)



App

DMX accessories

DMX/RDM splitter



IP20
cod. 986461-00

BOX-IP65
cod. 986513-00

If the system has more than 32 luminaires and/or the DMX line has an extension of more than 250 m, a splitter must be inserted. This will amplify, regenerate and branch the signal, distributing it to 4 outputs for a maximum of 128 luminaires (32 for each output).

FEATURES:
- Necessary power supply: 12 - 24 - 48Vdc; max. current 500mA (power supplier not included for IP20 version)
- 4 outputs for up to 128 luminaires (32 for each output)
- Adapter for installation on 4 DIN rail modules
- Dimensions (72 x 92 x 71 mm



GENERAL CHARACTERISTICS

Housing: in die-cast aluminium with cooling fins.

Diffuser: tempered glass, 4 mm thick, resistant to thermal shock and impacts (UNI-EN 12150-1 : 2001).

Coating: the fully automated powder-coating cycle involves a polyester-based, salt-spray corrosion-resistant and UV-stabilised paint.

Upon request: protective coating recommended for marine environments within 5 km of the sea.

Standard Supply: complete with galvanised and coated bracket; external screws and bolts in stainless steel; air recirculation valve; double waterproof connector for quick installation with **no need to open the fixture.**

LED: power factor: ≥0,9.
Luminous flux maintenance 80%: 80.000h (L80B10).

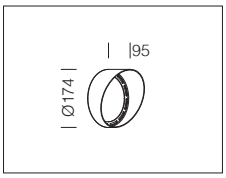

acc. 625
small conveyor
145518-00
In aluminium graphite. To be used for conveying the light beam in a single direction. For Cripto small.

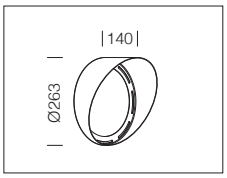

acc. 625
medium conveyor
145519-00
In aluminium graphite. To be used for conveying the light beam in a single direction. For Cripto medium.

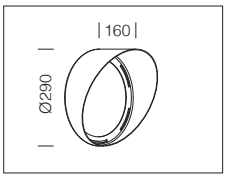

acc. 625
big conveyor
145520-00
In aluminium graphite. To be used for conveying the light beam in a single direction. For Cripto big.

RGO Ethr
+40 C° -20
U.V.

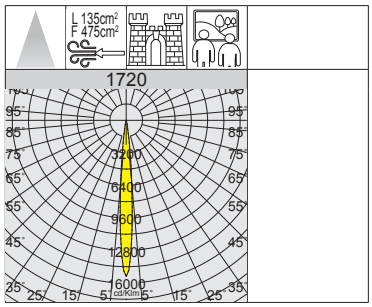

Upon request: version with 25° or 35° beam opening.



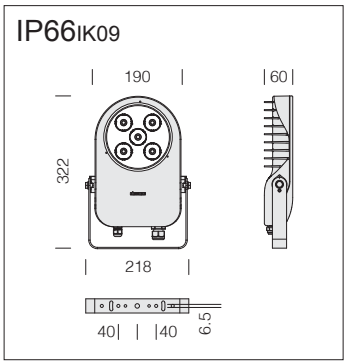

For DMX management of the luminaire, see the section about DMX controllers and accessories.

RGBW DMX RDM

1720 Cripto small - LED RGBW DMX/RDM					
		CLD DMX			LUMEN OUTPUT (tq= 25 °C)
LED	colour	weight	code	W tot	K - ølm - degrees
LED RGBW	graphite	2.20	413058-00	**max. 50**	R= 376lm - G= **980lm** - B= 155lm W= 752lm (3000K) - 10°

Upon request: DMX start address 1 (1=RED 2=GREEN 3=BLUE 4=WHITE)
- Without DMX signal (loss of signal or upon start-up): functions at 100% WHITE with no light shows
- With DMX signal: stage light effects sent from the central control unit

Upon request:
1) Custom DMX addressing
2) STAND ALONE colour selection (Red, Green, Blue, White or any other colour such as Orange, Pink, Light Blue, Purple, etc.)
3) DMX PERSONALITY setting: in case of loss of DMX signal, the fixture will set itself to a random colour, which can be either the same or different from the STAND ALONE colour (to be specified upon ordering)

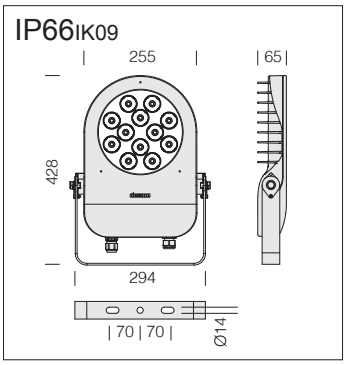

For DMX management of the luminaire, see the section about DMX controllers and accessories.



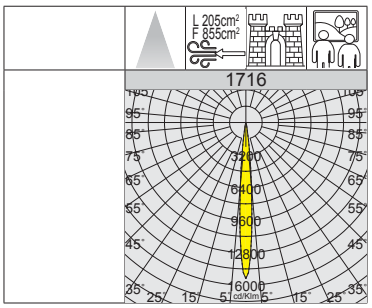

Upon request: version with 25° or 35° beam opening.

1716 Cripto medium - LED RGBW DMX/RDM

		CLD DMX			LUMEN OUTPUT (tq= 25 °C)
LED	colour	weight	code	W tot	K - ølm - degrees
LED RGBW	graphite	4.90	413068-00	**max. 50**	R= 392lm - G= 1162lm - B= 175lm W= 845lm (3000K) - 10°

Upon request: DMX start address 1 (1=RED 2=GREEN 3=BLUE 4=WHITE)
- Without DMX signal (loss of signal or upon start-up): functions at 100% WHITE with no light shows
- With DMX signal: stage light effects sent from the central control unit

Upon request:
1) Custom DMX addressing
2) STAND ALONE colour selection (Red, Green, Blue, White or any other colour such as Orange, Pink, Light Blue, Purple, etc.)
3) DMX PERSONALITY setting: in case of loss of DMX signal, the fixture will set itself to a random colour, which can be either the same or different from the STAND ALONE colour (to be specified upon ordering)

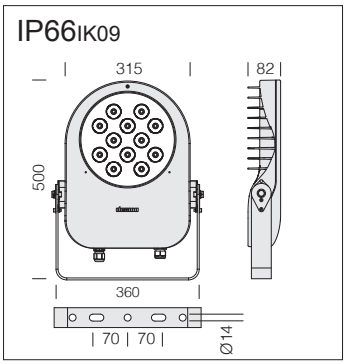

For DMX management of the luminaire, see the section about DMX controllers and accessories.



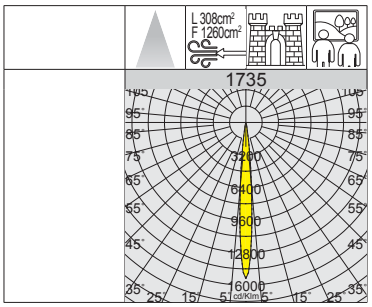

Upon request: version with 25° or 35° beam opening.

1735 Cripto big - LED RGBW DMX/RDM

		CLD DMX			LUMEN OUTPUT (tq= 25 °C)
LED	colour	weight	code	W tot	K - ølm - degrees
LED RGBW	graphite	7.70	413198-00	**max. 100**	R= 798lm - G= **2085lm** - B= 334lm W= 1625lm (3000K) - 10°

Upon request: DMX start address 1 (1=RED 2=GREEN 3=BLUE 4=WHITE)
- Without DMX signal (loss of signal or upon start-up): functions at 100% WHITE with no light shows
- With DMX signal: stage light effects sent from the central control unit

Upon request:
1) Custom DMX addressing
2) STAND ALONE colour selection (Red, Green, Blue, White or any other colour such as Orange, Pink, Light Blue, Purple, etc.)
3) DMX PERSONALITY setting: in case of loss of DMX signal, the fixture will set itself to a random colour, which can be either the same or different from the STAND ALONE colour (to be specified upon ordering)





GENERAL CHARACTERISTICS

Housing: in die-cast aluminium with cooling fins.

Diffuser: 5mm thick tempered glass, resistant to thermal shocks and impacts (UNI-EN 12150-1 : 2001).

Coating: the fully automated powder-coating cycle involves a polyester-based, salt-spray corrosion-resistant and UV-stabilised paint.

Upon request: protective coating recommended for marine environments within 5 km of the sea.

Standard Supply: complete with galvanised and coated bracket. Silicone rubber gasket; external screws and bolts in stainless steel; air recirculation valve. Waterproof connector for quick installation with **no need to open the fixture.**

RGO Ethr

+40 C° -20

U.V.

RGBW DMX RDM

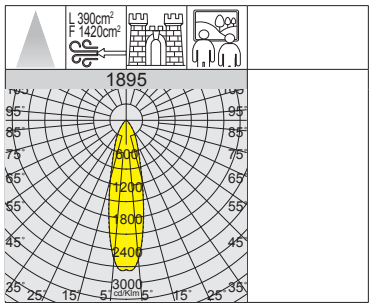



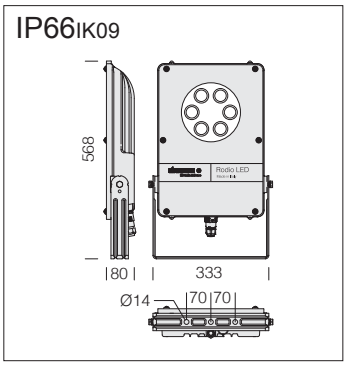

For DMX management of the luminaire, see the section about DMX controllers and accessories.

1895 Rodio - LED RGBW DMX/RDM					
		CLD DMX			LUMEN OUTPUT (tq= 25 °C)
LED	colour	weight	code	W tot	K - ølm - degrees
LED RGBW	graphite	6.00	414830-00	**max. 50**	R= 387lm - G= 604lm - B= 137lm W= 630lm (4000K) - 26°

Upon request: DMX start address 1 (1=RED 2=GREEN 3=BLUE 4=WHITE)
- Without DMX signal (loss of signal or upon start-up): functions at 100% WHITE with no light shows
- With DMX signal: stage light effects sent from the central control unit

Upon request:
1) Custom DMX addressing
2) STAND ALONE colour selection (Red, Green, Blue, White or any other colour such as Orange, Pink, Light Blue, Purple, etc.)
3) DMX PERSONALITY setting: in case of loss of DMX signal, the fixture will set itself to a random colour, which can be either the same or different from the STAND ALONE colour (to be specified upon ordering)

GENERAL CHARACTERISTICS

Housing: die-cast aluminium with cooling fins.

Diffuser: tempered glass 4 mm thermal shock and impact resistant (UNI-EN 12150-1 : 2001).

Coating: the fully automated powder-coating cycle involves a polyester-based, salt-spray corrosion-resistant and UV-stabilised paint.

Upon request: protective coating recommended for marine environments within 5 km of the sea.

Standard Supply: electronic safety device to protect the LED module and the related ballast compliant with EN 61547.



IP65IK08

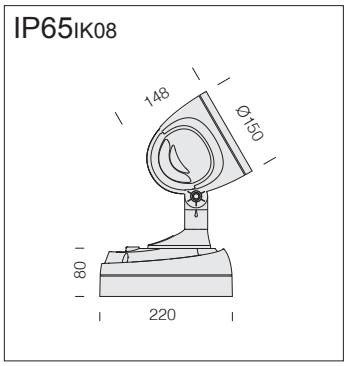

For DMX management of the luminaire, see the section about DMX controllers and accessories.



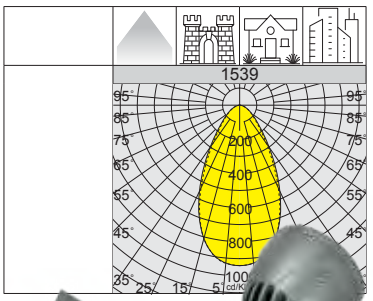



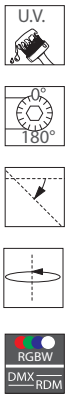

1539 Elfo - LED RGBW DMX/RDM					
		CLD DMX			LUMEN OUTPUT (tq= 25 °C)
LED	colour	weight	code	W tot	K - ølm 700mA
LED RGBW	grey	3.60	432834-00	**38**	R= 370lm - G= 665lm - B= 110lm W= 790lm (4000K)

Upon request: DMX start address 1 (1=RED 2=GREEN 3=BLUE 4=WHITE)
- Without DMX signal (loss of signal or upon start-up): functions at 100% WHITE with no light shows
- With DMX signal: stage light effects sent from the central control unit

Upon request:
1) Custom DMX addressing
2) STAND ALONE colour selection (Red, Green, Blue, White or any other colour such as Orange, Pink, Light Blue, Purple, etc.)
3) DMX PERSONALITY setting: in case of loss of DMX signal, the fixture will set itself to a random colour, which can be either the same or different from the STAND ALONE colour (to be specified upon ordering)





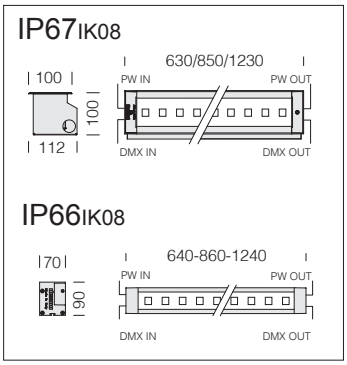

SICURA - RGBW - DMX/RDM (on request)	
TW (on request)	2700K - 3000K - 4000K - 5000K
Version	RGBW - TUNABLE WHITE
Standard beam	elliptic - narrow - medium - wide - asymm.

ELECTRICAL DRIVE CHARACTERISTICS	
Electrical connect.	loop in-out
Equipment	DMX/RDM or stand-alone

Sicura - LED RGBW DMX/RDM

LED	CLD DMX								W tot
	WHITE 4000K		RED		GREEN		BLUE		
	ølm	w	ølm	w	ølm	w	ølm	w	
SICURA RGBW 600	1300lm	13W	260lm	12W	760lm	12W	33lm	13W	50W
SICURA RGBW 800	1740lm	17W	360lm	16W	1010lm	16W	450lm	17W	66W
SICURA RGBW 1200	2600lm	26W	520lm	24W	1520lm	24W	670lm	26W	100W

GENERAL CHARACTERISTICS

Housing: complete with graphite aluminium frame with die-cast aluminium end caps; extruded aluminium suitable for continuous row for recessed version.

Diffuser: tempered shock, resis tant to impacts, thermal shocks and loads (recessed: max load 2000 kg) 8 mm thick glass.

For DMX management of the luminaire, see the section about DMX controllers and accessories.

Upon request: DMX start address 1 (1=RED 2=GREEN 3=BLUE 4=WHITE)
- Without DMX signal (loss of signal or upon start-up): functions at 100% WHITE with no light shows
- With DMX signal: stage light effects sent from the central control unit

Upon request:
1) Custom DMX addressing
2) STAND ALONE colour selection (Red, Green, Blue, White or any other colour such as Orange, Pink, Light Blue, Purple, etc.)
3) DMX PERSONALITY setting: in case of loss of DMX signal, the fixture will set itself to a random colour, which can be either the same or different from the STAND ALONE colour (to be specified upon ordering)

INSTALLATION AND ACCESSORIES

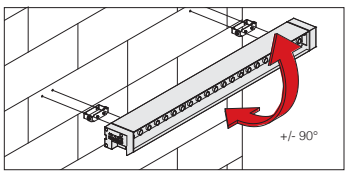

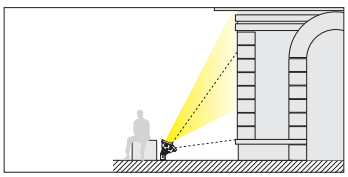

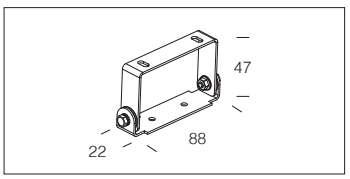

acc. 535 adjustable connection

grey	993970-00

For direct ceiling installation. Capacity: 6 Kg. **2 for pack.**

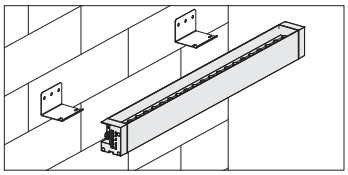

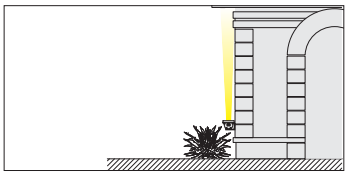

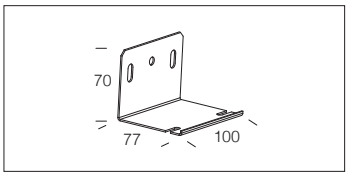

acc. 536 bracket

grey	993972-00

To install Sicura permanently on walls. **2 for pack.**

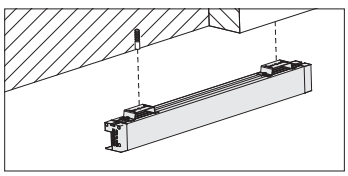

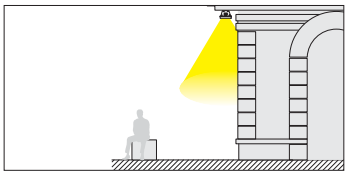

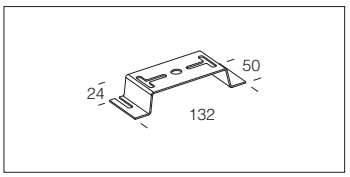

acc. 376 ceiling moun. unit

galvanized	145151-00

For direct ceiling installation. Only for equipment with direct light. **2 for pack.**

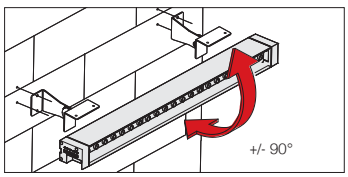

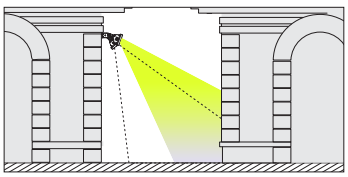

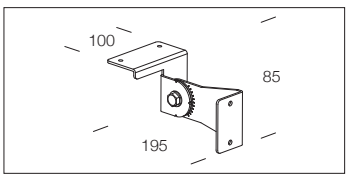

acc. 537 adjustable connection

galvanized	993974-00

To install Sicura on walls or ceiling. To be used for continuous lines. **2 for pack.**

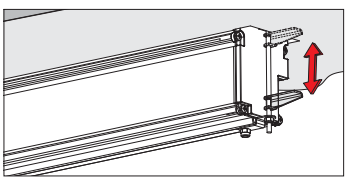

acc. 905 bracket

s. steel	998013-00

Support for ceiling mounting. Packet containing 2 brackets.

GENERAL CHARACTERISTICS

Housing/Chassis: in die-cast aluminium.

Frame: in AISI 316L stainless steel.

Outer shell: in black nylon reinforced fibreglass.

Reflector: revolving with max. 0/+15° graduated brackets, in metalized polycarbonate.

Diffuser: 15 mm tempered glass, resistant to thermal shocks, impacts and static load.

Coating: the standard powder coating consists of a first metal surface pre-treatment stage and of single layer of UV-stabilised, corrosion and salt resistant polyester powder coating.

Equipment: silicone rubber seal and screws in anti-grip stainless steel.



IP68 IK10

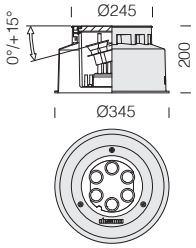

For DMX management of the luminaire, see the section about DMX controllers and accessories.



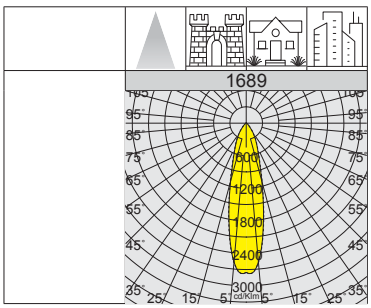



1689 Floor - adjustable - LED RGBW DMX/RDM										
		CLD DMX		temperature and load						LUMEN OUTPUT (tq= 25 °C)
LED	colour	weight	code	T. max on glass ta 25°	T. max on glass ta 15°	max load kg	can be walked on	can bear vehicle loads	W tot	ølm - degrees
LED RGBW	s. steel	6.30	530540-00	40°	30°	4000	OK	OK	**max. 50**	R= 387lm - G= 604lm - B= 137lm W= 630lm (4000K) - 26°

Upon request: DMX start address 1 (1=RED 2=GREEN 3=BLUE 4=WHITE)
- Without DMX signal (loss of signal or upon start-up): functions at 100% WHITE with no light shows
- With DMX signal: stage light effects sent from the central control unit

Upon request:
1) Custom DMX addressing
2) STAND ALONE colour selection (Red, Green, Blue, White or any other colour such as Orange, Pink, Light Blue, Purple, etc.)
3) DMX PERSONALITY setting: in case of loss of DMX signal, the fixture will set itself to a random colour, which can be either the same or different from the STAND ALONE colour (to be specified upon ordering)



RGB CONTROL SOLUTIONS

1) STAND-ALONE SOLUTION

KIT acc.61 + acc.65: solution for simple installations where a stand-alone control is sufficient. It is managed using a remote control to recall preset dynamic scenes or select a determined colour and intensity.

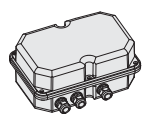

acc. 61 RGB power supplier - IP67	
25W	986512-00

RGB LED driver supplied in IP67 waterproof box with IRE receiver. Suitable for powering up to 5 Microfloor RGB Fullcolor. It is possible to connect up to a maximum of 20 acc.61 in cascade mode with a special synchronisation cable.



acc. 65 remote control
986507-00

IR remote control to be used in combination with acc. 61 to control the RGB system. It allows switching lights on and off, selecting colour and light intensity and recalling pre-set programmes and rotation speed.

2) DMX/RDM SOLUTION

POWER SUPPLIER acc.63: solution for integrating Microfloor into DMX/RDM controlled installations. For DMX luminaire management see DMX controllers and accessories.

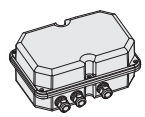

acc. 63 RGB DMX/RDM power supplier - IP67	
50W	986511-00

RGB LED driver supplied in IP67 enclosure controllable by DMX signal and addressable with RDM technology. Suitable for powering up to 11 Microfloor RGB Fullcolor fixtures.

Default settings: powering up the luminaire in the absence of a DMX signal will automatically start a pre-set colour sequence (stand-alone operation).
When a signal is present the luminaire automatically switches to the DMX controller (DMX default address: 1).
Upon request: the luminaire can be supplied with stand-alone programming and customized DMX address.

IP67IK08

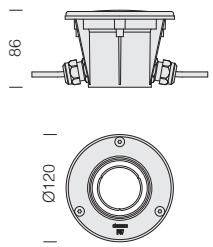



It is advised to install Starled according to the following information.

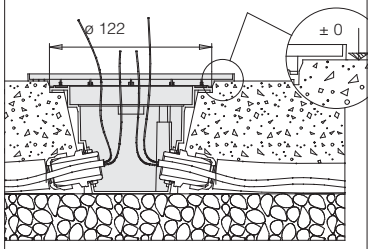

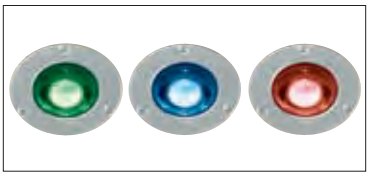

ø120

RGB FULL COLOR

GENERAL CHARACTERISTICS

Housing: fibreglass nylon with stainless steel AISI 316L frame.

Diffuser: tempered shock and heat resistant glass.

1635 Microfloor - adjustable - LED RGB Fullcolor

		S+L		temperature and load					LED (tj= 25 °C)
LED	colour	peso	code	T. max on glass ta 25°	max load kg	can be walked on	can bear vehicle loads (*)	W	ølm 350mA
RGB Fullcolor	s. steel	0.40	530800-00	40°	2000	ok	ok	**4,5**	105lm

Luminaire supplied without power supplier. See the section about RGB control solutions (stand-alone or DMX/RMD) depending on intended use.

acc. 313 - outer shell

993925-00

To install Microfloor into the ground.

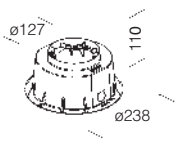

acc. 314 - chassis

993926-00

To install Microfloor on the wall.

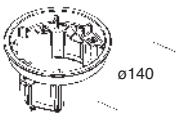

IP67IK10

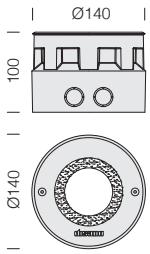



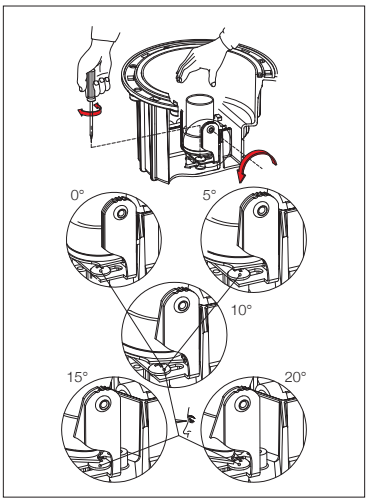

ø140

RGB FULL COLOR

GENERAL CHARACTERISTICS

Housing: made in die-cast aluminum with stainless steel AISI 316L frame and fibreglass nylon outer shell.

Diffuser: tempered shock and heat resistant glass.

(*) drive-over fixture for **restricted traffic areas.**

1871 Midifloor - adjustable - LED RGB Fullcolor

		S+L		temperature and load					LED (tj= 25 °C)
LED	colour	weight	code	T. max on glass	max load kg	can be walked on	can bear vehicle loads (*)	W	ølm 350mA
RGB Fullcolor	s. steel	1.10	530790-00	40°	3000	ok	ok	**4,5**	105lm

Luminaire supplied without power supplier. See the section about RGB control solutions (stand-alone or DMX/RMD) depending on intended use.

Fixtures with Emergency Kit

Emergency lighting is an essential safety system to ensure the protection of people during emergency situations. People who are left in the dark during power outages or block-outs, especially in crowded places or during a catastrophic event, will feel uneasy, hence increasing the risk of getting hurt because uneasiness can easily turn into panic. Therefore, an efficient emergency lighting system is an essential requirement to guarantee a safe and fast evacuation during emergencies. If this system is designed in compliance with existing laws and regulations, it will provide the necessary aid that, together with adequate safety signals, will ensure a smooth evacuation from the premises.

Emergency lighting

Back-up lighting
designed for workplaces with potentially hazardous situations. In the event of power outages, it serves as "general lighting" for limited periods of time, so that work activities can be terminated, and premises can be evacuated safely.

Safety lighting
designed to provide minimum light levels to avoid panic and dangerous situations. Escape routes and exit signage must be easily recognisable and visible enough to allow people to escape safely from any location.

Anti-panic lighting
to mitigate panic during a blackout and effectively guide people to safety routes.

Escape route lighting
to highlight emergency escape routes and ensure a safe evacuation accurately and clearly.

Safety lighting
for workplaces where potentially work hazards exist *(lights must turn on with a maximum delay of 0.5 seconds, providing at least 10% of the required illuminance for the task being performed or reaching a minimum of 15 lux)*

Safety factor is crucial in designing a good EMergency lighting system
Therefore, any obstacle within two metres above ground level must be illuminated, ensuring there is no risk of bumping or tripping due to insufficient lighting conditions. Emergency lights and signage should be installed at a minimum height of two metres above ground level to ensure visibility even in crowded rooms. In cases where the emergency exit is not immediately visible, an illuminated sign should be installed to indicate the correct direction and evacuation route. For emergency lighting, we provide four practical and cost-effective solutions to fulfil various needs:

EM S.A. **EM Basic** | EM S.E. **EM Basic** | -95 ED **EM EDali** | -0066 AD **EM AD 1h** | -0050 EM-EC **EM EC** | DRIVER AC/DC **EM AC** standard AC/DC driver

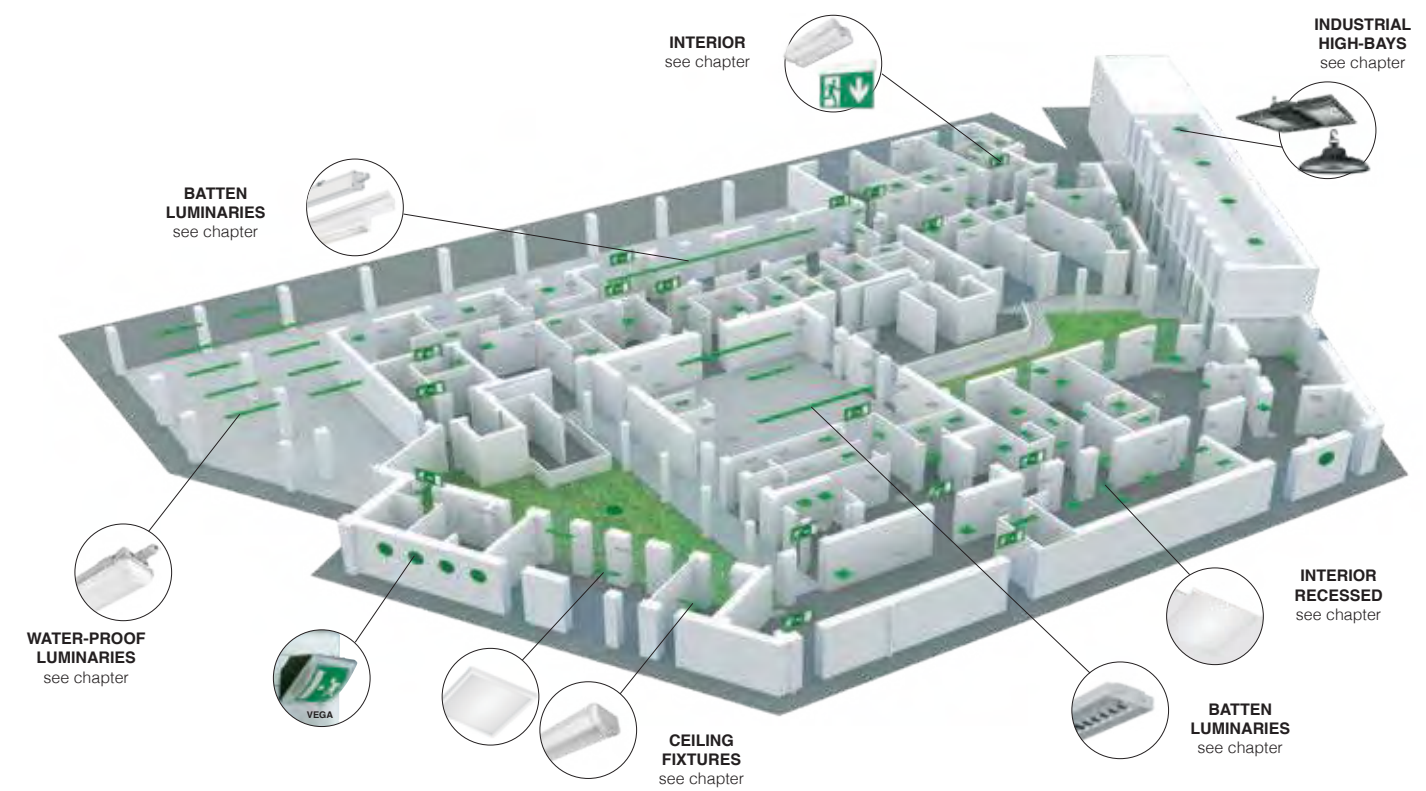

Autonomy
The autonomy of emergency luminaires is governed by IEC standards and guidelines. Emergency luminaires typically ensure continuity for 1 or 1.5 h intervals, depending on their use within the rooms they are installed. While some products declare an autonomy of up to 3 hours or more, the aging of batteries can compromise their ability to meet these declared specifications. In such cases, replacing old batteries becomes necessary. It is recommended to perform a complete battery discharge and recharge cycle at least once every three months to ensure optimal system efficiency.

Recharge
The product standard specifies a charging time of either 12 or 24 hours, which is necessary to recharge the battery and ensure devices maintain their nominal range.
1h = 24h
3h = 24h (or a 12-hour charging period for 1.5 h of autonomy)

EM S.A.

During a blackout, emergency lights ensure practical and safe operation, preventing any inconvenience caused by the sudden loss of lighting. They can be divided in:

1) luminaires with built-in emergency module: **subcode -07**

2) luminaires with external emergency module: **subcode -07 or -85 + acc. 1175**

3) luminaires with external emergency module, standard version -00 **+ acc. 600** emergency kit

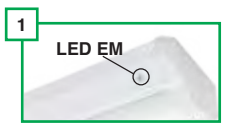



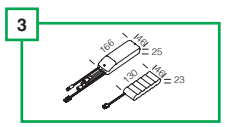

EM Basic: flux percentage (lm) in the EM version only with kit

W tot	1h	3h	W tot	1h	3h	W tot	1h	3h
5	84%	35%	**21**	20%	8%	**37**	11%	5%
6	69%	29%	**22**	19%	8%	**38**	11%	4%
7	59%	25%	**23**	18%	7%	**39**	11%	4%
8	52%	22%	**24**	17%	7%	**40**	10%	4%
9	46%	19%	**25**	16%	7%	**41**	10%	4%
10	41%	17%	**26**	16%	7%	**42**	10%	4%
11	38%	16%	**27**	15%	6%	**43**	10%	4%
12	34%	14%	**28**	15%	6%	**44**	9%	4%
13	32%	13%	**29**	14%	6%	**45**	9%	4%
14	29%	12%	**30**	14%	6%	**46**	9%	4%
15	27%	11%	**31**	13%	6%	**47**	9%	4%
16	26%	11%	**32**	13%	5%	**48**	9%	4%
17	24%	10%	**33**	12%	5%	**49**	8%	3%
18	23%	10%	**34**	12%	5%	**50**	8%	3%
19	22%	9%	**35**	12%	5%			
20	21%	9%	**36**	11%	5%			

When the battery is charging, the power consumption (W tot) will exceed 3 watts. During maintenance (when the battery is charging), the total power (W tot) will exceed a value ranging between 0.5 and 1 Watt.

-95 ED

Luminaires with **subcode -95** are available with an emergency system featuring the standard DALI protocol (inverter only), compliant with EN 62386-202 and compatible with all advanced centralised control systems. The biggest advantage of using the DALI protocol in emergency lighting lies in its capability to control both general and emergency lights using a single busbar. This simplifies both the wiring of the system (busbar) and the programming of the entire lighting installation.

NOTE: the -95 equipped product will remain ON-OFF and not DALI dimmable (order with subcode -9541).

ADVANTAGES: control of the status of the lighting source (lamp or LED module); control of the emergency battery; functional and/or autonomy tests conducted on the luminaire, groups of luminaires, or the entire system; control of the light intensity on Only EMergency (SE) and Always On (SA)

EXAMPLE OF REMOTE CONTROL SYSTEM
NOTE: to order lighting fixtures with an emergency module based on the DALI protocol, use **subcode -95.**

BUS DALI

L N 230Vac

MASTER DALI BUS
(Please contact our customer service for information)

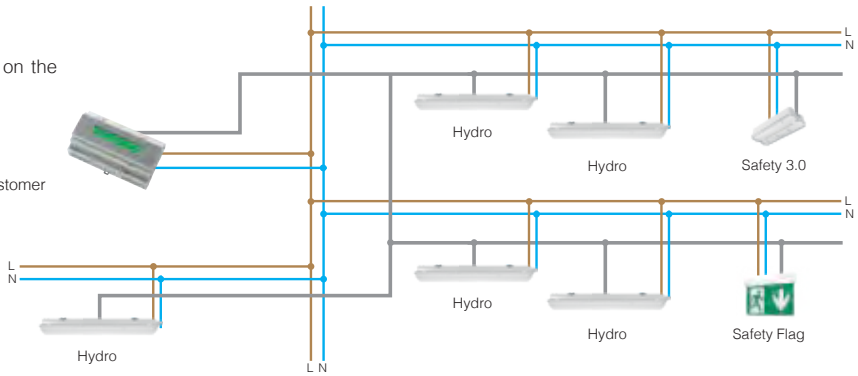

-0066 AD

Most emergency ceiling lights can be equipped with a local self-diagnostic system by adding **subcode -0066** to the product's ordinary code when ordering. The self-diagnosis module is equipped with an advanced microprocessor device, enabling it to perform various checks automatically and autonomously at certain time periods.
The module performs two types of tests at different periodic intervals:
1) functionality test: a short test is conducted automatically to verify the luminaire's operation.
2) battery duration test: automatically checks the battery's life by turning on the lamp for the pre-set interval. All signage is handled by one single tri-colour V-G-R LED, which indicates the kit's various operating statuses.

EXAMPLE OF LOCALISED SELF-DIAGNOSTIC LIGHTS

A localised self-diagnostic system uses an integrated module that monitors the operation of the emergency light on each individual lighting fixture. This function is recommended for use in small simple rooms, and an accessory component is to be used on each single fixture.

NOTE: to order lighting fixtures with the self-diagnostic module use **subcode -0066.**

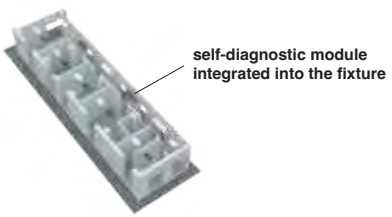

-0050 EM-EC

With emergency wiring with centralised power supply **CLD EC sub-code -0050**: permanent luminaire, with power supply unit operating in AC/DC, powered by a central emergency unit (not incorporated into the luminaire).

RECOMMENDED INSTALLATIONS:
- environments with very high ceilings (warehouses, distribution centres, hubs, etc.)
- environments where maintenance may be difficult (indoor swimming pools)
- large or multi-storey facilities where remote control is preferred (offices, hospitals, public places)



MAINTENANCE DOES NOT REQUIRE THE USE OF SPECIAL MACHINERY



MAINTENANCE CAN BE DONE DIRECTLY IN THE ELECTRICAL PANEL



REMOTE VERIFICATIONS CAN BE CONDUCTED



The use of LED lights in horticulture will:

• Help you save up to 75% on your energy bills.

• Help you save up to 90% on the water used: less heat means lower evaporation rates, which will help relieve the global water crisis.

• Increase plant growth factor: higher levels of red light will increase crop growth.

Improve nature

To guarantee food supply in the future, choose Disano's horticulture LED lights! This type of fixtures can offer a spectrum of endless possibilities, encouraging photosynthesis and plant growth in height or width at different wavelengths to be able to implement a systematic cultivation.

What is horticulture lighting and how is it used?

Horticulture lighting is used to encourage, increase and enable plant growth using artificial lighting. LED lights represent a very efficient and innovative solution for this type of application!

Supplementary lighting
To provide additional quantity and quality of illumination not achieved with the artificial lighting system in order to improve the photosyntentisis and therefore the growth and quality of the plants in greenhouses.

Photoperiod regulation
To control the plant's internal clock. It can be used at the end of the light cycle to trigger plant flowering within short days.

Plant growing in the absence of natural daylight
To fully replace sunlight and control climate conditions.

Glossary (basic terminology)

PAR Region
• Photosynthetic Active Radiation is the bandwidth from 400 nm to 700 nm, which is the light which plants primarily use.
• Different plants require different wavelength combinations within the PAR region.

PPF (Photosynthetic Photon Flux) measured in µmol/s
• Total number of photons emitted per second in the PAR region.

PPFD (Photosynthetic Photon Flux Density) measured in µmol/m2s
• Represents the number of photons that reaches the plant within the PAR region over a given area.
• It declines exponentially as the distance between the light source and the plant surface increases.

DLI (Daily Lighting Integral)
• Plants need a minimum amount of light per day to meet their basic biological needs. It varies based on species.
• For flowering and fruiting, high levels of light can show significant increases in both the quality and quantity.

Applications

Greenhouses: currently used in conventional lighting systems. Plants are illuminated top down with sources that mimic sunlight.

Inter lighting: light is positioned between the tall leafy plants. This reduces the shade on leaves that may be created with top-down lighting.

Multilayer cultivation: suited for growing plants in environments with little or no sunlight exposure; lights can be positioned on the plant because they do not heat up and consume 85% less than fluorescent tubes.

Home farming: ideal for non-industrial settings, such as restaurants, florists and hotels where it is possible to keep the necessary lighting level for the growth and preservation of plants also in the absence of sunlight.

LED characteristics

• *Deep blue (450 nm)* and *hyper red (660 nm)* to guarantee the light required by the photosynthesis
• *Far red* (730 nm) to control the plant from germination to vegetative growth and to flowering
• *Mint White* (EQW) to add green content
• *Mint White* (EQW) to create a human-centric work environment
• High energy efficiency in µmol/J
• High drive current up to 1 A
• Low thermal resistance between 3.8 and 6 K/W
• Different angles of radiation – point-source or diffuse lighting (80°-120°- 150°)
• Resistant in wet environments

The influence of colours on plants

Perfect light for plants does NOT mean perfect light for our eyes!
Numerous research and tests show that the radiations of red and blue light spectra form the most efficient wavelengths for the production of plants' chemical energy. Insufficient illumination or an inappropriate composition of different wavelengths have anomalous consequences or may even be harmful for plant growth. Knowing the behaviour of plants when illuminated by different colours will affect the expected result, and will help monitor and improve the quality of the crops. In other terms, knowing means being able to design a lighting system that can boost each phase of the plant growth.



Lighting initiates photochemical reactions: humans react to light stimulation with photoreceptors which show peaks of light absorption at 555 nm (S,M,L); in plants, instead, photosynthetic efficiency is primarily guided by chlorophyll a and b. Peaks of light absorption of chlorophyll a are 665 nm and 465 nm.

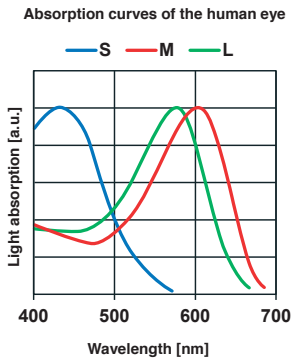

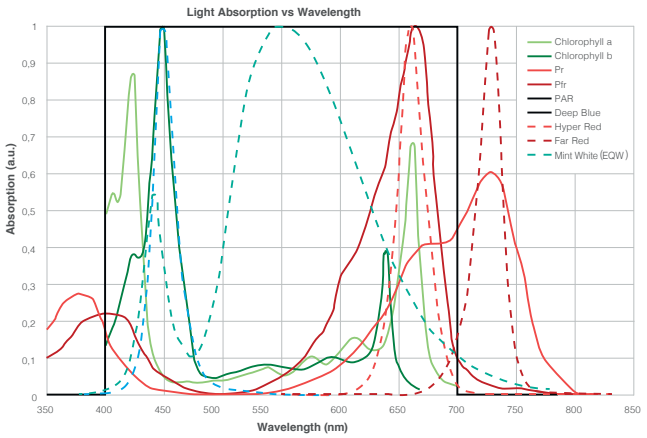

Sunlight intercepted by chlorophyll a and b and actually available as energy for the photosynthesis is **Photosynthetic Active Radiation (PAR)** corresponding to 41% of the total sun radiation, and concentrates within the blue and red wavelengths, with peaks at 430 nm and 680 nm.
This region includes the following sub-regions:
- blue-violet, (400-490 nm), absorbed by pigments used for flowering, protein synthesis, phototropic effects, average effect on the photosynthesis;
- green (490-560 nm), the least photosynthetically active radiation;
- yellow (560-590 nm);
- red-orange (590-700 nm), very photosynthetically active radiation.

Effects of LED lighting and advantages of specific spectrum systems

- *Tailored emission spectrum*: ad hoc composition of wavelengths capable of affecting the photomorphogenesis of plants (growth, shape and flowering); the simulation and full control over the various phases of daylight.
- *Faster on/off time*: lights get instantly to their full light level; adjustment to daylight changes, ensuring higher energy savings.
- *Longer lamp life*: the extremely long service life of the LEDs (>50000 hours) entails lower maintenance costs and, above all, a quick return on the investment.
- *Supplementary lighting*: to provide additional quantity and quality of illumination not achieved with the artificial lighting system in order to improve the photosyntentisis and therefore the growth and quality of the plants in greenhouses.
- *Plant growing in the absence of natural sunlight*: to fully replace sunlight and control climate conditions.

Dedicated Disano Products:

Forma	Radon	Astro Q	Rodio	Sicura
				

Conclusions

- Greenhouses will play an increasingly important role in food supply.
- The globally increasing demand for high-quality food production will lead to a greater demand for greenhouses fit for this purpose.
- Light is the key element to boost plant photosynthesis.
- Light is made up of different wavelengths that help the various phases of plant photosynthesis.
- The light emitted by most traditional light sources (fluorescent or high-pressure sodium lamps) is insufficient and expensive.
- The LED technology allows adjusting the light and the lamps to a specific requirement based on the plants' emission spectrum



The Disano Group addresses the horticulture lighting sector by putting its professional lighting consultants at the complete disposal of users to develop tailor-made solutions by using specialist jargon and a vast expertise in LED lighting, technical characteristics and cultivation layouts.
Disano offers reliable products that can perfectly dissipate heat, withstand humidity and adjust to different types of crops (from hydroponic greenhouses to home farming applications).



UPON REQUEST: ART. 2168 RADON HP IN THE SPECIAL VERSION WITH HIGH POWER LED SOURCES >650W

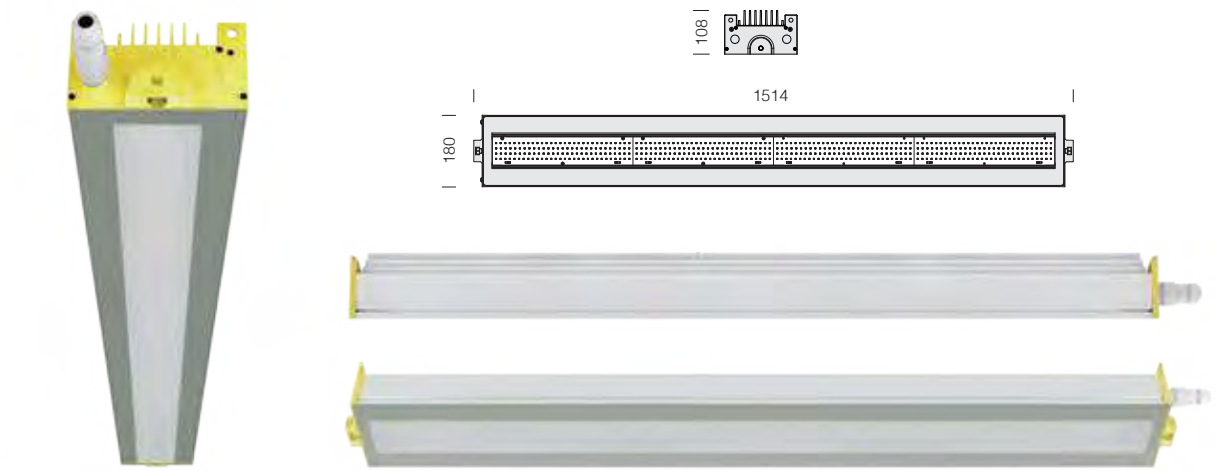

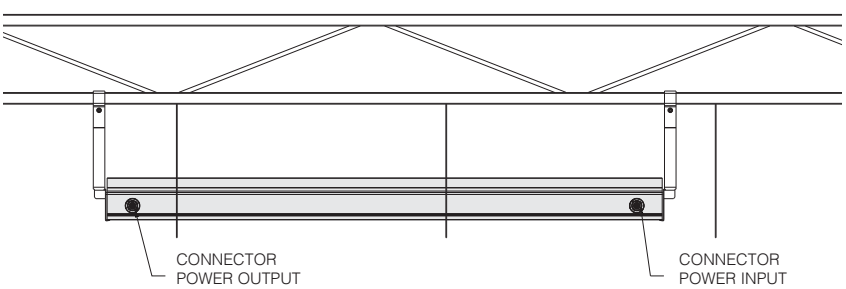

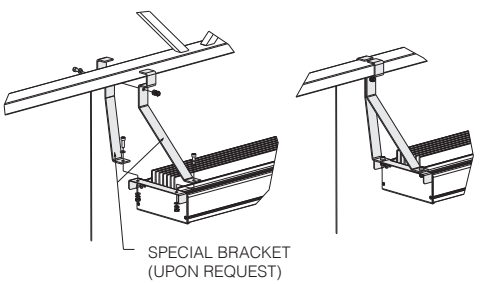

GENERAL CHARACTERISTICS

Housing: in extruded aluminium with terminal ends in die-cast aluminium; provision for cable management

Diffuser: 4 mm thick temperate glass resistant to thermal shock and impacts (UNI EN 12150-1:2001).

Coating: the fully automated powder-coating cycle involves a polyester-based, salt-spray corrosion-resistant and UV-stabilised paint.

Standard supply: complete with mounting bracket with standard eyebolt to install the fixture as a suspension lamp, including stainless steel screws, plug-socket connector for fast and easy installation **without any need to open the lamp**.

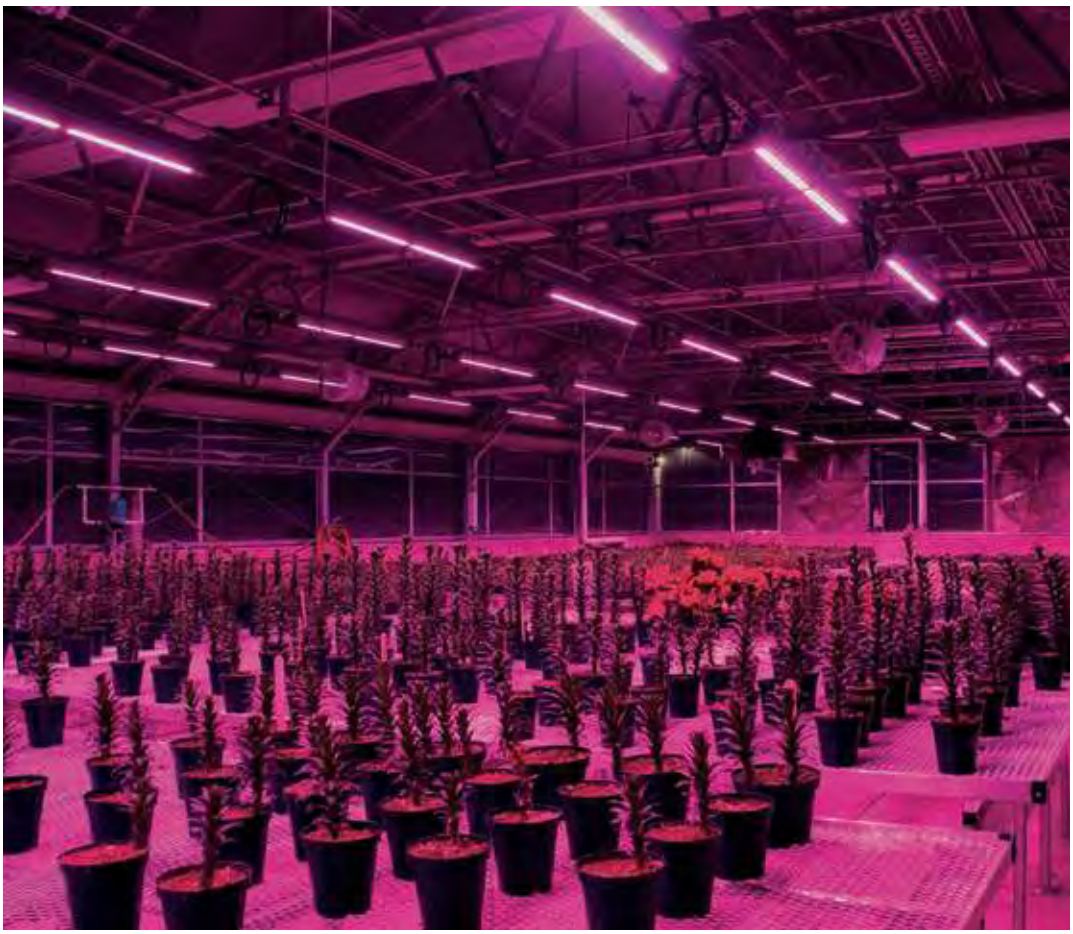

IP66IK08

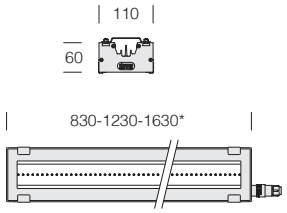

***** 1630mm version **upon request**

Reflector: matt aluminium.

Tailored emission spectrum: ad hoc composition of wavelengths capable of affecting the photomorphogenesis of plants (growth, shape and flowering).

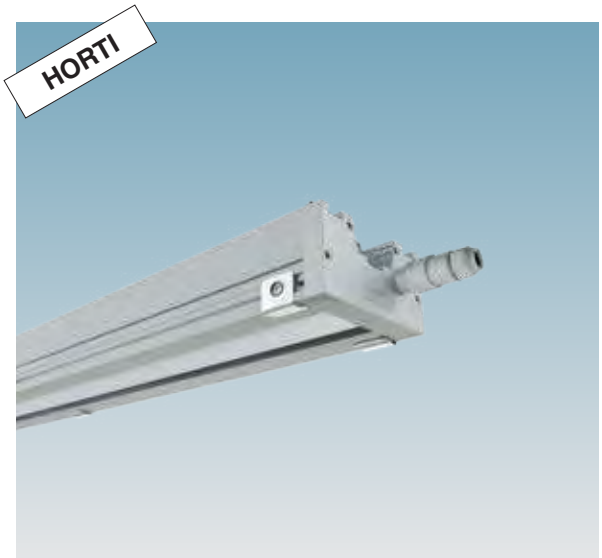

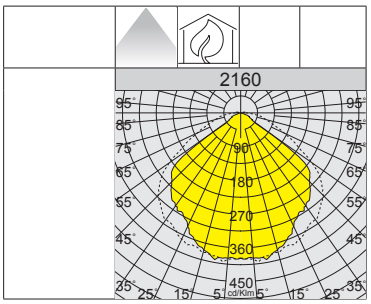

U.V.

LOW FLICKER

2160 Radon - HORTI - 2 channels (Deep blue - Hyper Red)

				LED
LED	colour	L	W	Photosynthetic photon flux (400-700nm) - Photosynthetic photon efficacy
LED	graphite / grey	830	**120**	370 [µmol/s] - 3.10 [µmol/J]
LED	graphite / grey	1230	**181**	554 [µmol/s] - 3.10 [µmol/J]

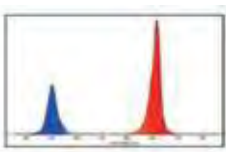

2160 Radon - HORTI - 4 channels (Deep Blue – White CRI70 4000K - Hyper Red - Far Red)

				LED
LED	colour	L	W	Photosynthetic photon flux (400-700nm) - Photosynthetic photon efficacy
LED	graphite / grey	830	**130**	358 [µmol/s] - 2.75 [µmol/J]
LED	graphite / grey	1230	**196**	537 [µmol/s] - 2.75 [µmol/J]

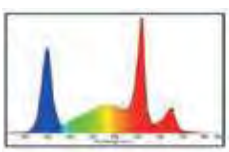

“A new technology to disinfect, sanitize and purify air and surfaces”

UV fixtures are the best way to eliminate airborne microorganisms that may cause certain epidemic infectious diseases

We’re live surrounded by microorganisms: bacteria, viruses, moulds, yeasts and protozoa. Shortwave UV radiation is a very effective physical method for eliminating and inactivating these microorganisms. The nuclei in the cells are subjected to a photolytic reaction that prevents their replication. The germicidal effect of light is provided in the shortwave UV band below 320 nm.

UV irradiation is the most RELIABLE, ECO-FRIENDLY, EASY-TO-USE and LOW-COST method for sanitizing the surfaces in the spaces where we spend most of our time.

Highly frequented places can be sanitized with UV lamps. UV rays trigger a photochemical reaction within the germs damaging their protein structure to alter their DNA/RNA. This makes them harmless and unable to replicate, preventing the spread of contagion, disease or damage.
Ultraviolet germicidal irradiation is a safe, proven and effective technology for the **elimination of microorganisms** like bacteria, viruses, fungi, spores, mites and moulds. It ensures bacteriologically controlled surfaces and can be used in luminaires for the bacteriological sanitization of:

- offices and schools
- waiting rooms
- medical studios
- bars and restaurants
- shopping malls and stores
- gyms
- beauty salons and wellness centres
- hotels






Reliable: scientific research has shown that ultraviolet rays can affect water and air-borne microorganisms, be they bacteria, viruses, fungi, algae, spores, or other (Note: before installing luminaires fitting UV sources, be sure to contact a qualified technician for the design stage).

Ecological: UV radiation is a physical, not a chemical, disinfection system. UV rays act on the nucleus of the cell that, when properly irradiated, is subjected to a reaction that prevents the reproduction process in a completely natural way (without using chemical disinfectants).

Low-cost: disinfection with ultraviolet lamps is currently the most economical option offered by technology.

Design: the Disano group is happy to offer expert advice to designers when planning the space where the lights will be installed.

MAIN ADVANTAGES OF UV

EFFECTIVE
Kills 99.9% of microorganisms

FAST
Extremely fast sanitization time

EASY TO USE
Can be installed as recessed, ceiling and floor lamp for night-time use and in the absence of people inside the room

LOW-COST
Considerable saving of time and disinfectants

ECOLOGICAL
Does not interact with foreign bodies and does not require additives that may not be biodegradable

Note: UV does not replace cleaning

Legend

- The presence of people is allowed
- Versions also including general lighting
- The presence of people is not allowed
- Versions with UV lighting only

Ultraviolet germicidal irradiation

Ultraviolet radiation (UV) is that portion of the electromagnetic spectrum that goes from the lower wavelength limit of the visible light to the upper wavelength limit of X rays.

Ultraviolet radiation has a wavelength between 100 and 400 mm (1 nm = 10^{-9} m) and is not visible to the naked eye.
The UV spectrum is divided into three sub-regions:

- UV-A (long wavelength) from 315 to 400 nm (for medical and industrial use)
- UV-B (medium wavelength) from 280 to 315 nm (for curative medical use)
- UV-C (short wavelength) from 100 to 280 nm (for sanitization)

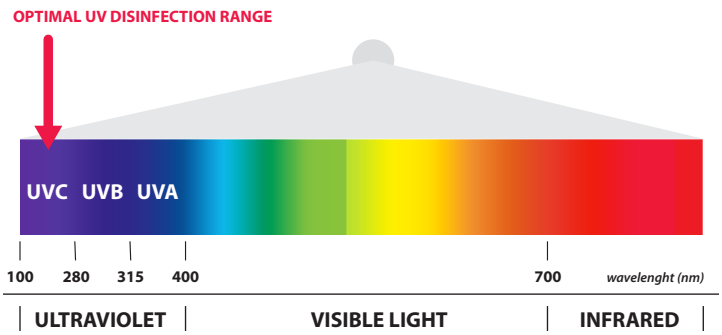

UV band eliminates bacteria, viruses, fungi, spores, moulds and mites, destroying the DNA and inhibiting its replication and proliferation.

UV technology is a physical disinfection method with an excellent cost-benefit ratio, it is ecological and, unlike chemical agents, it works against all microorganisms without creating resistance.

Thanks to the filtering action of the Earth's atmosphere, most UV in nature is UV-A, a very small portion is UV-B, and UV-C rays are practically absent.

The **UV-A** light modules are less aggressive than the UV-C modules and require longer sanitization time. It is therefore necessary to control ON/OFF times based on the absence/presence of people in the room. For example: sanitization can be carried out at night, on weekends, on holidays, on certain weekdays, when certain areas are closed.

The **UV-C** light modules are more aggressive than UV-A modules and allow shorter sanitization time. We recommend equipping the system with "absence devices" (sensors or smart technology) so that the UV-C modules will activate only when nobody is in the room.

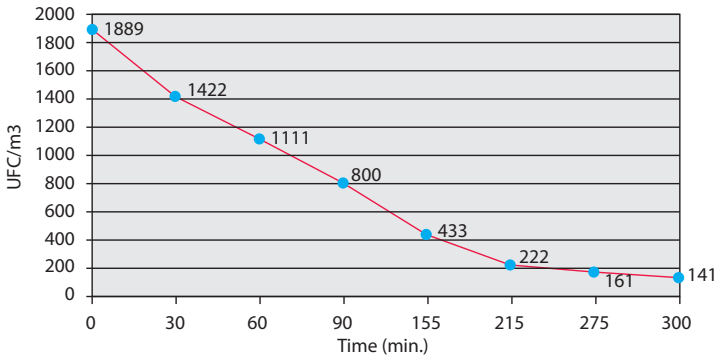

Reduction of microbial load over a period of time after the UV-C luminaire is switched on

APPLICATION TIPS

SECTORS/APPLICATIONS	**UV-A**: long sanitization time at night, weekends, holidays **(in the absence of people)**	**UV-C**: very short sanitization time temporary absence in a room **(in the absence of people)**
SCHOOLS	classrooms corridors gyms laboratories	break when exiting the classroom to move to another classroom
GYMS	training areas common areas	when moving from one lesson to the next locker rooms
FACTORIES	production storage common areas	assembly chain break lunch break
OFFICES	open space common areas restrooms	lunch break in rooms between one conference and the next
STORES	sales warehouses	fitting rooms (between one customer and the next)
HOTELS	utility rooms kitchens bars and restaurants	reception when changing room when cleaning empty common areas
DENTISTS/BEAUTICIANS	all areas	when moving from a room to the next
WAITING ROOMS	all areas	during short closures to the public
SHOPPING MALLS	all areas	after cleaning bathrooms and transit areas (before re-opening to the public)
HOSPITALS AND HEALTH CENTRES	all areas except patient/visitor rooms	when the staff leaves their work station for patient visits or rounds

Before installing UV luminaires, be sure to entrust the lighting design to a professional lighting designer.

UV lighting for sanitization

* NOTE:

• UV light may cause serious damage to the skin or the eyes, therefore avoid direct exposure on humans, animals and plants.

• Lighting fixtures equipped with UV-C LED sources must be **used only in the absence of people.**

Luminaires must be installed by qualified staff to ensure compliance with safety and radiation protection requirements.

The human eye cannot see ultraviolet light. Exposure to UV-B and UV-C radiation without using skin or eye protection may cause erythema (reddening of the skin) or conjunctivitis (inflammation of the eye).

UV luminaires can be installed in a room by simply connecting them to the lighting system. This type of application requires the supervision of a qualified installer who will assess the safety of the system, based on whether or not people* are inside the room.

The use of UV sources, especially those in the UV-C wavelength band, require special attention as they can cause inflammation and damage, sometimes even permanently. This is why it is essential that UV sources are used when there are no people and/or animals in the room.
• Use of timers or time switchers (on-off timers).
• Use of “absence” detectors (sensors).
• Use of SMART control devices to control the lighting system.



Example of installation with “absence” sensors:

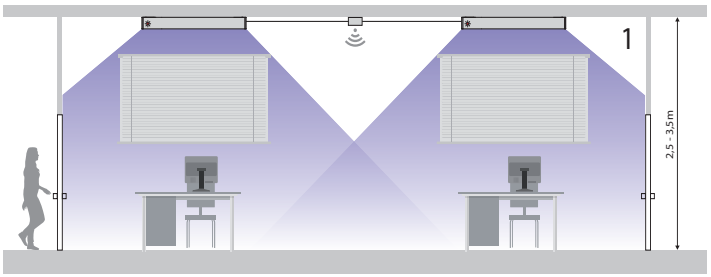

1) When the power supply is switched on and the sensor doesn’t detect any presence in the room for 60 seconds, the UV lamp will turn on and a red LED light will be visible.

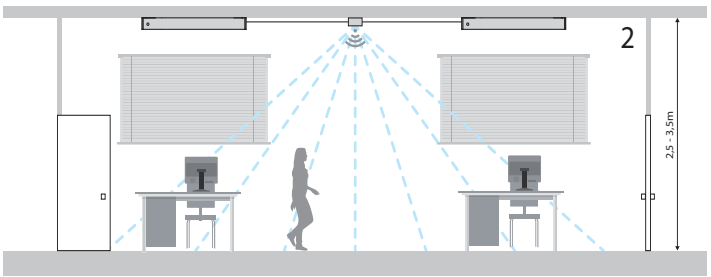

2) As soon as the sensor detects movement, the UV lamp will automatically go off (together with the red LED light).

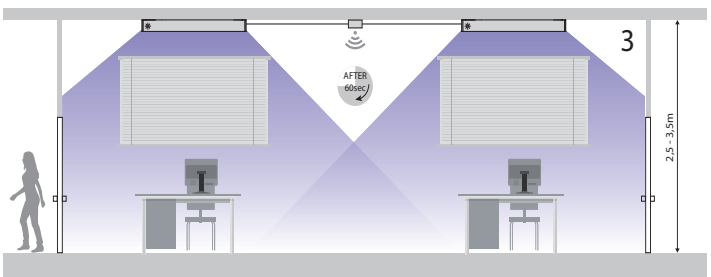

3) If 60 seconds go by and no movement is detected, the lamp will turn on again (in the UV mode) and the red LED light will be visible again.



Before installing UV luminaires, **be sure to entrust the lighting design to a professional lighting designer.** The main factors to consider for a proper use of UV sources are:

- radiated power
- exposure time
- distance
- emission spectrum

For a UV lamp to be effective on spores, germs, bacteria and viruses, the lighting system must be designed so that the above parameters are correctly combined in order to achieve the desired results according to scientific/academic studies and literature.

Practical example of surface sanitization:



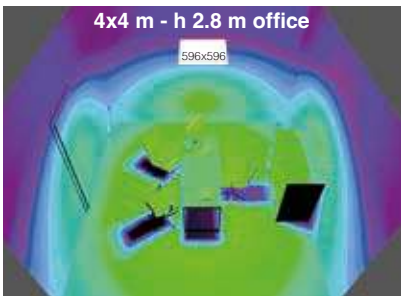

Log Reduction Scale: The number in the log reduction value refers to the number of nines shown in the percentage, which indicates the percentage of microorganisms that are eliminated by a given disinfection procedure			
1-Log Reduction	=	90% inactivation	Classification
2-Log Reduction	=	99.9% inactivation	Detergent
3-Log Reduction	=	99.99% inactivation	Detergent/Sanitizing
4-Log Reduction	=	99.999% inactivation	**Sanitizing**
5-Log Reduction	=	99.9999% inactivation	Disinfectant
6-Log Reduction	=	99.99999% inactivation	Disinfectant
7-Log Reduction	=	99.999999% inactivation	Disinfectant
8-Log Reduction	=	99.9999999% inactivation	Disinfectant
9-Log Reduction	=	99.99999999% inactivation	Sterilant
10-Log Reduction	=	99.999999999% inactivation	

Irradiance and Fluence Scale 4x4 m office

E_e	0,00002	0,00003	0,00005	0,00007	0,0001	0,0002	0,0003	0,0005	0,00075	0,001	0,002	0,003	0,005	0,0075	0,01	0,02	0,03	0,05	0,075	0,1	0,2	0,3	0,5	0,75	1	1,5	[mW/cm2]
30 Min	0,036	0,054	0,09	0,126	0,18	0,36	0,54	0,9	1,35	1,8	3,6	5,4	9	13,5	18	36	54	90	135	180	360	540	900	1350	1800	2700	[mJ/cm2]

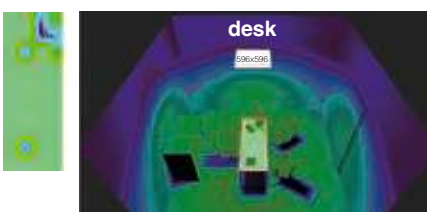

Calculation area= 60x160cm - h from ground= 75cm

Luminaire data:
- Quantity= 1
- P(UV-C)= 3.95W
- P(Wtot)= 21 W

Results:
- Average irradiance: E_e= 0,03 mW/cm²
- Minimum irradiance: E_{min}= 0,01 mW/cm²
- Uniformity: U_0 = 70%
- UV dose for Covid-19*= 22 mJ/cm²

Log4 (estimated)= 30 min

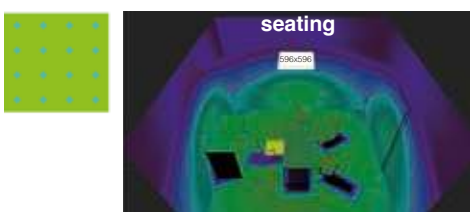

Calculation area= 40x40cm - h from ground= 45cm

Luminaire data:
- Quantity= 1
- P(UV-C)= 3.95W
- P(Wtot)= 21 W

Results:
- Average irradiance: E_e= 0,024 mW/cm²
- Minimum irradiance: E_{min}= 0,023 mW/cm²
- Uniformity: U_0 = 90%
- UV dose for Covid-19*= 22 mJ/cm²

Log4 (estimated)= 16 min

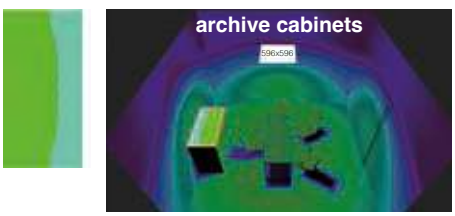

Calculation area= 60x160cm - h from ground= 75cm

Luminaire data:
- Quantity= 1
- P(UV-C)= 3.95W
- P(Wtot)= 21 W

Results:
- Average irradiance: E_e= 0,012 mW/cm²
- Minimum irradiance: E_{min}= 0,008 mW/cm²
- Uniformity : U_0 = 65%
- UV dose for Covid-19*= 22 mJ/cm²

Log4 (estimated)= 48 min



Before installing UV luminaires, be sure to entrust the lighting design to a professional lighting designer.

IP66IK10

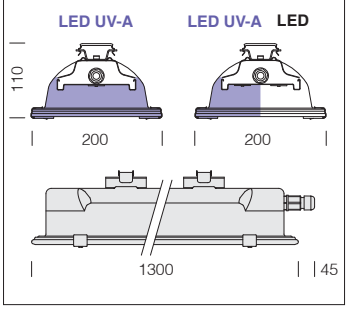

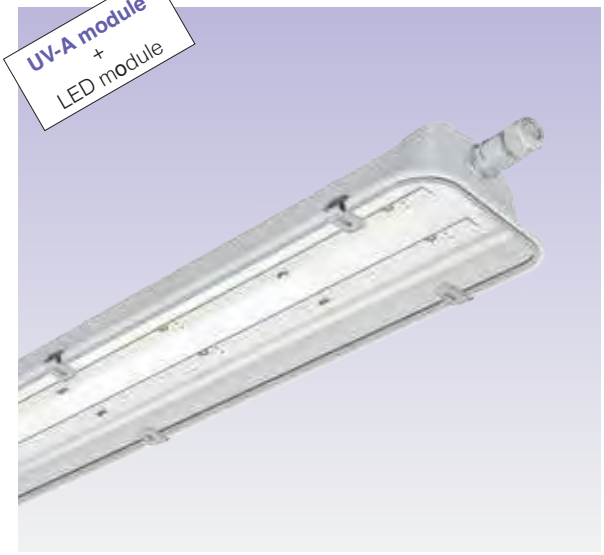



4000K
L80 B20 50.000h
L E D

L90 UV-A 9.000h
U V

GENERAL CHARACTERISTICS

Housing: pressed steel, in a single piece of high mechanical resistance.

Diffuser: impact-resistant transparent tempered glass.

- 2-lamps version with separate switches: one for the general lights, the other for UV sanitization.
- complete with built-in UV module operating indicator to ensure the safety of people.

983 Forma

				CLD			CELL (T8)		
colour	peso	version	code	LED	W tot	LUMEN OUTPUT (tq= 25 °C)	UV-A	W tot	UV-A (W) RADIATION
s. silver	5.00	1-lamp	162465-65	-	-	-	1x	66	21
		2-lamps	162466-65	1x	43	4000K - 5820lm - CRI 80	1x	66	21
Single version (1-lamp): intended solely for sanitization, not for general lighting.									

IP40IK07

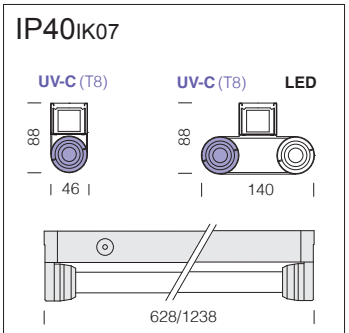

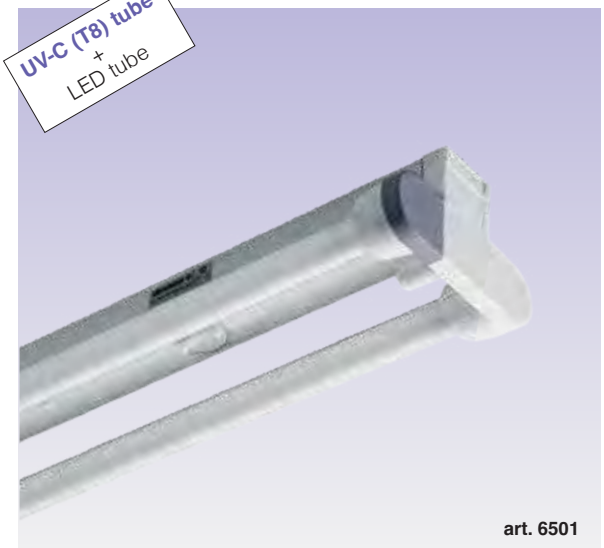



4000K
LED 30.000h
L E D

UV-C 9.000h
U V

GENERAL CHARACTERISTICS

Fixture housing: galvanized steel previously stove-enamelled with UV-stabilised white polyester resin; rounded edges to prevent cutting; polycarbonate end caps.

Standard supply: nylon fastening pawl supplied with power terminal block.

- art. 6501 with separate switches: one for the general lights, the other for UV sanitization.
- complete with built-in UV module operating indicator to ensure the safety of people.

6401 Rapid System T8 - with knife swtch

				CLD			CELL (T8)		
colour	weight	L	code	LED	W tot	LUMEN OUTPUT (tq= 25 °C)	UV-C	W tot	UV-C (W) RADIATION
white	1.00	46x1238	237531-69	-	-	-	1x	38	15
Single version: intended solely for sanitization, not for general lighting.									

6501 Rapid System T8 - with knife swtch

				CLD			CELL (T8)		
colour	weight	L	code	LED	W tot	LUMEN OUTPUT (tq= 25 °C)	UV-C	W tot	UV-C (W) RADIATION
white	1.00	140x628	238045-69	1x	8	4000K - 800lm - CRI 80	1x	21	4,5
	1.50	140x1238	237536-69	1x	15	4000K - 1600lm - CRI 80	1x	38	15

Before installing UV luminaires, be sure to entrust the lighting design to a professional lighting designer.

"Recommended values for indoor and outdoor sports lighting"

(refer to Standard UNI EN 12193 - CONI for further details)

ACTIVITY / PLANT	activity level (a)	INDOOR (b)			OUTDOOR (b)			Note
		average illuminance (lux)	min/medium illuminance	specific illuminance (lux)	average illuminance (lux)	min/medium illuminance	specific illuminance (lux)	
ATHLETICS	3	500	0,7	1000 (1)	500	0,7	1000 (1)	(1) fotofinish
	2	200	0,5		300	0,6		
	1	100	0,5		200	0,5		
SWIMMING (POOLS)	3	500	0,7		500	0,7		
	2	300	0,7		300	0,7		
	1	200	0,5		200	0,5		
BASEBALL	3	750 (1)	0,7(1)		750(1)	0,7(1)		(1) infield
	2	500 (1)	0,5(1)					
	1	300 (1)	0,5(1)					
FOOTBALL	3	500	0,7					
	2	200	0,6					
	1	75	0,5					
FOOTBALL FIVE	3	500	0,7		750	0,7		
	2	200	0,7		500	0,7		
	1	100	0,5		200	0,5		
CYCLING	3	500	0,7	1000 (1)	750	0,7	1000 (1)	(1) fotofinish vert. plane
	2	300	0,7		500	0,7		
	1	100	0,5		200	0,5		
GOLF	3-2	100 (1)	0,8	100 (2)				(1) tee (2) hole
GYMNASTICS	3				500	0,7		
	2				300	0,6		
	1				200	0,5		
HOCKEY and ROLLER SKATING	3	500	0,7		750	0,7		
	2	200	0,7		500	0,7		
	2	200	0,7		300	0,7		
BASKETBALL VOLLEYBALL HANDBALL WRESTLING WEIGHTLIFTING JUDO	3	500	0,7		750	0,7		
	2	200	0,6		500	0,7		
	1	100	0,5		200	0,5		
BOXING	3				2000 (1)	0,8		(1) on the ring
	2				1000 (1)	0,8		
	1				500 (1)	0,5		
RUGBY	3	500	0,7					
	2	200	0,6					
	1	75	0,5					
EQUESTRIAN SPORTS	3	500	0,7		500	0,7		
	2	300	0,6		200	0,5		
	1	200	0,5		100	0,5		
MOTORSPORTS	3	200	0,6	1000 (1)	200	0,6	1000 (1)	(1) fotofinish
	2	200	0,6		200	0,6		
	1	80	0,5		80	0,5		
ICE RINKS	3	750	0,7		750	0,7		
	2	500	0,7		500	0,7		
	1	200	0,5		300	0,7		
TENNIS/SQUASH	3	500	0,7		750	0,7		
	2	300	0,7		500	0,7		
	1	200	0,6		300	0,5		

N.B.: Level: (a) 1. Non professional level - 2. Local professional level - 3. National and international professional level

(b) All luminance values, except otherwise stated, refer to the horizontal plane that matches the surfaces where the activity takes place (water surface for swimming activities).

Overview of illuminance levels for UEFA competitions

Type of match	UEFA illuminance level
• UEFA EURO • UEFA Champions League final • UEFA Europa League final	Elite level A
• UEFA Champions League: group stage to semi-finals • UEFA Super Cup final	Level A
• UEFA Women's EURO • UEFA European Under-21 Championship: Final tournament • UEFA Champions League: Play-offs • UEFA Europa League: group stage to semi-finals • UEFA European Football Championship: qualifying matches	Level B
• UEFA Champions League: third qualifying round • UEFA Europa League: third qualifying round and play-offs • UEFA Champions League: second qualifying round • UEFA European Under-21 Championship: qualifying matches	Level C
• UEFA Champions League: first and second qualifying rounds • UEFA Europa League: First and second qualifying rounds • Youth and Women's Competitions: Qualifying rounds, group-stage and knock-out rounds (excluding final(s))	Level D
• Non-broadcast matches	> 350 lux

UEFA illuminance requirements: Elite level A

Eh ave (average horizontal illuminance)		> 2,000 lux	
Uniformity U1h	Uniformity U2h	> 0.50	> 0.70
Ev ave-0° (vertical illuminance on 0° reference plane)		average > 1,500 lux minimum > 1,000 lux	
Uniformity U1v-0°	Uniformity U2v-0°	> 0.40	> 0.50
Ev ave-90° (vertical illuminance on 90° reference plane)		average > 1,500 lux minimum > 1,000 lux	
Uniformity U1v-90°	Uniformity U2v-90°	> 0.40	> 0.50
Ev ave-180° (vertical illuminance on 180° reference plane)		average > 1,500 lux minimum > 1,000 lux	
Uniformity U1v-180°	Uniformity U2v-180°	> 0.40	> 0.50
Ev ave-270° (vertical illuminance on 270° reference plane)		average > 1,500 lux minimum > 1,000 lux	
Uniformity U1v-270°	Uniformity U2v-270°	> 0.40	> 0.50
Match continuity mode (MCM)		Eh ave >1,000 lux Ev4 ave > 600 lux	
Flicker factor (FF)		average < 5%	
Minimum adjacent uniformity ratio (MAUR)		> 0.60	
Colour temperature (Tk)		5,000–6,200K	
Colour rendering		≥ 80 Ra	
Maintenance factor (MF)		0.85	
Power supply		Elite level A	

CHEMICAL COMPOUND	METHACRYLATE	POLYCARBONATE	POLYAMIDE	PVC	ALUMINIUM	STEEL
Acetone	▲	●	●	●	■	■
Arsenio acid 20%	■	■	●	■	▲	●
Citric acid 20%	■	■	■	■	●	●
Hydrochloric acid 10%	■	■	▲	■	▲	●
Chloric acid	■	■	▲	■	▲	▲
Chromic acid	●	●	●	■	●	●
Formic acid up to 30%	●	●	■	■	▲	●
Nitric acid 20%	●	●	▲	■	▲	▲
Sulphuric acid up lo 30%	■	■	▲	■	▲	▲
Salt water	■	■	●	●	●	■
Ethyl alcohol	▲	■	■	■	■	■
Isopropyl alcohol	●	▲	■	■	●	■
Aniline	▲	▲	●	▲	■	■
Ammonia	■	▲	■	●	■	●
Benzine	■	■	■	■	■	■
High grade fuel	■	▲	▲	●	■	■
Benzol	▲	▲	●	▲	●	■
Alcoholic drinks	■	■	■	■	■	■
Bromine	▲	●	▲	▲	●	■
White lime	●	●	▲	▲	▲	■
Diesel fuel	●	●	●	■	■	■
Marine climate	■	■	■	■	●	●
Chloroform	▲	▲	●	●	■	■
Liquid chlorine (vapours)	▲	▲	●	▲	■	▲
Calcium chloride	■	■	■	■	■	●
Ferric chloride	■	●	■	■	●	●
Hexane	■	●	■	■	■	■
Ethylether	■	▲	■	▲	■	■
Phenols	▲	▲	▲	●	●	■
Glycerol	■	●	■	■	■	■
Hydrocarbons	●	▲	■	●	■	■
Methanol	▲	▲	●	■	●	■
Minerai oils	■	▲	■	■	■	■
Silicone oil	●	■	■	■	■	■
Diesel oil	■	●	■	■	■	■
Oil and food fats	■	●	■	■	■	■
Ozone	■	●	▲	●	■	●
Potassium permanganate	■	■	■	■	●	■
PVC with plasticizers	▲				■	■
Soda	■	▲	■	■	▲	▲
Watery zinc sulphate	■	■	■	■	■	■
Aluminium sulphate	■	■	■	■	■	■
Copper sulphate	■	■	■	■	■	●
Carbon tetrachloride	▲	▲	■	▲	■	■
Toluene	▲	●	●	▲	■	■
Trichloroethlene	▲	▲	■	●	■	■

The chemical products in thè table are only a part of thè existing ones. Please, check thè compatibility between thè component product materials and thè installation environment. There may be some variations in compatibility between thè material and chemical product according to thè concentration and temperature. Clean them with soapy water or with a very dilute solution of neutral and non-aggressive detergents. All of trichlorethylene type products, pericoloroetilene or solvents are to be avoided. Don't use abrasive or highly alkaline cleaners. Never scrape thè surfaces with squeegees, razor blades or other sharp instruments. Don't clean products when hot or or with an high ambient temperature.

Symbols used

▲ = non resistant
● = partially resistant
■ = resistant

LED general chemical compatibility list

This chemical compatibility list includes materials that are used and found in LED luminaire assembly and are known by us as critical regarding certain of their effects on LED packages, if used in the proximity of LEDs since interaction with the LED package may negatively impact the performance of the LEDs. This list only contains certain materials and certain compatibilities known to us and is not intended to provide a listing of all possible substances and their effects. Therefore, the absence of a substance from this list can neither be seen as a recommendation nor as any evaluation of such substance. Likewise, the concerns and applications in the list cannot be seen as conclusive, but other applications and/or concerns are possible. This list is subject to change without notice. **The list is provided for information only and is not a warranty or a specification**.

Material	Examples of applications	Effect on the LED packages		Examples for concerns regarding effects on the LED packages
		Critical	Non Critical	
Acetates	Can be found in the outgassing of adhesive or conformal coating materials.	X		Corrosion risk for LED.
Acetic acid	Can be found in RTV silicones, cutting fluids, degreasers or adhesives.	X		Corrosion risk for LED. May interact with silicones.
Acetone	Solvent	X		May cause swelling of silicone encapsulation.
Acrylates	Can be found in the outgassing of adhesive or conformal coating materials	X		Corrosion risk for LED if the adhesive or conformal coating material is not properly cured.
Acrylic adhesives (Two component type)	Sealants and adhesives	X		Corrosion risk for LED.
Acrylic latex caulk	Sealing materials	X		Corrosion risk for LED.
Acrylic rubber	Rubber/plastic seals	X		Corrosion risk for LED.
Acrylonitrile-Butadiene-Styrene, ABS	Structural plastic (widelyused in mobile phones)	X		Discoloration of encapsulant, housing material and lead frame may occur.
Aldehydes	Can be found in the outgassing of adhesive or conformal coating materials.	X		Discoloration of encapsulant, housing material and lead frame may occur.
Amines	Base material. Can be found in detergents or cleaners.	X		Discoloration of encapsulant, housing material and lead frame may occur.
Ammonia	Base material. Can be found in detergents or cleaners.	X		Discoloration of encapsulant, housing material and lead frame may occur.
Benzene	Solvent	X		May interact with silicones.
Bleach solution (mainly the component of hypochlorous acid)	Cleaning agents	X		Outgassing from bleach solutions may cause silicone encapsulation/lens/housing tarnishing; direct contact may cause encapsulation swelling and detachment.
Butadiene-containing adhesive	Adhesive	X		May cause material yellowing.
Butadiene rubber	Rubber/plastic seals	X		May cause silicone and lead frame yellowing.
Castor oil	Oil/lubricant	X		If the lubricant is made from natural sources, it may contain sulfur and cause silver-containing lead frame corrosion. May interact with silicones.
Chlorinated polyethylene	Rubber/plastic seals	X		May contain trace amount of HCl and result in lead frame corrosion.
Chlorosulphonated material	Rubber/plastic seals	X		Corrosion risk for LED.
Cutting fluids (oil & water based)	Manufacturing materials	X		May cause silicone encapsulation delamination, mechanical strength change or even crack.
Cyanoacrylates (could be found in adhesive materials)	Sealants and adhesives	X		Discoloration of encapsulant, housing material and lead frame; corrosion risk.
Dichloromethane	Solvent	X		May soften and/or tarnish silicone encapsulant/housing/lens.
Dienes	Can be found in the outgassing of adhesive or conformal coating materials.	X		Discoloration risk for silicone encapsulant/housing/lens.
Epichlorohydrin	Rubber/plastic seals	X		Corrosion risk for LED.
Epoxy adhesive (amine types)	Adhesive	X		Risky conditions due to amino compound outgassing, which can cause LED discoloration.
Ethanolamine	Can be found in detergents, emulsifiers, polishes	X		May cause pH change and material yellowing issues.
Ethylene propylene (EPDM) rubber	Rubber/plastic seals	X		Corrosion risk for LED.
Formaldehyde	Can be found in cleaners, mineral spirits, petroleum, paint or gasoline.	X		May cause material yellowing.
Gaskets (containing sulfur compounds)		X		Corrosion risk for LED.
Gasoline	Solvent	X		May soften and/or tarnish the silicone encapsulant/housing/lens.
General lubricants	Manufacturing materials	X		Delamination risk for the silicone encapsulant/housing/lens.
General surfactantse	Manufacturing materials	X		Delamination risk for the silicone encapsulant/housing/lens.
Glycol ethers	Solvent. Can be found in cleaners, mineral spirits, petroleum, paint or gasoline.	X		May cause silicone to become turbid and affect the light output.May cause encapsulation swelling/softening.
Halogenated hydrocarbons (containing F, Cl, Br elements)	Can be found in machine oil, lubricants, solder fluxes/pastes or flame retardants.	X		Corrosion risk for LED. May interact with silicones.
Hydrochloric acid	Can be found in cleaners and cutting fluids.	X		Corrosion risk for LED. May interact with silicones and phosphors.
Isophorone di-isocyanate	Can be found in coating/potting/casting materials, polyurethane.	X		Discoloration of encapsulant, housing material and lead frame as well as silicone degradation.
Lard/Oil	Oil/lubricant	X		May weaken adhesion. May cause encapsulation swelling. May interact with silicones.
Linseed oil/Oil	Oil/lubricant	X		May weaken adhesion. May cause encapsulation swelling. May interact with silicones.
Methyl ethyl ketone (MEK) solvent	Solvent. Can be found in cleaners, mineral spirits, petroleum, paint or gasoline.	X		May interact with silicones.
Methylated Spirits/Mineral spirits	Manufacturing materials	X		May weaken adhesion. May cause encapsulation swelling. May interact with silicones.

Material	Examples of applications	Effect on the LED packages		Examples for concerns regarding effects on the LED packages
		Critical	Non Critical	
Methyl isobutyl ketone (MIBK) solvent	Solvent. Can be found in cleaners, mineral spirits, petroleum, paint or gasoline.	X		May degrade the encapsulant and the housing material.
Mineral Oil Lubricants	Manufacturing materials	X		May weaken adhesion. May cause encapsulation swelling. May interact with silicones.
Mineral splits	Solvent	X		May interact with silicones. May cause encapsulation swelling
Neodecanoic acid glycidyl ester	Surface coating, Paint drrier	X		May cause silicone and housing material yellowing and silicone softening.
Nitric acid	Can be found in cleaners and cutting fluids	X		Corrosion risk for LED. May cause encapsulant and housing yellowing and phosphor degradation. May interact with silicones.
Outgassing aromatic hydrocarbons (e.g. toluene, benzene, xylene, etc.)	Solvent	X		May interact with silicone encapsulant.
Paints (containing sulfur compounds)		X		May cause silver-containing lead frame corrosion.
Perfluoro elastomers	Rubber/plastic seals	X		May interact with silicone encapsulant.
Petroleum oil	Petroleum oil	X		May cause material swelling and thus weaken the adhesion. May cause material yellowing and decrease the overall light output. May interact with silicones. May cause silver-containing lead frame corrosion.
Petroleum byproducts (containing sulfur compounds)	Can be found in exhaust	X		May cause silver-containing lead frame corrosion.
Phenyl mercuric neodecanoate	Can be found in coatings, adhesives, sealants or elastomers	X		May cause material swelling and thus weaken the adhesion. May cause material yellowing, lead frame staining and decrease the overall light output.
Phosphoric acid	Can be found in cleaners and cutting fluids.	X		Depending on concentration, temperature and exposure time to the housing material, silicone, phosphor or lead frame, degradation may occur.
Polynorbornene rubber	Rubber/plastic seals	X		Discoloration of the silicone and lead frame staining.
Polystyrene (GPPS)	Structural plastic	X		Discoloration of the silicone and lead frame staining.
Polysulphide rubber	Rubber/plastic seals	X		Lead frame discoloration/degradation
Polyurethane material	Adhesive, tape, plastic rubber, sealant, potting material	X		Improper curing of polyurethane may result in outgassing and silicone degradation issues. Properly cured polyurethane should not be critical.
Potassium hydroxide	Alkaline/Alkali. Can be found in detergents or cleaners.	X		Depending on concentration, temperature and exposure time to housing material, silicone, phosphor or lead frame, degradation may occur.
Release Agents (Oil, Wax, Solvent and Water based)	Manufacturing materials	X		Delamination risk for the silicone encapsulant/housing/lens.
Sealants (containing sulfur compounds)		X		May cause silver-containing lead frame corrosion.
Silicone	Sealants, adhesives, encapsulant, potting and coating resins	X	X	Depending on the silicone source, grade and curing condition, may cause package failure. Curing byproducts during silicone curing may cause package contamination. Electronics material grade with low ionic and impurity content is highly recommended.
Silicone oil	Oil/lubricant	X		May interact with silicones.
Sodium hydroxide	Alkaline/Alkali. Can be found in detergents or cleaners.	X		Depending on concentration, temperature and exposure time to housing material, silicone, phosphor and lead frame, degradation may occur.
Solder Flux Resin	PCB manufacturing	X	X	Excess solder flux resin could cause lead frame staining and corrosion risk for LED.
Styrene butadiene rubber	Rubber/plastic seals	X		May cause silicone and lead frame yellowing.
Sulfuric acid	Can be found in cleaners or cutting fluids.	X		Depending on concentration, temperature and exposure time to housing material, silicone, phosphor and lead frame, degradation may occur; potential corrosion risk.
Tetrachloromethane	Solvent	X		May soften and/or tarnish the silicone encapsulant/housing/lens.
Tetradecylamine	Can be found in detergents.	X		May soften and/or tarnish the silicone encapsulant/housing/lens.
Toluene	Solvent. Can be found in cleaners.	X		May interact with silicones.
Trimethylhexamethylenediamine	Hardener in coating/potting/casting/adhesive epoxy materials	X		Discoloration of encapsulant, housing material and lead frame may occur.
UV acrylic adhesives	Sealants and adhesives	X		Corrosion risk for LED.
Xylene	Solvent. Can be found in cleaners.	X		May interact with silicones.

Index

Art. / Acc.	Code	px n° pack	px n° pallet	pag.
Acc.5	991903-00	6	288	577
Acc.5	991904-00	6	288	577
Acc.5	991905-00	6		577
Acc.5	991906-00	6		577
Acc.5	991907-00	6		577
Acc.24	995771-00	5		260
Acc.24	995773-00	5		260
Acc.25	997930-00	5		270
Acc.26	995698-00	5		258
Acc.26	997931-00	5		270
Acc.27	997940-00	5		294
Acc.28	997941-00	1		294
Acc.29	997942-00	1		294
Acc.30	995691-00	5		161
Acc.30	997943-00			294
Acc.36	995696-00	5		168
Acc.36	995705-00	5		168
Acc.37	995706-00	10		161, 168
Acc.38	995695-00	1		168
Acc.38	995707-00	1		168
Acc.41	995506-00	2	20	197, 219
Acc.41	995508-00	2	20	197, 219
Acc.41	995509-00	2	20	219
Acc.41	995704-00			168
Acc.42	995504-00	2	20	219
Acc.44	995701-00			168
Acc.48	997706-00	1	20	600
Acc.49	997707-00	1	20	600
Acc.49	997802-00	1	20	572, 600
Acc.50	991216-00	1		576
Acc.54	995774-00	10		500
Acc.55	998098-00	10		500, 502
Acc.56	995727-00	10		504
Acc.59	997900-00	1	25	592, 260, 263
Acc.60	997901-00	1	15	592, 260
Acc.61	986512-00	1		374, 376, 622
Acc.63	986511-00	1		374, 376, 622
Acc.65	986507-00	1		374, 376, 622
Acc.66	995692-00	1		161, 185
Acc.69	995693-00	1		185
Acc.72	997910-00	1	102	600
Acc.74	997911-00	1	20	600
Acc.96	991217-00	4		352
Acc.96	991218-00	4		352
Acc.109	991309-00	1		419
Acc.109	991312-00	1		431
Acc.114	991330-00	1		359
Acc.115	991331-00	20		576
Acc.116	991332-00	10		359, 366, 370
Acc.118	991334-00	10		359, 370
Acc.119	991335-00	20		359, 363, 366
Acc.120	991336-00	20		359, 363, 366
Acc.121	99133500002264	20		326
Acc.164	998097-00	1		260, 592
Acc.179	997661-00	1		376
Acc.179	997663-00	1		371, 372
Acc.179	997665-00	1		371, 375
Acc.179	997666-00	1		376
Acc.186	995746-00	2		366
Acc.187	995747-00	2		366
Acc.188	995748-00	10		366
Acc.189	995749-00	1		366
Acc.189	995750-00	1		366
Acc.189	995751-00	1		366
Acc.189	995752-00	1		366
Acc.190	995753-00	5		366
Acc.197	995792-00	1		243, 294
Acc.197	995799-00	1		243, 294
Acc.198	995789-00	1		270, 294
Acc.199	995793-00	1		243, 294
Acc.200	998011-00	20		37
Acc.205	426941-00	1		568, 600
Acc.205	426948-00	1		568, 600
Acc.210	426950-00	1		598
Acc.210	426951-00	1		598
Acc.211	426952-00	1		598
Acc.211	426953-00	1		598
Acc.212	426954-00	1		599
Acc.212	426955-00	1		599
Acc.213	426956-00	1		599
Acc.213	426957-00	1		599
Acc.214	426958-00	1		599
Acc.214	426959-00	1		599
Acc.215	426960-00	1		599
Acc.222	991315-00	1		586
Acc.222	991378-00	1		580, 592
Acc.222	991381-00	1		580, 592
Acc.222	991399-00	1		586
Acc.223	991320-00	1		588, 590
Acc.223	991333-00	1		588, 590
Acc.224	998014-00	20		37
Acc.235	997927-00	1		258, 260
Acc.236	997926-00	1		258, 260
Acc.248	997708-00	1	20	568, 572, 600
Acc.248	997804-00	1	20	600
Acc.249	997803-00	1	20	572, 600
Acc.249	997805-00	1	20	600
Acc.286	991445-00	1		458
Acc.290	991438-00	1		490
Acc.290	991439-00	1		490
Art.291	330795-00	1	36	503
Art.291	330796-00	1	36	503
Art.291	330797-00	1	36	503
Acc.297	426448-00	1		487, 595
Acc.299	991314-00	1		582, 586, 588, 590, 592
Acc.299	991396-00	1		483, 485, 488, 578, 580, 582, 586, 592, 596
Acc.300	426970-00	1		599
Acc.300	426971-00	1		462, 599
Acc.301	426972-00	1		598
Acc.301	426973-00	1		462, 598
Acc.302	426975-00	1		462
Acc.303	426976-00	1		598
Acc.303	426977-00	1		598
Acc.304	426978-00	1		462, 598
Acc.305	426979-00	1		599
Acc.305	426980-00	1		599
Acc.306	145515-00	5		197
Acc.306	145516-00	5		197
Acc.306	145517-00	5		197
Acc.308	145521-00	12		382
Acc.313	993925-00	1		372, 623
Acc.314	993926-00	1		372, 623
Acc.315	995212-00	12		82
Acc.320	998004-00	100		4, 8, 11, 17, 20, 33, 34, 49
Acc.326	998059-00	20		27
Acc.327	426942-00	1		598
Acc.327	426943-00	1		598

Art. / Acc.	Code	px n° pack	px n° pallet	pag.
Acc.328	426944-00	1		598
Acc.328	426945-00	1		598
Acc.329	998003-00	10		478
Acc.333	997915-00	1		219, 227
Acc.333	997915-21	1		243, 251
Acc.334	997916-00	1		219, 227
Acc.339	993836-00	10		49, 201, 313, 556
Acc.339	993854-00	10		49, 199, 219, 572
Acc.345	995772-00	1		270
Acc.350	997902-00	5		227
Acc.350	997925-00	5		227
Acc.350	997928-00	5		227
Acc.364	998020-00	1		350
Acc.365	998022-00	1		350
Acc.366	998024-00	1		350
Acc.367	426997-00	4		578
Acc.367	426998-00	4		578
Acc.368	427002-00	1		590, 592
Acc.368	427003-00	1		590, 592
Acc.369	993838-00	10		377
Acc.376	145151-00	10		69, 313, 620
Acc.381	326503-00	1		598
Acc.384	995794-00	5		263
Acc.384	995795-00	5		263
Acc.394	995213-00	12		83
Acc.395	145081-00	1	44	69
Acc.395	145082-00	1	44	69
Acc.395	145090-00	1	44	69
Acc.395	145091-00	1	44	69
Acc.395	995713-00	10		161, 168
Acc.399	993837-00	10		377
Acc.401	420450-00	1		352
Acc.405	991385-00	1		568, 600
Art.420	214565-00	1		81
Art.420	214566-00	1	168	81
Art.420	214567-00	1	120	81
Art.430	215620-00	8		357
Art.430	215622-00	8		357
Art.430	215623-00	8		357
Acc.451	991250-00	8		355
Acc.451	991251-00	8		355
Acc.452	991252-00	4		355
Acc.452	991253-00	4		355
Acc.453	991254-00	4		355
Acc.453	991255-00	4		355
Acc.462	997933-00	5		251
Acc.462	997937-00	5		243
Acc.463	997934-00	1		251
Acc.463	997938-00	1		243
Acc.470	995150-00	1		85, 134, 149
Acc.470	995151-00	1		85, 134, 149
Acc.470	995152-00	1		85, 134, 149
Acc.471	991461-00	4		580
Acc.471	991462-00	4		580
Acc.472	995137-00	1		82
Acc.472	995138-00	1		82
Acc.472	995139-00	1		82
Acc.472	995144-00	1		82
Acc.472	995147-00	1		83
Acc.472	995148-00	1		83
Acc.472	995149-00	1		83
Acc.472	995153-00	1		83
Acc.473	997939-00	1		251
Acc.476	997944-00	1		243
Acc.482	995785-00	1		270
Acc.482	995786-00	1		270
Acc.482	995788-00	1		270
Acc.482	995790-00	1		294
Acc.482	995791-00	1		294
Acc.483	995796-00	1		294
Acc.484	995777-00	1		270, 294
Acc.484	995798-00	1		270, 294
Acc.485	995440-00	1		85
Acc.486	995441-00	1		85
Acc.487	995442-00	1		85
Acc.488	995797-00	1		270, 294
Acc.489	997903-00	1		270
Acc.490	995800-00	1		270, 294
Acc.502	991260-00	4		355
Acc.503	991261-00	4		355
Acc.504	991262-00	1		530, 540, 552, 556
Acc.504	991263-00	1		510, 522, 530, 540, 544, 548
Acc.508	991266-00	1		530, 540, 552, 556
Acc.508	991267-00	1		510, 522, 530, 540, 544, 548
Acc.510	991289-00			473
Acc.513	991290-00	1		488
Acc.513	991291-00	1		488
Acc.514	991280-00	1		484
Acc.515	991281-00	1		484
Acc.516	991282-00	1		484
Acc.517	991283-00	1		484
Acc.518	991284-00	1		478
Acc.519	991285-00	1		478
Acc.528	991288-00	1		484
Acc.528	991463-00	1		586, 588
Acc.529	991463-2118	1		586, 588
Acc.532	991292-00	1		488
Acc.532	991293-00	1		488
Acc.535	993970-00	5		313, 620
Acc.536	993972-00	5		313, 620
Acc.537	993974-00	1		313, 620
Acc.539	993990-00	5	40	184
Acc.539	993991-00	5	40	184
Acc.539	993992-00	5		184
Acc.539	993993-00	5		184
Acc.539	993994-00	5		184
Acc.541	993980-00	5		378
Acc.542	993981-00	5		378
Acc.543	993982-00	5		378
Acc.544	993983-00	5		378
Acc.545	993984-00	5		378
Acc.578	997709-00	1		548
Acc.588	993971-00	5		62
Acc.590	998115-00	1		40
Acc.595	998031-00	1		4
Acc.595	998032-00	1		4
Acc.595	998034-00	1		11
Acc.595	998035-00	1		8, 11, 20
Acc.595	998036-00	1		11
Acc.600	986604-00	1		5, 6, 7, 9, 12, 13, 14, 15, 17, 21, 22, 23, 25, 33, 34, 39, 40, 44, 46
Acc.600	986604-31	1		5, 6, 7, 9, 12, 13, 14, 15, 17, 21, 22, 23, 25, 33, 34, 39, 40, 44, 46
Art.601	115594-00	1	155	63
Art.601	115594-07	1	155	63

Index

Art. / Acc.	Code	px n° pack	px n° pallet	pag.
Art.601	115594-0041	1		63
Art.601	115595-00	1	86	63
Art.601	115595-07	1		63
Art.601	115595-0041	1		63
Art.601	115596-00	1	70	63
Art.601	115596-07	1	70	63
Art.601	115596-0041	1		63
Art.602	115597-00	1	140	63
Art.602	115597-07	1	140	63
Art.602	115598-00	1	70	63
Art.602	115598-07	1	70	63
Art.603	115520-00	1	144	65
Art.603	115520-19	1		65
Art.603	115520-0041	1	144	65
Art.603	115521-00	1	72	65
Art.603	115521-19	1		65
Art.603	115521-0041	1	72	65
Art.603	115522-00	1	72	65
Art.603	115522-19	1		65
Art.603	115522-0041	1	72	65
Art.604	115532-00	1	144	65
Art.604	115534-00	1	72	65
Art.604	115535-00	1	72	65
Art.605	115561-00	12		66
Acc.610	998037-00	1		45, 48
Art.621	112533-00	10	200	83
Art.621	112534-00	10	200	83
Art.621	112536-00	10	200	83
Art.622	112544-95001026	10		82
Art.623	112563-00	10	200	83
Art.623	112564-00	10	200	83
Art.623	112566-00	10	200	83
Art.624	112534-95001025	1		82
Acc.625	145518-00	5		197, 616
Acc.625	145519-00	5		197, 616
Acc.625	145520-00	5		197, 616
Art.628	112509-00	1		84
Art.629	112500-00	1		84
Art.630	112521-00	1	120	85
Art.731	143533-00	1	45	30
Art.731	143533-0041	1		30
Art.731	143534-00	1	38	31
Art.731	143534-0041	1		31
Art.731	143535-00	1	38	31
Art.731	143535-0041	1		31
Art.731	143536-00	1	38	30
Art.731	143536-0041	1		30
Art.731	143538-00	1	38	31
Art.731	143538-0041	1		31
Art.731	143539-00	1	38	31
Art.731	143539-0041	1		31
Art.733	143400-0041	1		73
Art.733	143401-0041	1		73
Art.733	143410-0041	1		73
Art.733	143411-0041	1		73
Art.733	143420-0041	1		73
Art.733	143421-0041	1		73
Art.733	143430-0041	1		73
Art.733	143431-0041	1		73
Art.745	112600-00	1	157	77
Art.745	112600-07	1	157	77
Art.745	112600-19	1		77
Art.745	112600-31	1		77
Art.745	112600-39	1	157	77
Art.745	112600-0041	1		77
Art.745	112600-0050	1		77
Art.745	112600-0728	1	157	77
Art.745	112600-1928	1		77
Art.745	112600-1957	1		77
Art.745	112600-3128	1		77
Art.745	112600-3941	1		77
Art.745	112600-3950	1		77
Art.745	112600-19573000	1		77
Art.745	112601-00	1	157	77
Art.745	112601-07	1	157	77
Art.745	112601-19	1		77
Art.745	112601-31	1		77
Art.745	112601-39	1	157	77
Art.745	112601-0041	1		77
Art.745	112601-0050	1		77
Art.745	112601-0728	1	157	77
Art.745	112601-1928	1		77
Art.745	112601-3128	1		77
Art.745	112601-3941	1		77
Art.745	112601-3950	1		77
Art.746	112626-00	1	408	75
Art.746	112626-39	1	408	75
Art.747	112636-00	1	216	75
Art.747	112636-19	1		75
Art.747	112636-39	1	216	75
Art.747	112636-1928	1		75
Art.748	112646-00	1	188	75
Art.748	112646-19	1		75
Art.748	112646-39	1	188	75
Art.748	112646-1928	1		75
Art.754	140212-00	1	30	35
Art.754	140212-0041	1		35
Art.754	140213-00	1	30	35
Art.754	140213-0041	1		35
Art.781	156304-00	1		78
Art.781	156304-0041	1		78
Art.810	150340-00	1	44	21
Art.810	150340-19	1		21
Art.810	150340-39	1		21
Art.810	150340-1928	1		21
Art.811	150350-00	1	44	21
Art.811	150350-19	1		21
Art.811	150350-39	1	44	21
Art.811	150350-1928	1		21
Art.814	150360-00			22
Art.814	150360-19			22
Art.814	150360-39			22
Art.814	150360-1928			22
Art.815	150370-00			23
Art.815	150370-19			23
Art.815	150370-39			23
Art.815	150370-1928			23
Art.816	150371-00	1	44	23
Art.816	150371-19	1		23
Art.816	150371-39	1	44	23
Art.816	150371-1928			23
Art.821	152084-00	1		51
Art.821	152084-0041	1		51
Art.830	150242-00	5	50	14
Art.830	150242-39	5	50	14
Art.830	150242-0041	6		14
Art.830	150242-3941	6		14
Art.830	150243-00	6	30	14
Art.830	150243-39	5	30	14

Art. / Acc.	Code	px n° pack	px n° pallet	pag.
Art.830	150243-0041	5		14
Art.830	150243-3941	5		14
Art.830	150244-00	1	23	14
Art.830	150245-00	6	48	14
Art.830	150245-0041	6		14
Art.830	150246-00	6	30	14
Art.830	150246-0041	6		14
Art.831	150232-00002264	5		17
Art.831	150232-00412264	5		17
Art.831	150232-39002264	5		17
Art.831	150232-39412264	5		17
Art.831	150237-00	5	30	17
Art.831	150237-0041	5		17
Art.832	150232-00	6	48	15
Art.832	150233-00	5	30	15
Art.832	150234-00	1	15	15
Art.832	150235-00	6	48	15
Art.832	150238-00	5	30	15
Art.833	150239-00	5		9
Art.833	150239-0041	5	50	9
Art.833	150240-00	5		9
Art.833	150240-39	5	50	9
Art.833	150240-0041	5		9
Art.833	150240-2121	5	50	9
Art.833	150240-2141	5	50	9
Art.833	150240-3941	5		9
Art.834	150252-00	5	50	12
Art.834	150252-0041	5		12
Art.834	150253-00	5	30	12
Art.834	150253-0041	5		12
Art.835	150260-00	5		13
Art.835	150260-0041	5		13
Art.835	150265-00	5	30	13
Art.835	150265-0041	5		13
Art.840	150208-00	6	96	6
Art.840	150208-39	6	96	6
Art.840	150208-0041	6		6
Art.840	150209-00	5	40	6
Art.840	150209-39	5	40	6
Art.840	150209-0041	5		6
Art.840	150211-00	5	50	6
Art.841	153533-00	1	45	28
Art.841	153533-0041	1		28
Art.841	153534-00	1	38	29
Art.841	153534-0041	1		29
Art.841	153535-00	1	38	29
Art.841	153535-0041	1		29
Art.841	153536-00	1	38	28
Art.841	153536-0041	1		28
Art.841	153537-00	1	19	28
Art.841	153537-0041	1		28
Art.841	153538-00	1	38	29
Art.841	153538-0041	1		29
Art.841	153539-00	1	38	29
Art.841	153539-0041	1		29
Art.842	150205-00	6	96	7
Art.842	150205-39	6	96	7
Art.842	150205-0041	6		7
Art.842	150205-3941	6		7
Art.842	150206-00	5	40	7
Art.842	150206-39	5	40	7
Art.842	150206-0041	5		7
Art.842	150206-3941	5		7
Art.843	152080-00	1	22	50
Art.843	152080-0041	1		50
Art.843	152081-00	1	18	50
Art.843	152081-0041	1		50
Art.844	150225-00	6	96	5
Art.844	150225-39	6	96	5
Art.844	150225-0041	6		5
Art.844	150227-00	5	40	5
Art.844	150227-39	5	40	5
Art.844	150227-0041	5		5
Art.846	152082-00	1	18	51
Art.846	152082-0041	1		51
Art.846	152083-00	1	22	51
Art.846	152083-0041	1		51
Art.847	150256-00	1	38	49
Art.847	150256-39	1	38	49
Art.847	150256-0041	1		49
Art.847	150256-3941	1		49
Art.847	150257-00	5	30	49
Art.847	150257-39	5	30	49
Art.847	150257-0041	5	30	49
Art.847	150257-3941	5	30	49
Art.848	153436-00	1	72	37
Art.848	153437-00	1	72	37
Art.848	153438-00	1	72	37
Art.854	150212-00	2	20	35
Art.854	150212-0041	1		35
Art.854	150213-00	2	20	35
Art.854	150213-0041	2		35
Art.870	156440-00	1		42
Art.871	156442-00	1		43
Art.872	156444-00	1		43
Art.882	156405-00	1		40
Art.882	156405-39	1		40
Art.883	156415-00	1		40
Art.883	156415-39	1		40
Art.884	156424-00	1		41
Art.884	156424-39	1		41
Art.884	156425-00	1		41
Art.884	156425-39	1		41
Art.885	156452-00	1	220	39
Art.885	156452-0041	1		39
Art.886	156465-00	1		41
Acc.898	998025-00	20		37
Acc.899	998027-00	20		37
Acc.905	998013-00	5		394, 620
Acc.907	998038-00	50		5, 6, 7, 8, 12, 13, 14, 15, 20
Art.910	156470-00	1		48
Art.910	156470-39	1		48
Art.910	156470-0041	1		48
Art.910	156470-3941	1		48
Art.910	156471-00	1		48
Art.910	156471-39	1		48
Art.910	156471-0041	1		48
Art.910	156471-3941	1		48
Art.911	156472-00	1		44
Art.911	156473-00	1		45
Art.911	156473-39	1		45
Art.911	156473-0041	1		45
Art.911	156473-3941	1		45
Art.911	156477-00	1		45
Art.911	156477-39	1		45
Art.911	156477-0041	1		45
Art.911	156477-3941	1		45
Art.912	156472-0041	1		44

Index

Art. / Acc.	Code	px n° pack	px n° pallet	pag.
Art.912	156478-00	1		46
Art.912	156478-0041	1		46
Art.912	156479-00	1		47
Art.912	156479-0041	1		47
Art.912	156480-00	1		47
Art.912	156480-0041	1		47
Art.916	114014-00	1	26	33
Art.916	114014-39	1	26	33
Art.916	114014-0041	1		33
Art.916	114014-3941	1		33
Art.921	164530-03	1	200	110
Art.921	164531-03	1	123	110
Art.921	164532-03	1	123	110
Art.921	164533-03	1		110
Art.921	164534-03	1	83	110
Art.921	164535-03	1	83	110
Art.927	164700-00	1	180	102
Art.927	164700-39	1		103
Art.927	164700-0050	1		102
Art.927	164700-0083	1	180	103
Art.927	164701-00	1	72	102
Art.927	164701-07	1	72	102
Art.927	164701-18	1		109
Art.927	164701-19	1		108
Art.927	164701-39	1	72	103
Art.927	164701-0041	1		102
Art.927	164701-0050	1		102
Art.927	164701-0083	1	72	103
Art.927	164701-0783	1	72	103
Art.927	164702-00	1	72	102
Art.927	164702-07	1	72	102
Art.927	164702-18	1		109
Art.927	164702-19	1		108
Art.927	164702-39	1	72	103
Art.927	164702-0041	1		102
Art.927	164702-0050	1		102
Art.927	164702-0083	1	72	103
Art.927	164702-0783	1	72	103
Art.927	164703-00	1	108	102
Art.927	164703-07	1	108	102
Art.927	164703-18	1		109
Art.927	164703-19	1		108
Art.927	164703-39	1	108	103
Art.927	164703-0041	1		102
Art.927	164703-0050	1		102
Art.927	164703-0083	1	108	103
Art.927	164703-0783	1	108	103
Art.927	164704-00	1	60	102
Art.927	164704-07	1	60	102
Art.927	164704-18	1		109
Art.927	164704-19	1		108
Art.927	164704-22	1		107
Art.927	164704-39	1	60	103
Art.927	164704-0041	1		102
Art.927	164704-0050	1		102
Art.927	164704-0083	1	60	103
Art.927	164704-0783	1	60	103
Art.927	164705-00	1	60	102
Art.927	164705-07	1	60	102
Art.927	164705-18	1		109
Art.927	164705-19	1		108
Art.927	164705-22	1		107
Art.927	164705-39	1	60	103
Art.927	164705-0041	1		102
Art.927	164705-0050	1		102
Art.927	164705-0083	1	60	103
Art.927	164705-0783	1	60	103
Art.927	164796-00	1	60	119
Art.927	164796-07	1		119
Art.927	164797-00	1	60	119
Art.927	164797-07	1		119
Art.927	164798-00	1	60	119
Art.927	164798-07	1		119
Art.927	164799-00	1	60	119
Art.927	164799-07	1		119
Acc.938	998073-00	50		90, 93, 96, 101
Art.957	164711-00	1	72	105
Art.957	164711-07	1	72	105
Art.957	164711-0050	1		105
Art.957	164712-00	1	72	105
Art.957	164712-07	1	72	105
Art.957	164712-0050	1		105
Art.957	164714-00	1	60	105
Art.957	164714-07	1	60	105
Art.957	164714-22	1		107
Art.957	164714-0041	1		105
Art.957	164714-0050	1		105
Art.957	164715-00	1	60	105
Art.957	164715-07	1	60	105
Art.957	164715-22	1		107
Art.957	164715-0041	1		105
Art.957	164715-0050	1		105
Art.957	164717-00	1	60	105
Art.957	164717-07	1	60	105
Art.957	164717-0041	1		105
Art.957	164717-0050	1		105
Art.957	164718-00	1	60	105
Art.957	164718-07	1	60	105
Art.957	164718-0041	1		105
Art.957	164718-0050	1		105
Art.957	164730-00	1	72	106
Art.957	164730-07	1	72	106
Art.957	164730-0041	1		106
Art.957	164730-0050	1		106
Art.957	164733-00	1	180	106
Art.957	164733-0050	1		106
Art.957	164736-00	1	72	106
Art.957	164736-07	1	72	106
Art.957	164736-0041	1		106
Art.957	164736-0050	1	72	106
Art.957	164737-00	1	72	106
Art.957	164737-0050	1	72	106
Art.957	164748-00	1	72	106
Art.957	164748-0041	1		106
Art.957	164748-0050	1		106
Art.957	164749-00	1	72	106
Art.957	164749-0041	1	72	106
Art.957	164749-0050	1		106
Art.958	164550-00	1	60	104
Art.958	164550-0041	1		104
Art.958	164550-0050	1		104
Art.958	164551-00	1	60	104
Art.958	164551-0041	1		104
Art.958	164551-0050	1		104
Art.958	164552-00	1	60	104
Art.958	164552-0041	1		104
Art.958	164552-0050	1		104
Art.960	164751-00	1	70	97
Art.960	164752-00	1	70	97

Art. / Acc.	Code	px n° pack	px n° pallet	pag.
Art.960	164754-00	1	70	97
Art.960	164755-00	1	70	97
Art.963	164762-00	1	70	94
Art.963	164762-07	1	70	94
Art.963	164762-0041	1		94
Art.963	164762-0050	1		94
Art.963	164763-00	1	70	94
Art.963	164763-07	1	70	94
Art.963	164763-0041	1		94
Art.963	164763-0050	1		94
Art.963	164764-00	1	70	94
Art.963	164764-07	1	70	94
Art.963	164764-22	1		95
Art.963	164764-0041	1		94
Art.963	164764-0050	1		94
Art.963	164765-00	1	70	94
Art.963	164765-07	1	70	94
Art.963	164765-22	1		95
Art.963	164765-0041	1		94
Art.963	164765-0050	1		94
Art.963	164766-00	1	70	94
Art.963	164766-07	1		94
Art.963	164766-0041	1		94
Art.963	164766-0050	1		94
Art.965	164780-00	1	70	95
Art.965	164781-00	1	70	95
Art.966	164813-00	1	209	113
Art.966	164813-07	1	209	113
Art.966	164813-0041	1		113
Art.966	164814-00	1	132	113
Art.966	164814-07	1	132	113
Art.966	164814-0041	1		113
Art.966	164815-00	1	132	113
Art.966	164815-07	1	132	113
Art.966	164815-0041	1		113
Art.966	164816-00	1	66	113
Art.966	164816-07	1		113
Art.966	164816-0041	1		113
Art.966	164817-00	1	66	113
Art.966	164817-07	1		113
Art.966	164817-0041	1		113
Art.970	164731-00	1	70	91
Art.970	164731-07	1	70	91
Art.970	164731-0041	1		91
Art.970	164732-00	1	70	91
Art.970	164732-07	1	70	91
Art.970	164732-0041	1		91
Art.970	164734-00	1	70	91
Art.970	164734-07	1	70	91
Art.970	164734-0041	1		91
Art.970	164734-0072	1		91
Art.970	164735-00	1	70	91
Art.970	164735-07	1	70	91
Art.970	164735-0041	1		91
Art.970	164735-0072	1		91
Art.971	164770-00	1	99	89
Art.971	164770-07	1	99	89
Art.971	164770-0041	1		89
Art.971	164770-0050	1		89
Art.971	164772-00	1	99	89
Art.971	164772-07	1	99	89
Art.971	164772-0041	1		89
Art.971	164772-0050	1	99	89
Art.971	164774-00	1	99	89
Art.971	164774-07	1	99	89
Art.971	164774-0041	1		89
Art.971	164774-0050	1		89
Art.971	164777-00	1	99	89
Art.971	164777-07	1	99	89
Art.971	164777-0041	1		89
Art.971	164777-0050	1		89
Art.971	164778-00	1	99	89
Art.971	164778-07	1	99	89
Art.971	164778-0041	1		89
Art.971	164778-0050	1	99	89
Art.972	164782-00	6	144	99
Art.972	164782-37	6	144	99
Art.972	164782-39	6	144	99
Art.972	164783-00	6	90	99
Art.972	164783-37	6	90	99
Art.972	164783-39	6	90	99
Art.972	164783-0041	6		99
Art.972	164784-00	6	90	99
Art.972	164784-37	6	90	99
Art.972	164784-39	6	90	99
Art.972	164784-0041	6		99
Art.973	164792-00	6	90	98
Acc.975	165564-00	1	50	90, 93, 96, 101
Acc.975	165565-00	1	50	88, 101
Acc.975	165566-00	1	50	114
Acc.975	165567-00	1	50	114
Art.976	162430-00	1	40	117
Art.976	162431-00	1	40	117
Art.976	162432-00	1	40	117
Art.976	162433-00	1	40	117
Art.977	162470-00	1	40	117
Art.977	162471-00	1	40	117
Art.977	162472-00	1	40	117
Art.977	162473-00	1	40	117
Acc.978	998078-00	10	500	88, 90, 93, 96, 101, 112
Art.979	164800-00	1		111
Art.979	164801-00	1		111
Art.979	164802-00	1		111
Art.983	162465-00	1	40	116
Art.983	162465-65	1		635
Art.983	162466-00	1	40	116
Art.983	162466-65	1		635
Art.983	162467-00	1	40	116
Art.983	162468-00	1	40	116
Art.988	162485-00	1	40	114
Art.988	162486-00	1	40	114
Art.993	162447-00	1	40	115
Art.993	162448-00	1	40	115
Art.993	162457-00	1	40	115
Art.993	162458-00	1	40	115
Art.993	162495-00	1	45	120
Art.993	162496-00	1	45	120
Art.993	162497-00	1	45	120
Art.993	162498-00	1	45	120
Art.995	162445-00	1	40	115
Art.995	162446-00	1	40	115
Art.995	162455-00	1	40	115
Art.995	162456-00	1	40	115
Art.997	162400-00	1	40	116
Art.997	162401-00	1	40	116
Art.997	162402-00	1	40	116
Art.997	162403-00	1	40	116
Art.1105	321565-00	1	42	71

Index

Art. / Acc.	Code	px n° pack	px n° pallet	pag.
Acc.1122	321012-00	2	44	192
Art.1141	412000-00	4	144	211
Art.1141	412000-0035			211
Art.1141	412000-39	4		211
Art.1142	412005-00	4	144	211
Art.1142	412005-0035			211
Art.1142	412005-39	4		211
Art.1143	412010-00	2	96	212
Art.1143	412010-0035	2	96	212
Art.1143	412010-39	2		212
Art.1144	412015-00	2	96	212
Art.1144	412015-0035	2		212
Art.1144	412015-39	2		212
Art.1145	412020-00	2	96	213
Art.1145	412020-0035	2		213
Art.1145	412020-39	2		213
Art.1146	412025-00	2	96	213
Art.1146	412025-0035	2		213
Art.1146	412025-39	2		213
Art.1147	412030-00	2	96	215
Art.1148	412040-00	2	72	217
Art.1148	412040-0035	2		217
Art.1148	412040-39	2		217
Art.1149	412045-00	2	72	217
Art.1149	412045-0035	2		217
Art.1149	412045-39	2		217
Art.1153	313148-00	1		573
Art.1153	313148-39	1		573
Art.1154	313149-00	1		573
Art.1154	313149-39	1		573
Art.1172	322652-00	1	6	192
Art.1172	322653-00	1	6	192
Acc.1175	986605-00	1		182, 185, 187
Art.1203	431625-00	1		387
Art.1204	431627-00	1		387
Art.1205	422140-00	1	12	498
Art.1205	422140-39	1	12	498
Art.1205	422141-00	1	12	498
Art.1205	422141-39	1	12	498
Art.1206	431001-00	1	200	390
Art.1207	431501-00	1	200	391
Art.1208	431601-00	1	200	391
Art.1209	431002-00	1		390
Art.1210	431502-00	1		391
Art.1211	431602-00	1		391
Art.1212	431603-00	1		391
Art.1213	431610-00	1		382
Art.1213	431610-39	1		382
Art.1213	431611-00	1		382
Art.1213	431611-39	1		382
Art.1214	431613-00	1		382
Art.1215	431615-00	1		382
Art.1216	431617-00	1		383
Art.1217	431619-00	1		383
Art.1218	431623-00	1		386
Art.1219	431624-00	1		386
Art.1220	431801-00	10	240	370
Art.1221	411090-00	1	16	254
Art.1221	411090-0035	1	16	254
Art.1221	411090-39	1	16	254
Art.1221	411091-00	1	16	254
Art.1221	411091-0035	1		254
Art.1221	411091-39	1	16	254
Art.1222	411070-00	1	16	252
Art.1222	411070-0035	1	16	252
Art.1222	411070-39	1	16	252
Art.1222	411071-00	1	16	252
Art.1222	411071-0035	1	16	252
Art.1222	411071-39	1	16	252
Art.1222	411080-00	1	16	252
Art.1223	411080-0035	1	16	252
Art.1223	411080-39	1	16	252
Art.1223	411081-00	1	16	252
Art.1223	411081-0035	1	16	252
Art.1223	411081-39	1	16	252
Art.1224	411000-00	1	16	253
Art.1224	411000-0035	1		253
Art.1224	411000-39	1	16	253
Art.1224	411001-00	1	16	253
Art.1224	411001-0035	1		253
Art.1224	411001-39	1	16	253
Art.1225	411010-00	1	16	253
Art.1225	411010-0035	1		253
Art.1225	411010-39	1		253
Art.1225	411011-00	1	16	253
Art.1225	411011-0035	1		253
Art.1225	411011-39	1		253
Art.1226	411020-00	1	16	255
Art.1226	411020-0035	1	16	255
Art.1226	411020-39	1		255
Art.1226	411021-00	1	16	255
Art.1226	411021-0035	1		255
Art.1226	411021-39	1	16	255
Art.1227	411030-00	1	16	255
Art.1227	411030-0035	1		255
Art.1227	411030-39	1		255
Art.1227	411031-00	1	16	255
Art.1227	411031-0035	1		255
Art.1227	411031-39	1	16	255
Art.1228	411050-00	1	16	257
Art.1228	411050-0035	1		257
Art.1228	411050-39	1	16	257
Art.1228	411051-00	1	16	257
Art.1228	411051-0035	1		257
Art.1228	411051-39	1	16	257
Art.1229	411060-00	1	16	257
Art.1229	411060-0035	1	16	257
Art.1229	411060-39	1		257
Art.1229	411061-00	1	16	257
Art.1229	411061-0035	1		257
Art.1229	411061-39	1	16	257
Art.1230	510005-00	1	16	333
Art.1230	510005-39	1	16	333
Art.1232	510006-00	1	32	333
Art.1232	510006-39	1	32	333
Art.1238	510600-00	1	32	333
Art.1238	510600-39	1	32	333
Art.1239	510610-00	1	16	333
Art.1239	510610-39	1	16	333
Art.1240	427810-00	1	48	452
Art.1240	427810-39	1	48	452
Art.1240	427811-00	1	48	452
Art.1240	427811-39	1	48	452
Art.1241	427820-00	1	48	453
Art.1241	427820-39	1	48	453
Art.1241	427821-00	1	48	453
Art.1241	427821-39	1	48	453
Art.1242	427830-00	1	48	453
Art.1242	427830-39	1	48	453

Art. / Acc.	Code	px n° pack	px n° pallet	pag.
Art.1242	427831-00	1	48	453
Art.1242	427831-39	1	48	453
Art.1243	427840-00	1		454
Art.1243	427840-39	1		454
Art.1243	427841-00	1		454
Art.1243	427841-39	1		454
Art.1243	427842-00	1		454
Art.1243	427842-39	1		454
Art.1244	427850-00	1		454
Art.1244	427850-39	1		454
Art.1244	427851-00	1		454
Art.1244	427851-39	1		454
Art.1244	427852-00	1		454
Art.1244	427852-39	1		454
Art.1244	427853-00	1		454
Art.1244	427853-39	1		454
Art.1245	427870-00	1	48	455
Art.1245	427870-39	1	48	455
Art.1245	427871-00	1	48	455
Art.1245	427871-39	1	48	455
Art.1245	427872-00	1	48	455
Art.1245	427872-39	1	48	455
Art.1245	427873-00	1	48	455
Art.1245	427873-39	1	48	455
Art.1246	427867-00	1	48	455
Art.1246	427867-39	1	48	455
Art.1246	427868-00	1	48	455
Art.1246	427868-39	1	48	455
Art.1252	410900-00	1	50	246
Art.1252	410900-0035	1	50	246
Art.1252	410900-39	1	50	246
Art.1253	410910-00	1	50	246
Art.1253	410910-0035	1	50	246
Art.1253	410910-39	1	50	246
Art.1254	410920-00	1	50	247
Art.1254	410920-0035	1	50	247
Art.1254	410920-39	1	50	247
Art.1255	410930-00	1	50	247
Art.1255	410930-0035	1	50	247
Art.1255	410930-39	1	50	247
Art.1256	410940-00	1	50	244
Art.1256	410940-0035	1	50	244
Art.1256	410940-39	1	50	244
Art.1257	410950-00	1	50	244
Art.1257	410950-0035	1	50	244
Art.1257	410950-39	1	50	244
Art.1258	410960-00	1	50	245
Art.1258	410960-0035	1	50	245
Art.1258	410960-39	1	50	245
Art.1259	410970-00	1	50	245
Art.1259	410970-0035	1	50	245
Art.1259	410970-39	1	50	245
Art.1260	420690-00	1	120	354
Art.1260	420691-00	1	120	354
Art.1260	420691-07	1	120	354
Art.1260	420691-19	1		354
Art.1264	420665-00	1	96	353
Art.1264	420665-07	1		353
Art.1264	420666-00	1	96	353
Art.1264	420666-07	1		353
Art.1264	420669-00	1	96	353
Acc.1266	420915-00	10		353
Acc.1266	420916-00	10		353
Acc.1266	420917-00	10		354
Art.1270	215630-00	6		356
Art.1270	215631-00	6		356
Art.1270	215633-00	6		356
Art.1275	428605-00	1	95	355
Acc.1278	428617-00	1		577
Acc.1278	428618-00	1		577
Acc.1278	428619-00	1		577
Art.1280	420845-00	1	84	355
Art.1280	420846-00	1	84	355
Art.1281	411100-00	1	50	248
Art.1281	411100-0035	1	50	248
Art.1281	411100-39	1	50	248
Art.1282	423095-00	1	36	352
Art.1282	423096-00	1	36	352
Art.1282	423097-00	1	36	352
Art.1282	423099-00	1	36	352
Art.1283	411110-00	1	50	248
Art.1283	411110-0035	1	50	248
Art.1283	411110-39	1	50	248
Art.1284	411120-00	1	50	249
Art.1284	411120-0035	1	50	249
Art.1284	411120-39	1	50	249
Art.1285	411130-00	1	50	249
Art.1285	411130-0035	1	50	249
Art.1285	411130-39	1	50	249
Art.1293	420410-00	1	54	352
Art.1293	420410-73	1		352
Art.1293	420427-00	1	54	352
Art.1315	431650-00	1		384
Art.1316	431652-00	1		384
Art.1317	431660-00	1		385
Art.1318	431662-00	1		385
Art.1335	425600-00	1	12	341
Art.1335	425600-39	1	12	341
Art.1335	425601-00	1	12	341
Art.1335	425601-39	1	12	341
Acc.1408	426324-00	1		579
Acc.1408	426325-00	1		579
Acc.1408	426326-00	1		579
Acc.1408	426337-00	1		579
Acc.1408	426338-00	1		579
Acc.1408	426339-00	1		579
Acc.1409	426327-00	1		579
Acc.1409	426328-00	1		579
Acc.1409	426329-00	1		579
Acc.1409	426334-00	1		579
Acc.1409	426335-00	1		579
Acc.1409	426336-00	1		579
Acc.1410	425220-00	1		483
Acc.1411	425230-00	1		483
Acc.1415	426740-00	1		591
Acc.1415	426741-00	1		591
Acc.1415	426742-00	1		591
Acc.1415	426743-00	1		591
Acc.1416	426750-00	1		591
Acc.1416	426751-00	1		591
Acc.1416	426752-00	1		591
Acc.1416	426753-00	1		591
Acc.1417	426760-00	1		589
Acc.1417	426761-00	1		589
Acc.1417	426762-00	1		589
Acc.1417	426763-00	1		589
Acc.1417	426764-00	1		589
Acc.1417	426765-00	1		589
Acc.1418	426770-00	1		589

Index

Art. / Acc.	Code	px n° pack	px n° pallet	pag.
Acc.1418	426771-00	1		589
Acc.1418	426772-00	1		589
Acc.1418	426773-00	1		589
Acc.1418	426774-00	1		589
Acc.1418	426775-00	1		589
Acc.1420	425320-00	1		485
Acc.1420	425321-00	1		485
Acc.1421	425330-00	1		485
Acc.1421	425331-00	1		485
Acc.1440	425276-00	1		488
Acc.1440	425277-00	1		488
Acc.1441	425266-00	1		488
Acc.1441	425267-00	1		488
Acc.1477	425360-00	1		585
Acc.1477	425361-00	1		585
Acc.1477	425362-00	1		585
Acc.1477	425363-00	1		585
Acc.1477	425364-00	1		585
Acc.1478	425370-00	1		585
Acc.1478	425371-00	1		585
Acc.1478	425372-00	1		585
Acc.1478	425373-00	1		585
Acc.1478	425374-00	1		585
Acc.1480	425050-00	1		583
Acc.1480	425051-00	1		583
Acc.1480	425052-00	1		583
Acc.1480	425053-00	1		583
Acc.1480	425054-00	1		583
Acc.1480	425055-00	1		583
Acc.1480	425056-00	1		583
Acc.1480	425057-00	1		583
Acc.1480	425058-00	1		583
Acc.1480	425059-00	1		583
Acc.1480	425067-00	1		583
Acc.1480	425068-00	1		583
Acc.1480	425072-00	1		583
Acc.1480	425073-00	1		583
Acc.1480	425086-00	1		583
Acc.1480	425087-00	1		583
Acc.1480	425088-00	1		583
Acc.1480	425089-00	1		583
Acc.1481	425150-00	1		583
Acc.1481	425151-00	1		583
Acc.1481	425152-00	1		583
Acc.1481	425153-00	1		583
Acc.1481	425154-00	1		583
Acc.1481	425155-00	1		583
Acc.1481	425156-00	1		583
Acc.1481	425157-00	1		583
Acc.1481	425158-00	1		583
Acc.1481	425159-00	1		583
Acc.1481	425160-00	1		583
Acc.1481	425161-00	1		583
Acc.1481	425162-00	1		583
Acc.1481	425163-00	1		583
Acc.1481	425164-00	1		583
Acc.1481	425165-00	1		583
Acc.1481	425167-00	1		583
Acc.1481	425168-00	1		583
Acc.1485	425070-00	1		587
Acc.1485	425074-00	1		587
Acc.1485	425075-00	1		587
Acc.1487	425060-00	1		587
Acc.1487	425064-00	1		587
Acc.1487	425065-00	1		587
Acc.1487	425065-2118	1		587
Acc.1490	425080-00	1		597
Acc.1490	425081-00	1		597
Acc.1490	425082-00	1		597
Acc.1491	426149-00	1		593
Acc.1491	426153-00	1		593
Acc.1491	426159-00	1		593
Acc.1491	426177-00	1		593
Acc.1491	426178-00	1		593
Acc.1491	426179-00	1		593
Acc.1493	426187-00	1		593
Acc.1493	426188-00	1		593
Acc.1493	426189-00	1		593
Acc.1493	426197-00	1		593
Acc.1493	426198-00	1		593
Acc.1493	426199-00	1		593
Acc.1498	425200-00	1		595
Acc.1498	425202-00	1		595
Acc.1498	425203-00	1		487
Acc.1498	425204-00	1		487
Acc.1508	426362-00	1		581
Acc.1508	426363-00	1		581
Acc.1508	426364-00	1		581
Acc.1508	426377-00	1		581
Acc.1508	426378-00	1		581
Acc.1508	426379-00	1		581
Acc.1509	426366-00	1		581
Acc.1509	426367-00	1		581
Acc.1509	426368-00	1		581
Acc.1509	426369-00	1		581
Acc.1509	426373-00	1		581
Acc.1509	426374-00	1		581
Acc.1509	426375-00	1		581
Acc.1509	426376-00	1		581
Art.1513	423250-00	1	6	495
Art.1513	423250-0016	1	6	495
Art.1513	423250-39	1	6	495
Art.1513	423251-00	1	6	495
Art.1513	423251-0016	1	6	495
Art.1513	423251-39	1	6	495
Art.1515	422390-73	1		367
Art.1515	422391-73	1		367
Art.1515	422392-73	1		367
Art.1515	422393-73	1		367
Art.1515	432836-00	1	48	367
Art.1515	432836-73	1		367
Art.1515	432837-00	1	48	367
Art.1515	432837-73	1		367
Art.1517	422370-00	1	12	499
Art.1517	422370-39	1	12	499
Art.1517	422371-00	1	12	499
Art.1517	422371-39	1	12	499
Art.1517	422372-00	1	12	499
Art.1517	422372-39	1	12	499
Art.1517	422373-00	1	12	499
Art.1517	422373-39	1	12	499
Art.1518	422380-00	1	12	499
Art.1518	422381-00	1	12	499
Art.1523	432835-00	1	28	369
Art.1531	510060-00	1	35	336
Art.1533	510260-00	1	57	336
Art.1535	510460-00	1	100	336
Art.1537	431802-00	1	200	359
Art.1537	431803-00	1	200	359

Art. / Acc.	Code	px n° pack	px n° pallet	pag.
Art.1537	431815-00	1	200	359
Art.1537	431824-00	1	200	359
Art.1537	431828-00	1		359
Art.1537	431828-68	1		359
Art.1537	431829-00	1		359
Art.1537	431829-68	1		359
Art.1539	432834-00	1		369, 619
Art.1544	427246-00	1	108	80
Art.1547	420561-00	1	100	351
Art.1547	420562-00	1	100	351
Art.1550	420583-00	1	50	351
Art.1550	420584-00	1	50	351
Art.1550	420590-00	1	50	351
Art.1550	420592-00	1	50	351
Art.1554	420588-00	1	50	351
Art.1554	420589-00	1	50	351
Art.1554	420598-00	1	50	351
Art.1554	420599-00	1	50	351
Art.1556	420600-00	1	152	346
Art.1556	420600-68	1		346
Art.1556	420601-00	1	152	346
Art.1556	420601-68	1		346
Art.1556	420602-00	1	152	346
Art.1556	420602-68	1		346
Art.1557	420610-00	1	152	347
Art.1557	420610-68	1		347
Art.1557	420611-00	1	152	347
Art.1557	420611-68	1		347
Art.1557	420612-00	1	152	347
Art.1557	420612-68	1		347
Art.1558	420620-00	1	152	347
Art.1558	420620-68	1		347
Art.1558	420621-00	1	152	347
Art.1558	420621-68	1		347
Art.1558	420622-00	1	152	347
Art.1558	420622-68	1		347
Art.1561	422398-00	1	48	368
Art.1564	422394-73	1		367
Art.1564	422395-73	1		367
Art.1564	422396-73	1		367
Art.1564	422397-73	1		367
Art.1564	432838-00	1	48	367
Art.1564	432838-73	1		367
Art.1564	432839-00	1	48	367
Art.1564	432839-73	1		367
Art.1570	422400-00	1	12	499
Art.1570	422400-0016	1	12	499
Art.1570	422400-39	1	12	499
Art.1570	422401-00	1	12	499
Art.1570	422401-0016	1	12	499
Art.1570	422401-39	1	12	499
Art.1570	422403-00	1	12	499
Art.1570	422403-39	1	12	499
Art.1570	422404-00	1	12	499
Art.1570	422404-39	1	12	499
Art.1574	420631-00	1	108	342
Art.1574	420631-73	1		342
Art.1574	420632-00	1	108	342
Art.1574	420632-73	1		342
Art.1574	420634-00	1	108	342
Art.1574	420635-00	1	108	342
Art.1576	420641-00	1	108	343
Art.1576	420642-00	1	108	343
Art.1576	420644-00	1	108	343
Art.1576	420645-00	1	108	343
Art.1576	420646-00	1	108	343
Art.1576	420647-00	1	108	343
Art.1576	420648-00	1	108	343
Art.1576	420649-00	1	108	343
Art.1577	420651-00	1	108	343
Art.1577	420652-00	1	108	343
Art.1577	420654-00	1	108	343
Art.1577	420655-00	1	108	343
Art.1577	420656-00	1	108	343
Art.1577	420657-00	1	108	343
Art.1577	420658-00	1	108	343
Art.1577	420659-00	1	108	343
Art.1583	422212-00	1	2	497
Art.1583	422212-0016	1		497
Art.1583	422212-73	1		497
Art.1583	422213-00	1	2	497
Art.1583	422213-0016	1		497
Art.1583	422213-73	1		497
Art.1583	422304-00	1	2	497
Art.1583	422304-39	1	2	497
Art.1585	422305-00	1		403
Art.1589	330505-00	1	8	449
Art.1589	330506-00	1	8	449
Art.1589	330508-00	1		448
Art.1590	330500-00	1	8	449
Art.1590	330500-00002431	1		449
Art.1590	330509-00	1		448
Art.1591	420682-00	24	432	345
Art.1591	420682-2122	24	432	345
Art.1592	420683-00	24	432	345
Art.1592	420683-2122	24	432	345
Art.1593	420664-00	24	432	349
Art.1593	420664-2122	24	432	349
Art.1594	420674-00	12	144	348
Art.1594	420674-2122	12		348
Art.1595	420675-00	12	432	344
Art.1595	420676-00	12	432	344
Art.1596	422306-00	1		402
Art.1597	420677-00	12	144	348
Art.1597	420677-2122	12	144	348
Art.1598	422315-00	1		402
Art.1599	422316-00	1		403
Art.1606	431635-00	1		389
Art.1607	431735-00	1		388
Art.1609	431770-00	1		388
Art.1622	530690-00	6		371
Art.1622	530691-00	6		371
Art.1626	431640-00	1	120	389
Art.1634	530815-00	1		375
Art.1634	530817-00	1		375
Art.1635	530800-00	1		374, 623
Art.1637	530770-00	6		371
Art.1637	530771-00	6		371
Art.1638	530870-00	6		371
Art.1638	530871-00	6		371
Art.1650	530810-00	1		372
Art.1661	530816-00	1		373
Art.1670	530710-00	1		373
Art.1673	530696-00	6		392
Art.1673	530697-00	6		392
Art.1675	530672-00	1		393
Art.1676	530683-00	1		393
Art.1680	530408-00	1	40	381
Art.1680	530408-73	1	40	381

Index

Art. / Acc.	Code	px n° pack	px n° pallet	pag.
Art.1681	530418-00	1	40	381
Art.1681	530418-73	1	40	381
Art.1684	530401-00	1	40	380
Art.1684	530401-39	1	40	380
Art.1685	530407-00	1	40	379
Art.1685	530407-73	1		379
Art.1686	530417-00	1	40	379
Art.1686	530417-73	1		379
Art.1687	530427-00	1	40	379
Art.1687	530427-73	1		379
Art.1688	530437-00	1	40	379
Art.1688	530437-73	1		379
Art.1689	530540-00	1		380, 621
Art.1700	412960-00	1	350	198
Art.1700	412960-39	1		198
Art.1700	412962-00	1	350	198
Art.1700	412962-19	1	350	198
Art.1700	412962-39	1		198
Art.1700	412963-00	1	350	198
Art.1700	412963-39	1	350	198
Art.1700	412964-00	1	350	198
Art.1700	412964-19	1	350	198
Art.1700	412964-39	1	350	198
Art.1701	412970-00	1	350	199
Art.1701	412970-39	1		199
Art.1701	412971-00	1	350	199
Art.1701	412971-39	1		199
Art.1702	412975-00	1	350	199
Art.1702	412975-39	1		199
Art.1702	412976-00	1	350	199
Art.1702	412976-39	1		199
Art.1703	412980-00	1	350	199
Art.1703	412980-39	1		199
Art.1703	412981-00	1	350	199
Art.1703	412981-39	1		199
Art.1707	423252-00	1	6	495
Art.1707	423252-39	1	6	495
Art.1707	423253-00	1	6	495
Art.1707	423253-39	1	6	495
Art.1708	423255-00	1	6	495
Art.1708	423256-00	1	6	495
Art.1710	413000-00	1	114	200
Art.1710	413000-73	1		200
Art.1710	413001-00	1	114	200
Art.1710	413001-73	1		200
Art.1710	413002-00	1	114	200
Art.1710	413002-73	1		200
Art.1710	413003-00	1	114	200
Art.1710	413003-73	1		200
Art.1710	413050-00	1	114	200
Art.1710	413050-73	1		200
Art.1710	413051-00	1	114	200
Art.1710	413051-73	1		200
Art.1710	413052-00	1	114	200
Art.1710	413053-00	1	114	200
Art.1710	413054-00	1	114	200
Art.1710	413054-73	1		200
Art.1710	413055-00	1	114	200
Art.1710	413056-00	1	114	200
Art.1710	413056-73	1		200
Art.1710	413057-00	1	114	200
Art.1711	413010-00	1	114	201
Art.1711	413010-39	1	114	201
Art.1711	413011-00	1	114	201
Art.1711	413011-39	1	114	201
Art.1711	413012-00	1	114	201
Art.1711	413012-39	1		201
Art.1712	413020-00	1	114	201
Art.1712	413020-39	1	114	201
Art.1712	413021-00	1	114	201
Art.1712	413021-39	1	114	201
Art.1712	413022-00	1	114	201
Art.1712	413022-39	1	114	201
Art.1713	413030-00	1	93	203
Art.1713	413030-39	1	93	203
Art.1713	413031-00	1	93	203
Art.1713	413031-39	1	93	203
Art.1714	413040-00	1	93	203
Art.1714	413040-39	1	93	203
Art.1714	413041-00	1		203
Art.1714	413041-39	1		203
Art.1715	413060-73	1		202
Art.1715	413061-73	1		202
Art.1715	413062-00	1	93	202
Art.1715	413062-39	1	93	202
Art.1715	413063-00	1	93	202
Art.1715	413063-39	1	93	202
Art.1715	413064-00	1	93	202
Art.1715	413064-39	1	93	202
Art.1715	413065-00	1	93	202
Art.1715	413065-39	1	93	202
Art.1716	413068-00	1	93	209, 617
Art.1720	413058-00	1	114	208, 616
Art.1723	413070-00	1	56	204
Art.1723	413070-39	1	56	204
Art.1723	413071-00	1	56	204
Art.1723	413071-39	1	56	204
Art.1723	413074-00	1	56	204
Art.1723	413074-39	1	56	204
Art.1723	413075-00	1	56	204
Art.1723	413075-39	1	56	204
Art.1724	413080-00	1	56	204
Art.1724	413080-39	1	56	204
Art.1724	413081-00	1	56	204
Art.1724	413081-39	1	56	204
Art.1724	413084-00	1	56	204
Art.1724	413084-39	1	56	204
Art.1724	413085-00	1	56	204
Art.1724	413085-39	1	56	204
Art.1725	413090-00	1	56	205
Art.1725	413090-39	1	56	205
Art.1725	413091-00	1	56	205
Art.1725	413091-39	1	56	205
Art.1725	413094-00	1	56	205
Art.1725	413094-39	1	56	205
Art.1725	413095-00	1	56	205
Art.1725	413095-39	1	56	205
Art.1727	413150-00	1	56	206
Art.1727	413150-39	1	56	206
Art.1727	413150-73	1		206
Art.1727	413152-00	1	56	206
Art.1727	413152-39	1	56	206
Art.1727	413152-73	1		206
Art.1728	413160-00	1	56	206
Art.1728	413160-39	1		206
Art.1728	413160-73	1		206
Art.1728	413162-00	1	56	206
Art.1728	413162-39	1	56	206
Art.1728	413162-73	1		206

Art. / Acc.	Code	px n° pack	px n° pallet	pag.
Art.1729	413170-00	1	56	205
Art.1729	413170-39	1	56	205
Art.1729	413171-00	1	56	205
Art.1729	413171-39	1	56	205
Art.1729	413174-00	1	56	205
Art.1729	413174-39	1	56	205
Art.1729	413175-00	1	56	205
Art.1729	413175-39	1	56	205
Art.1733	511135-00	1	60	321
Art.1733	511135-39	1	60	321
Art.1734	511136-00	1	40	321
Art.1734	511136-39	1	40	321
Art.1735	413198-00	1	56	209, 617
Art.1736	511121-00	1	75	323
Art.1736	511121-39	1	75	323
Art.1737	511124-00	1	50	323
Art.1737	511124-39	1	50	323
Art.1738	413180-00	1	56	207
Art.1738	413180-39	1	56	207
Art.1738	413181-00	1	56	207
Art.1738	413181-39	1	56	207
Art.1739	413190-00	1	56	207
Art.1739	413190-39	1	56	207
Art.1739	413191-00	1	56	207
Art.1739	413191-39	1	56	207
Art.1739	413192-00	1	56	207
Art.1739	413192-39	1	56	207
Art.1739	413193-00	1	56	207
Art.1739	413193-39	1	56	207
Art.1748	414252-00	1	112	395
Art.1748	414252-39	1	112	395
Art.1748	414254-00	1	112	395
Art.1748	414254-39	1	112	395
Art.1748	414258-00	1	56	395
Art.1748	414258-39	1	56	395
Art.1748	414259-00	1	56	395
Art.1748	414259-39	1	56	395
Art.1768	414242-00			314
Art.1768	414242-39	1	160	314
Art.1768	414243-00	1	80	314
Art.1768	414243-39	1	80	314
Art.1768	414244-00	1	80	314
Art.1768	414244-39	1	80	314
Art.1769	414262-00	1	160	314
Art.1769	414262-39	1	160	314
Art.1769	414263-00	1	80	314
Art.1769	414263-39	1	80	314
Art.1769	414264-00	1	80	314
Art.1769	414264-39	1	80	314
Art.1774	424241-00	1	84	340
Art.1774	424241-39	1	84	340
Art.1774	424242-00	1	84	340
Art.1774	424242-39	1	84	340
Art.1775	414217-00	1	160	315
Art.1775	414217-39	1		315
Art.1775	414218-00	1	80	315
Art.1775	414218-39	1		315
Art.1775	414219-00	1	80	315
Art.1775	414219-39	1		315
Art.1777	423547-00	1	60	350
Art.1779	423555-00	1	60	350
Art.1781	423280-00	1	8	489
Art.1781	423280-39	1	8	489
Art.1781	423281-00	1	8	489
Art.1781	423281-39	1	8	489
Art.1782	320000-00	1	28	261
Art.1782	320001-00	1	28	261
Art.1782	320002-00	1	28	261
Art.1782	320003-00	1	20	261
Art.1782	320004-00	1	20	261
Art.1782	320005-00	1	20	261
Art.1783	320010-00	1	28	261
Art.1783	320011-00	1	28	261
Art.1783	320012-00	1	20	261
Art.1783	320014-00	1	20	261
Art.1783	320015-00	1	20	261
Art.1786	423270-00	1	8	489
Art.1786	423270-39	1	8	489
Art.1786	423271-00	1	8	489
Art.1786	423271-39	1	8	489
Art.1786	423274-00	1	8	489
Art.1786	423274-39	1	8	489
Art.1786	423277-00	1	8	489
Art.1786	423277-39	1	8	489
Art.1786	423278-00	1	8	489
Art.1786	423278-39	1	8	489
Art.1786	423279-00	1	8	489
Art.1786	423279-39	1	8	489
Art.1791	510645-00	1	60	334
Art.1791	510645-39	1	60	334
Art.1792	510647-00	1	60	334
Art.1792	510647-39	1	60	334
Art.1793	510640-00	1	60	334
Art.1793	510640-39	1	60	334
Art.1794	510655-00	1	60	335
Art.1794	510655-39	1	60	335
Art.1795	510650-00	1	30	335
Art.1795	510650-39	1	30	335
Art.1795	510651-00	1	30	335
Art.1795	510651-39	1		335
Art.1795	510652-00	1	30	335
Art.1795	510652-39	1	30	335
Art.1796	510620-00	1	60	334
Art.1796	510620-39	1	60	334
Art.1797	510630-00	1	30	335
Art.1797	510630-39	1	30	335
Art.1797	510631-00	1	30	335
Art.1797	510631-39	1	30	335
Art.1797	510632-00	1	30	335
Art.1797	510632-39	1		335
Art.1798	511025-00	1	16	337
Art.1798	511025-19	1		337
Art.1798	511025-39	1	16	337
Art.1798	511025-1928	1		337
Art.1799	511015-00	1	32	337
Art.1799	511015-39	1	32	337
Art.1822	530420-00	1		396
Art.1823	530425-00	1		397
Art.1824	530422-00	1		397
Art.1825	530424-00	1		397
Art.1836	414260-00	1	112	394
Art.1836	414260-39	1	112	394
Art.1836	414261-00	1	56	394
Art.1836	414261-39	1	56	394
Art.1836	414268-00	1	56	394
Art.1836	414268-39	1	56	394
Art.1838	414280-00	1	112	394
Art.1838	414280-39	1	112	394
Art.1838	414281-00	1	56	394

Art. / Acc.	Code	px n° pack	px n° pallet	pag.
Art.1838	414281-39	1	56	394
Art.1838	414282-00	1	56	394
Art.1838	414282-39	1	56	394
Art.1840	511430-00	1	12	339
Art.1840	511432-00	1	12	339
Art.1840	511433-00	1	12	339
Art.1840	511435-00	1	4	339
Art.1840	511436-00	1	4	339
Art.1840	511437-00	1	4	339
Art.1841	511440-00	1	27	339
Art.1841	511441-00	1	27	339
Art.1844	427250-00	5	60	79
Art.1844	427250-07	5	60	79
Art.1844	427250-19	5	60	79
Art.1844	427250-2121	5	60	79
Art.1844	427251-00	5	60	79
Art.1844	427251-07	5	60	79
Art.1844	427251-19	5	60	79
Art.1844	427251-2121	5	60	79
Art.1845	427445-00	1	80	81
Art.1845	427445-07	1		81
Art.1847	427542-00	1		81
Art.1847	427542-07	1		81
Art.1848	427552-00	1		80
Art.1848	427552-09	1		80
Art.1849	511443-00	1	4	339
Art.1849	511444-00	1	4	339
Art.1849	511445-00	1	4	339
Art.1864	511145-00	1	120	327
Art.1864	511147-00	1	120	327
Art.1865	511156-00	1	60	327
Art.1865	511157-00	1	60	327
Art.1866	511142-00	1	168	326
Art.1866	511142-39	1	168	326
Art.1867	511152-00	1	84	326
Art.1867	511152-39	1	84	326
Art.1868	511182-00	1	168	327
Art.1868	511182-39	1	168	327
Art.1869	511192-00	1	84	327
Art.1869	511192-39	1	84	327
Art.1871	511165-00	1	147	328
Art.1871	511165-39	1	147	328
Art.1871	511166-00	1	147	328
Art.1871	511166-39	1	147	328
Art.1871	530790-00	1		376, 623
Art.1872	530791-00	1		376
Art.1872	530792-00	1		376
Art.1872	530793-00	1		376
Art.1873	511160-00	1	294	328
Art.1873	511160-39	1	294	328
Art.1873	511161-00	1	294	328
Art.1873	511161-39	1	294	328
Art.1874	511140-00	1	168	329
Art.1874	511140-39	1	168	329
Art.1875	511150-00	1	84	329
Art.1875	511150-39	1	84	329
Art.1876	511155-00	1	42	329
Art.1876	511155-39	1	42	329
Art.1877	511170-00	1	294	330
Art.1877	511170-39	1	294	330
Art.1877	511171-00	1	294	330
Art.1877	511171-39	1	294	330
Art.1878	511180-00	1	168	331
Art.1878	511180-39	1	168	331
Art.1879	511190-00	1	84	331
Art.1879	511190-39	1	84	331
Art.1880	511195-00	1	42	331
Art.1880	511195-39	1	42	331
Art.1881	511141-00	1	168	329
Art.1881	511141-39	1	168	329
Art.1882	511175-00	1	147	330
Art.1882	511175-39	1	147	330
Art.1882	511176-00	1	147	330
Art.1882	511176-39	1	147	330
Art.1883	530785-00	1	24	377
Art.1883	530785-73	1		377
Art.1883	530786-00	1	24	377
Art.1884	427244-00	5	60	80
Art.1887	414723-00	1	36	234
Art.1887	414723-39	1	36	234
Art.1887	414724-00	1	36	234
Art.1887	414724-39	1	36	234
Art.1887	414725-00	1	36	234
Art.1887	414725-39	1	36	234
Art.1887	414726-00	1	36	234
Art.1887	414726-39	1	36	234
Art.1887	414727-00	1	36	235
Art.1887	414727-39	1	36	235
Art.1887	414728-00	1	36	235
Art.1887	414728-39	1	36	235
Art.1887	414753-00	1	36	235
Art.1887	414753-39	1		235
Art.1887	414754-00	1	36	234
Art.1887	414754-39	1	36	234
Art.1887	414755-00	1	36	234
Art.1887	414755-39	1	36	234
Art.1887	414757-00	1	36	235
Art.1887	414757-39	1	36	235
Art.1887	414758-00	1	36	235
Art.1887	414758-39	1		235
Art.1887	414759-00	1	36	235
Art.1887	414759-39	1	36	235
Art.1887	414761-00	1	36	235
Art.1887	414761-39	1		235
Art.1887	414762-00	1	36	235
Art.1887	414762-39	1		235
Art.1888	414732-00	1	36	232
Art.1888	414732-39	1	36	232
Art.1888	414733-00	1	36	232
Art.1888	414733-39	1	36	232
Art.1888	414734-00	1	36	233
Art.1888	414734-39	1	36	233
Art.1888	414764-00	1	36	232
Art.1888	414764-39	1	36	232
Art.1888	414765-00	1	36	232
Art.1888	414765-39	1	36	232
Art.1888	414767-00	1	36	233
Art.1888	414767-39	1	36	233
Art.1888	414768-00	1	36	233
Art.1888	414768-39	1		233
Art.1888	414769-00	1	36	233
Art.1888	414769-39	1		233
Art.1889	414793-00	1	36	240
Art.1889	414796-00	1	36	240
Art.1890	414790-00	1	36	239
Art.1890	414794-00	1	36	239
Art.1890	414794-39	1	36	239
Art.1890	414795-00	1	36	239
Art.1890	414795-39	1	36	239

Art. / Acc.	Code	px n° pack	px n° pallet	pag.
Art.1890	414797-00	1	36	239
Art.1891	414781-00	1	36	230
Art.1891	414781-39	1	36	230
Art.1891	414782-00	1	36	230
Art.1891	414782-39	1	36	230
Art.1891	414783-00	1	36	231
Art.1891	414783-39	1	36	231
Art.1891	414784-00	1	36	230
Art.1891	414784-39	1	36	230
Art.1891	414785-00	1	36	230
Art.1891	414785-39	1	36	230
Art.1891	414787-00	1	36	231
Art.1891	414787-39	1	36	231
Art.1891	414788-00	1	36	231
Art.1891	414788-39	1	36	231
Art.1891	414789-00	1	36	231
Art.1891	414789-39	1	36	231
Art.1892	414747-00	1	36	236
Art.1892	414747-30	1		236
Art.1892	414747-39	1	36	236
Art.1892	414747-3028	1		236
Art.1892	414748-00	1	36	236
Art.1892	414748-30	1		236
Art.1892	414748-39	1	36	236
Art.1892	414748-3028	1		236
Art.1892	414749-00	1	36	236
Art.1892	414749-30	1		236
Art.1892	414749-39	1	36	236
Art.1892	414749-3028	1		236
Art.1892	414774-00	1	36	236
Art.1892	414774-30	1		236
Art.1892	414774-39	1	36	236
Art.1892	414774-3028	1		236
Art.1892	414775-00	1	36	236
Art.1892	414775-30	1		236
Art.1892	414775-39	1		236
Art.1892	414775-3028	1		236
Art.1892	414777-00	1	36	236
Art.1892	414777-30	1		236
Art.1892	414777-39	1		236
Art.1892	414777-3028	1		236
Art.1893	414746-00	1	36	237
Art.1893	414746-30	1		237
Art.1893	414746-39	1	36	237
Art.1893	414746-3028	1		237
Art.1893	414763-00	1	36	237
Art.1893	414763-30	1		237
Art.1893	414763-39	1		237
Art.1893	414763-3028	1		237
Art.1893	414779-00	1	36	237
Art.1893	414779-30	1		237
Art.1893	414779-39	1	36	237
Art.1893	414779-3028	1		237
Art.1893	414798-00	1	36	237
Art.1893	414798-30	1		237
Art.1893	414798-39	1	36	237
Art.1893	414798-3028	1		237
Art.1893	414799-00	1	36	237
Art.1893	414799-30	1		237
Art.1893	414799-39	1	36	237
Art.1893	414799-3028	1		237
Art.1894	414744-00	1	36	238
Art.1894	414744-30	1		238
Art.1894	414744-39	1	36	238
Art.1894	414744-3028	1		238
Art.1894	414745-00	1	36	238
Art.1894	414745-30	1		238
Art.1894	414745-39	1	36	238
Art.1894	414745-3028	1		238
Art.1895	414830-00	1	36	241, 618
Art.1897	414820-00	1	52	228
Art.1897	414820-0035	1		228
Art.1897	414820-39	1	52	228
Art.1897	414821-00	1	52	228
Art.1897	414821-0035	1		228
Art.1897	414821-39	1	52	228
Art.1897	414822-00	1	52	228
Art.1897	414822-0035	1		228
Art.1897	414822-39	1	52	228
Art.1897	414823-00	1	52	228
Art.1897	414823-0035	1		228
Art.1897	414825-00	1	36	228
Art.1897	414825-0035	1		228
Art.1897	414825-39	1	36	228
Art.1897	414826-00	1	36	228
Art.1897	414826-0035	1		228
Art.1897	414826-39	1	36	228
Art.1898	414920-00	1	52	229
Art.1898	414920-0035	1		229
Art.1898	414920-39	1	52	229
Art.1898	414921-00	1	52	229
Art.1898	414921-0035	1		229
Art.1898	414921-39	1	52	229
Art.1898	414922-00	1	52	229
Art.1898	414922-0035	1		229
Art.1898	414922-39	1	52	229
Art.1898	414923-00	1	52	229
Art.1898	414923-0035	1		229
Art.1898	414925-00	1	36	229
Art.1898	414925-0035	1		229
Art.1898	414925-39	1	36	229
Art.1898	414926-00	1	36	229
Art.1898	414926-0035	1		229
Art.1898	414926-39	1	36	229
Art.1898	414927-00	1	36	229
Art.1898	414927-0035	1		229
Art.1980	414860-00	1	308	220
Art.1980	414860-39	1	308	220
Art.1980	414861-00	1	308	220
Art.1980	414861-39	1	308	220
Art.1980	414862-00	1	308	220
Art.1980	414862-39	1	308	220
Art.1980	414863-19	1		220
Art.1980	414864-19	1		220
Art.1980	414865-00	1	308	220
Art.1980	414865-39	1	308	220
Art.1980	414866-00	1	308	220
Art.1980	414866-39	1	308	220
Art.1980	414867-00	1	308	220
Art.1980	414867-19	1		220
Art.1980	414867-39	1	308	220
Art.1982	414870-00	1	308	221
Art.1982	414870-39	1	308	221
Art.1982	414871-00	1	308	221
Art.1982	414871-39	1	308	221
Art.1982	414872-00	1	308	221
Art.1982	414872-39	1	308	221
Art.1983	414880-00	1	308	221
Art.1983	414880-39	1	308	221

Index

Art. / Acc.	Code	px n° pack	px n° pallet	pag.
Art.1983	414881-00	1	308	221
Art.1983	414881-39	1	308	221
Art.1983	414882-00	1	308	221
Art.1983	414882-39	1	308	221
Art.1984	414890-00	1	308	221
Art.1984	414890-39	1	308	221
Art.1984	414891-00	1	308	221
Art.1984	414891-39	1	308	221
Art.1984	414892-00	1	308	221
Art.1984	414892-39	1	308	221
Art.1987	414910-00	1	90	225
Art.1987	414910-39	1	90	225
Art.1987	414911-00	1	90	225
Art.1987	414911-39	1	90	225
Art.1988	414930-00	1	90	224
Art.1988	414930-39	1	90	224
Art.1988	414931-00	1	90	224
Art.1988	414931-39	1	90	224
Art.1989	414915-00	1	90	225
Art.1990	414900-00	1	90	222
Art.1990	414900-39	1	90	222
Art.1990	414901-00	1	90	222
Art.1990	414901-39	1	90	222
Art.1991	414940-00	1	90	224
Art.1991	414940-39	1	90	224
Art.1991	414941-00	1	90	224
Art.1991	414941-39	1	90	224
Art.1998	414850-00	1	90	223
Art.1998	414850-0035	1		223
Art.1998	414850-39	1	90	223
Art.1998	414851-00	1	90	223
Art.1998	414851-0035	1		223
Art.1998	414851-39	1	90	223
Art.1998	414852-00	1	90	223
Art.1998	414852-0035	1		223
Art.1998	414852-39	1	90	223
Art.1998	414853-00	1	90	223
Art.1998	414853-0035	1		223
Art.1998	414853-39	1	90	223
Art.1999	414840-00	1	90	223
Art.1999	414840-0035	1		223
Art.1999	414840-39	1	90	223
Art.1999	414841-00	1	90	223
Art.1999	414841-0035	1		223
Art.1999	414841-39	1	90	223
Art.1999	414842-00	1	90	223
Art.1999	414842-0035	1		223
Art.1999	414842-39	1	90	223
Art.1999	414843-00	1	90	223
Art.1999	414843-0035	1		223
Art.1999	414843-39	1	90	223
Acc.2027	132953-00	50		52
Acc.2027	132954-00	50		52
Acc.2028	132955-00	50		52
Acc.2028	132956-00	50		52
Acc.2029	132957-00	50		52
Acc.2029	132958-00	50		52
Acc.2031	994012-00	10		72
Acc.2031	994013-00	10		72
Acc.2032	994015-00	10		72
Art.2150	413300-00	1	32	264
Art.2150	413300-39	1		264
Art.2150	413301-00	1	20	264
Art.2150	413301-39	1		264
Art.2150	413302-00	1	20	264
Art.2150	413302-39	1	20	264
Art.2151	413310-00	1	16	264
Art.2151	413310-39	1	16	264
Art.2151	413311-00	1	16	264
Art.2151	413311-39	1	16	264
Art.2152	413320-00	1	32	265
Art.2152	413320-39	1	32	265
Art.2152	413321-00	1	32	265
Art.2152	413321-39	1	32	265
Art.2152	413322-00	1	32	265
Art.2152	413322-39	1	32	265
Art.2152	413323-00	1	20	265
Art.2152	413323-39	1	20	265
Art.2152	413324-00	1	20	265
Art.2152	413324-39	1	20	265
Art.2152	413325-00	1	20	265
Art.2152	413325-39	1	20	265
Art.2153	413330-00	1	16	265
Art.2153	413330-39	1	16	265
Art.2153	413331-00	1	16	265
Art.2153	413331-39	1	16	265
Art.2153	413332-00	1	16	265
Art.2153	413332-39	1	16	265
Art.2153	413333-00	1	16	265
Art.2153	413333-39	1	16	265
Art.2153	413334-00	1	16	265
Art.2153	413334-39	1	16	265
Art.2153	413335-00	1	16	265
Art.2153	413335-39	1	16	265
Art.2155	413390-00	1	32	266
Art.2155	413390-39	1	32	266
Art.2155	413391-00	1	20	266
Art.2155	413391-39	1	20	266
Art.2156	413360-00	1	10	266
Art.2156	413360-39	1	10	266
Art.2157	413370-00	1	32	267
Art.2157	413370-39	1	32	267
Art.2157	413371-00	1	32	267
Art.2157	413371-39	1	32	267
Art.2157	413372-00	1	32	267
Art.2157	413372-39	1	32	267
Art.2157	413373-00	1	20	267
Art.2157	413373-39	1	20	267
Art.2157	413374-00	1	20	267
Art.2157	413374-39	1	20	267
Art.2157	413375-00	1	20	267
Art.2157	413375-39	1	20	267
Art.2158	413480-00	1	10	267
Art.2158	413480-39	1	10	267
Art.2158	413481-00	1	10	267
Art.2158	413481-39	1	10	267
Art.2158	413482-00	1	10	267
Art.2158	413482-39	1	10	267
Art.2168	413470-00	1		269
Art.2168	413470-0035	1		269
Art.2168	413470-39	1		269
Art.2169	413490-00	1		269
Art.2169	413490-0035	1		269
Art.2169	413490-39	1		269
Art.2169	413491-00	1		269
Art.2169	413491-0035	1		269
Art.2169	413491-39	1		269
Art.2169	413492-00	1		269
Art.2169	413492-0035	1		269

Art. / Acc.	Code	px n° pack	px n° pallet	pag.
Art.2169	413492-39	1		269
Art.2176	412646-00	1	20	275
Art.2176	412647-00	1	20	275
Art.2176	412648-00	1	20	275
Art.2177	412698-00	1	20	273
Art.2177	412698-39	1		273
Art.2179	412656-00	1	20	274
Art.2179	412657-00	1	20	274
Art.2179	412658-00	1	20	274
Art.2180	412600-00	1	20	278
Art.2180	412601-00	1	20	278
Art.2180	412602-00	1	20	278
Art.2181	412610-00	1	20	278
Art.2181	412611-00	1	20	278
Art.2181	412612-00	1	20	278
Art.2182	412620-00	1	20	279
Art.2182	412621-00	1	20	279
Art.2182	412622-00	1	20	279
Art.2183	412630-00	1	20	279
Art.2183	412631-00	1	20	279
Art.2183	412632-00	1	20	279
Art.2184	412653-00	1	20	274
Art.2184	412654-00	1	20	274
Art.2184	412655-00	1	20	274
Art.2185	412650-00	1	20	275
Art.2185	412651-00	1	20	275
Art.2185	412652-00	1	20	275
Art.2186	412661-00	1	20	277
Art.2186	412662-00	1	20	277
Art.2187	412671-00	1	20	277
Art.2187	412672-00	1		277
Art.2188	412690-00	1	20	272
Art.2188	412690-39	1		272
Art.2189	412695-00	1	20	273
Art.2189	412695-39	1		273
Art.2190	412891-00	1		286
Art.2190	412891-0035	1		286
Art.2190	412891-6035	1		286
Art.2190	412896-00	1		302
Art.2190	412896-0035	1		302
Art.2190	412896-6035	1		302
Art.2190	412897-00	1		302
Art.2191	412745-00	1		302
Art.2191	412746-00	1		302
Art.2191	412746-0035	1		302
Art.2191	412746-6035	1		302
Art.2191	412750-00	1		286
Art.2191	412750-0035	1		286
Art.2191	412750-6035	1		286
Art.2192	412790-00	1		287
Art.2192	412790-0035	1		287
Art.2192	412790-6035	1		287
Art.2192	412796-00	1		303
Art.2192	412796-0035	1		303
Art.2192	412796-6035	1		303
Art.2192	412797-00	1		303
Art.2193	412681-00	1		287
Art.2193	412681-0035	1		287
Art.2193	412681-6035	1		287
Art.2193	412686-00	1		303
Art.2193	412686-0035	1		303
Art.2193	412686-6035	1		303
Art.2193	412687-00	1		303
Art.2194	412736-00	1		298
Art.2194	412736-0035	1		298
Art.2194	412736-6035	1		298
Art.2194	412737-00	1		298
Art.2194	412768-00	1		282
Art.2194	412768-0035	1		282
Art.2194	412768-6035	1		282
Art.2195	412758-00	1		299
Art.2195	412765-00	1		283
Art.2195	412765-0035	1		283
Art.2195	412765-6035	1		283
Art.2195	412769-00	1		299
Art.2195	412769-0035	1		299
Art.2195	412769-6035	1		299
Art.2196	412770-00	1		285
Art.2196	412770-0035	1		285
Art.2196	412770-6035	1		285
Art.2196	412776-00	1		301
Art.2196	412776-0035	1		301
Art.2196	412776-6035	1		301
Art.2196	412777-00	1		301
Art.2197	412780-00	1		285
Art.2197	412780-0035	1		285
Art.2197	412780-6035	1		285
Art.2197	412786-00	1		301
Art.2197	412786-0035	1		301
Art.2197	412786-6035	1		301
Art.2197	412787-00	1		301
Art.2198	412691-00	1		280
Art.2198	412691-39	1		280
Art.2198	412692-00	1		296
Art.2198	412692-39	1		296
Art.2199	412694-00	1		297
Art.2199	412694-39	1		297
Art.2199	412696-00	1		281
Art.2199	412696-39	1		281
Art.2200	412697-00	1		281
Art.2200	412697-39	1		281
Art.2200	412699-00	1		297
Art.2200	412699-39	1		297
Art.2201	412722-00	1		298
Art.2201	412722-0035	1		298
Art.2201	412722-6035	1		298
Art.2201	412723-00	1		282
Art.2201	412723-0035	1		282
Art.2201	412723-6035	1		282
Art.2201	412724-00	1		298
Art.2202	412689-00	1		299
Art.2202	412688-00	1		299
Art.2202	412688-0035	1		299
Art.2202	412688-6035	1		299
Art.2205	412685-00	1		283
Art.2205	412685-0035	1		283
Art.2205	412685-6035	1		283
Acc.2290	143997-00	20		69
Acc.2291	143998-00	5		69
Acc.2292	143999-00	10		69
Acc.2513	993917-00	10		69
Acc.2514	993919-00	10		69
Acc.2516	994041-00	1		79
Acc.2518	994019-00	20		27, 55, 59, 64, 69
Acc.2520	994631-00	20		4, 11
Acc.2522	994028-00	20		55, 59
Acc.2522	998047-00	1		55-59
Art.2537	431880-00	1	150	358

Index

Art. / Acc.	Code disano	px n° pack	px n° pallet	pag.
Art.2537	431880-39	1		358
Art.2537	431882-00	1	150	358
Art.2537	431882-39	1		358
Art.2537	431883-00	1	150	358
Art.2537	431883-39	1		358
Art.2565	422510-00	1	108	363
Art.2565	422510-39	1	108	363
Art.2565	422511-00	1	108	363
Art.2565	422511-39	1	108	363
Art.2565	422514-00	1	108	363
Art.2565	422514-39	1	108	363
Art.2565	422515-00	1	108	363
Art.2565	422515-39	1	108	363
Art.2565	422518-00	1	108	363
Art.2565	422518-39	1	108	363
Art.2565	422519-00	1	108	363
Art.2565	422519-39	1	108	363
Art.2567	422540-00	1	108	364
Art.2567	422540-39	1	108	364
Art.2567	422541-00	1	108	364
Art.2567	422541-39	1	108	364
Art.2567	422544-00	1	108	364
Art.2567	422544-39	1	108	364
Art.2567	422545-00	1	108	364
Art.2567	422545-39	1	108	364
Art.2567	422548-00	1	108	364
Art.2567	422548-39	1		364
Art.2567	422549-00	1	108	364
Art.2567	422549-39	1	108	364
Art.2569	422570-00	1	108	365
Art.2569	422570-39	1	108	365
Art.2569	422571-00	1	108	365
Art.2569	422571-39	1	108	365
Art.2569	422574-00	1	108	365
Art.2569	422574-39	1	108	365
Art.2569	422575-00	1	108	365
Art.2569	422575-39	1	108	365
Art.2577	431860-00	1	112	361
Art.2577	431861-00	1	112	361
Art.2577	431862-00	1	112	361
Art.2577	431863-00	1	112	361
Art.2577	431864-00	1	112	361
Art.2577	431865-00	1	112	361
Art.2578	431870-00	1	112	361
Art.2578	431871-00	1	112	361
Acc.2608	994617-00	5		27
Art.2797	320031-00	1	28	261
Art.2797	320032-00	1	28	261
Art.2797	320033-00	1	20	261
Art.2797	320034-00	1	20	261
Art.2880	330935-00	1	40	191
Art.2885	330785-00	1	40	187
Art.2885	330785-0041	1	40	189
Art.2885	330786-00	1	40	187
Art.2885	330786-0041	1	40	189
Art.2885	330787-00	1	40	187
Art.2885	330787-0041	1	40	189
Art.2889	330873-00	1	30	259
Art.2889	330874-00	1	30	259
Art.2889	330875-00	1	30	259
Art.2890	330887-00	1	30	259
Art.2890	330888-00	1	30	259
Art.2890	330889-00	1	30	259
Art.2896	380092-00	1	42	183
Art.2900	380000-00	1	24	177
Art.2900	380000-0041	1		177
Art.2900	380001-00	1	24	177
Art.2900	380001-0041	1		177
Art.2900	380002-00	1	24	177
Art.2900	380002-0041	1		177
Art.2900	380003-00	1	24	177
Art.2900	380003-0041	1		177
Art.2901	380010-00	1	24	177
Art.2901	380010-0041	1		177
Art.2901	380011-00	1	24	177
Art.2901	380011-0041	1		177
Art.2901	380012-00	1	24	177
Art.2901	380012-0041	1		177
Art.2901	380013-00	1	24	177
Art.2901	380013-0041	1		177
Art.2902	380020-00	1	24	176
Art.2902	380020-0041	1		176
Art.2902	380021-00	1	24	176
Art.2902	380021-0041	1		176
Art.2902	380022-00	1	24	176
Art.2902	380022-0041	1		176
Art.2902	380023-00	1	24	176
Art.2902	380023-0041	1		176
Art.2910	390000-00	1	24	179
Art.2910	390000-0041	1		179
Art.2910	390001-00	1	24	179
Art.2910	390001-0041	1		179
Art.2910	390002-00	1	24	179
Art.2910	390002-0041	1		179
Art.2910	390003-00	1	24	179
Art.2910	390003-0041	1		179
Art.2911	390010-00	1	24	179
Art.2911	390010-0041	1		179
Art.2911	390011-00	1	24	179
Art.2911	390011-0041	1		179
Art.2911	390012-00	1	24	179
Art.2911	390012-0041	1		179
Art.2911	390013-00	1	24	179
Art.2911	390013-0041	1		179
Art.2912	390020-00	1	24	178
Art.2912	390020-0041	1		178
Art.2912	390021-00	1	24	178
Art.2912	390021-0041	1		178
Art.2912	390022-00	1	24	178
Art.2912	390022-0041	1		178
Art.2912	390023-00	1	24	178
Art.2912	390023-0041	1		178
Art.2920	380030-00	1	42	171
Art.2920	380030-0041	1		171
Art.2920	380031-00	1	42	171
Art.2920	380031-0041	1		171
Art.2920	380032-00	1	42	171
Art.2920	380032-0041	1		171
Art.2920	380033-00	1	42	171
Art.2920	380033-0041	1		171
Art.2921	380040-00	1	42	171
Art.2921	380040-0041	1		171
Art.2921	380041-00	1	42	171
Art.2921	380041-0041	1		171
Art.2921	380042-00	1	42	171
Art.2921	380042-0041	1		171
Art.2921	380043-00	1	42	171
Art.2921	380043-0041	1		171
Art.2922	380050-00	1	42	170

Art. / Acc.	Code	px n° pack	px n° pallet	pag.
Art.2922	380050-0041	1		170
Art.2922	380051-00	1	42	170
Art.2922	380051-0041	1		170
Art.2922	380052-00	1	42	170
Art.2922	380052-0041	1		170
Art.2922	380053-00	1	42	170
Art.2922	380053-0041	1		170
Art.2923	380060-00	1	42	121
Art.2923	380061-00	1	42	121
Art.2923	380062-00	1	42	121
Art.2923	380063-00	1	42	121
Art.2923	380065-00	1	42	121
Art.2923	380066-00	1	42	121
Art.2923	380067-00	1	42	121
Art.2923	380068-00	1	42	121
Art.2924	390100-00	1	42	172
Art.2924	390100-0041	1	42	172
Art.2924	390101-00	1	42	172
Art.2924	390101-0041	1	42	172
Art.2924	390102-00	1	42	172
Art.2924	390102-0041	1	42	172
Art.2924	390103-00	1	42	172
Art.2924	390103-0041	1	42	172
Art.2925	390110-00	1	42	173
Art.2925	390110-0041	1	42	173
Art.2925	390111-00	1	42	173
Art.2925	390111-0041	1	42	173
Art.2925	390112-00	1	42	173
Art.2925	390112-0041	1	42	173
Art.2925	390113-00	1	42	173
Art.2925	390113-0041	1	42	173
Art.2926	390120-00	1	42	173
Art.2926	390120-0041	1	42	173
Art.2926	390121-00	1	42	173
Art.2926	390121-0041	1	42	173
Art.2926	390122-00	1	42	173
Art.2926	390122-0041	1	42	173
Art.2926	390123-00	1	42	173
Art.2926	390123-0041	1	42	173
Art.2930	390050-00	1	96	163
Art.2930	390050-0041	1		163
Art.2930	390051-00	1	96	163
Art.2930	390051-0041	1		163
Art.2930	390052-00	1	96	163
Art.2930	390052-0041	1		163
Art.2930	390053-00	1	96	163
Art.2930	390053-0041	1		163
Art.2931	390060-00	1	96	163
Art.2931	390060-0041	1		163
Art.2931	390061-00	1	96	163
Art.2931	390061-0041	1		163
Art.2931	390062-00	1	96	163
Art.2931	390062-0041	1		163
Art.2931	390063-00	1	96	163
Art.2931	390063-0041	1		163
Art.2932	390040-00	1	96	162
Art.2932	390040-0041	1		162
Art.2932	390041-00	1	96	162
Art.2932	390041-0041	1		162
Art.2932	390042-00	1	96	162
Art.2932	390042-0041	1		162
Art.2932	390043-00	1	96	162
Art.2932	390043-0041	1		162
Art.2933	390070-00	1	96	165
Art.2933	390070-0041	1		165
Art.2933	390071-00	1	96	165
Art.2933	390071-0041	1		165
Art.2933	390072-00	1	96	165
Art.2933	390072-0041	1		165
Art.2933	390073-00	1	96	165
Art.2933	390073-0041	1		165
Art.2934	390080-00	1	96	165
Art.2934	390080-0041	1		165
Art.2934	390081-00	1	96	165
Art.2934	390081-0041	1		165
Art.2934	390082-00	1	96	165
Art.2934	390082-0041	1		165
Art.2934	390083-00	1	96	165
Art.2934	390083-0041	1		165
Art.2935	390095-00	1	96	164
Art.2935	390095-0041	1	96	164
Art.3116	322928-00	1	21	193
Art.3116	322929-00	1	21	193
Art.3117	323128-00	1	21	193
Art.3117	323129-00	1	21	193
Art.3142	326785-00	1	6	505
Art.3146	326790-00	1	6	505
Art.3146	326790-39	1	6	505
Art.3146	326791-00	1	6	505
Art.3146	326791-39	1	6	505
Art.3192	412830-00	1		293
Art.3192	412830-0035	1		293
Art.3192	412830-6035	1		293
Art.3192	412833-00	1		309
Art.3192	412833-0035	1		309
Art.3192	412833-6035	1		309
Art.3192	412834-00	1		309
Art.3193	412860-00	1		304
Art.3193	412860-0035	1		304
Art.3193	412860-6035	1		304
Art.3193	412867-00	1		304
Art.3193	412868-00	1		288
Art.3193	412868-0035	1		288
Art.3193	412868-6035	1		288
Art.3194	412824-00	1		288
Art.3194	412824-0035	1		288
Art.3194	412824-6035	1		288
Art.3194	412829-00	1		304
Art.3194	412829-0035	1		304
Art.3194	412829-6035	1		304
Art.3194	412835-00	1		304
Art.3195	412820-00	1		289
Art.3195	412820-0035	1		289
Art.3195	412820-6035	1		289
Art.3195	412836-00	1		305
Art.3195	412836-0035	1		305
Art.3195	412836-6035	1		305
Art.3195	412837-00	1		305
Art.3196	412800-00	1		291
Art.3196	412800-0035	1		291
Art.3196	412800-6035	1		291
Art.3196	412803-00	1		307
Art.3196	412803-0035	1		307
Art.3196	412803-6035	1		307
Art.3196	412804-00	1		307
Art.3198	412810-00	1		291
Art.3198	412810-0035	1		291
Art.3198	412810-6035	1		291
Art.3198	412813-00	1		307

Index

Art. / Acc.	Code disano	px n° pack	px n° pallet	pag.
Art.3198	412813-0035	1		307
Art.3198	412813-6035	1		307
Art.3198	412814-00	1		307
Art.3202	326920-00	1	6	481
Art.3202	326920-39	1	6	481
Art.3202	326923-00	1	6	480
Art.3202	326923-30	1		480
Art.3202	326923-39	1	6	480
Art.3202	326923-73	1		480
Art.3202	326923-3028	1		480
Art.3202	326923-3073	1		480
Art.3203	412886-00	1		305
Art.3203	412887-00	1		305
Art.3203	412887-0035	1		305
Art.3203	412887-6035	1		305
Art.3206	327200-00	1	6	479
Art.3206	327200-39	1	6	479
Art.3209	327220-00	1	6	481
Art.3209	327220-39	1	6	481
Art.3212	326970-00	1	6	482
Art.3212	326970-39	1	6	482
Art.3214	326985-00	1	6	482
Art.3216	327210-00	1	6	478
Art.3216	327210-39	1	6	478
Art.3219	412885-00	1		289
Art.3219	412885-0035	1		289
Art.3219	412885-6035	1		289
Art.3230	412840-00	1		292
Art.3230	412840-0035	1		292
Art.3230	412840-6035	1		292
Art.3230	412843-00	1		308
Art.3230	412843-0035	1		308
Art.3230	412843-6035	1		308
Art.3230	412844-00	1		308
Art.3230	412880-00	1		293
Art.3230	412880-0035	1		293
Art.3230	412880-6035	1		293
Art.3231	412870-00	1		292
Art.3231	412870-0035	1		292
Art.3231	412870-6035	1		292
Art.3231	412873-00	1		308
Art.3231	412873-0035	1		308
Art.3231	412873-6035	1		308
Art.3231	412874-00	1		308
Art.3232	412883-00	1		309
Art.3232	412883-0035	1		309
Art.3232	412883-6035	1		309
Art.3232	412884-00	1		309
Art.3234	326966-00	1		474
Art.3234	326969-00	1		475
Art.3269	326967-00	1		475
Art.3269	326968-00	1		474
Art.3270	330342-00	1	15	551
Art.3270	330342-30	1		551
Art.3270	330342-39	1	15	551
Art.3270	330343-00	1	15	551
Art.3270	330343-30	1		551
Art.3270	330343-39	1	15	551
Art.3270	330348-00	1	15	551
Art.3270	330348-30	1		551
Art.3270	330348-39	1	15	551
Art.3270	330349-00	1	15	551
Art.3270	330349-30	1		551
Art.3270	330349-39	1	15	551
Art.3274	320360-00	1	15	551
Art.3274	320360-39	1	15	551
Art.3274	320361-00	1	15	551
Art.3274	320361-39	1	15	551
Art.3274	320363-00	1	15	551
Art.3274	320363-39	1	15	551
Art.3275	330360-00	1	30	546
Art.3275	330360-39	1	30	546
Art.3275	330361-00	1	30	546
Art.3275	330361-39	1	30	546
Art.3275	330362-00	1	30	546
Art.3275	330362-39	1	30	546
Art.3277	330380-00	1	30	546
Art.3277	330380-39	1	30	546
Art.3277	330381-00	1	30	546
Art.3277	330381-39	1	30	546
Art.3277	330383-00	1	30	546
Art.3277	330383-39	1	30	546
Art.3278	330390-00	1	30	547
Art.3278	330390-39	1	30	547
Art.3278	330391-00	1	30	547
Art.3278	330391-39	1	30	547
Art.3278	330393-00	1	30	547
Art.3278	330393-39	1	30	547
Art.3280	330400-00	1	36	555
Art.3282	330400-39	1	36	555
Art.3282	330401-00	1	36	555
Art.3282	330401-39	1	36	555
Art.3282	330402-00	1	36	555
Art.3282	330402-39	1	36	555
Art.3283	330430-00	1	36	555
Art.3283	330430-39	1	36	555
Art.3283	330431-00	1	36	555
Art.3283	330431-39	1	36	555
Art.3283	330432-00	1	36	555
Art.3283	330432-39	1	36	555
Art.3285	340100-00	1	36	554
Art.3285	340100-39	1	36	554
Art.3285	340101-00	1	36	554
Art.3285	340101-39	1	36	554
Art.3285	340102-00	1	36	554
Art.3285	340102-39	1	36	554
Art.3285	340103-00	1	36	554
Art.3285	340103-39	1	36	554
Art.3286	340110-00	1	36	554
Art.3286	340110-39	1	36	554
Art.3286	340111-00	1	36	554
Art.3286	340111-39	1	36	554
Art.3286	340112-00	1	36	554
Art.3286	340112-39	1	36	554
Art.3286	340113-00	1	36	554
Art.3286	340113-39	1	36	554
Art.3290	330600-00	1	22	535
Art.3290	330600-39	1	22	535
Art.3290	330601-00	1	22	535
Art.3290	330601-39	1	22	535
Art.3290	330602-00	1	22	535
Art.3290	330602-39	1		535
Art.3290	330603-00	1	22	535
Art.3290	330603-39	1	22	535
Art.3290	330604-00	1	22	535
Art.3290	330604-39	1	22	535
Art.3290	330605-00	1	22	535
Art.3290	330605-39	1	22	535
Art.3291	330610-00	1	22	535

Art. / Acc.	Code	px n° pack	px n° pallet	pag.
Art.3291	330610-39	1	22	535
Art.3291	330611-00	1	22	535
Art.3291	330611-39	1	22	535
Art.3291	330612-00	1	22	535
Art.3291	330612-39	1	22	535
Art.3291	330613-00	1	22	535
Art.3291	330613-39	1	22	535
Art.3291	330614-00	1	22	535
Art.3291	330614-39	1	22	535
Art.3291	330615-00	1	22	535
Art.3291	330615-39	1	22	535
Art.3292	330660-00	1	22	536
Art.3292	330660-39	1	22	536
Art.3292	330661-00	1		536
Art.3292	330661-39	1		536
Art.3292	330662-00	1		536
Art.3292	330662-39	1		536
Art.3292	330664-00	1	22	536
Art.3292	330664-39	1	22	536
Art.3292	330665-00	1	22	536
Art.3292	330665-39	1	22	536
Art.3292	330666-00	1	22	536
Art.3292	330666-39	1	22	536
Art.3293	330680-00	1	22	536
Art.3293	330680-39	1	22	536
Art.3293	330681-00	1	22	536
Art.3293	330681-39	1		536
Art.3293	330682-00	1		536
Art.3293	330682-39	1		536
Art.3293	330684-00	1	22	536
Art.3293	330684-39	1	22	536
Art.3293	330685-00	1	22	536
Art.3293	330685-39	1	22	536
Art.3293	330686-00	1	22	536
Art.3293	330686-39	1	22	536
Art.3294	330700-00	1	22	537
Art.3294	330700-39	1	22	537
Art.3294	330701-00	1	22	537
Art.3294	330701-39	1	22	537
Art.3294	330702-00	1	22	537
Art.3294	330702-39	1	22	537
Art.3294	330703-00	1	22	537
Art.3294	330703-39	1	22	537

Art. / Acc.	Code	px n° pack	px n° pallet	pag.
Art.3295	330720-00	1	22	537
Art.3295	330720-39	1	22	537
Art.3295	330721-00	1	22	537
Art.3295	330721-39	1	22	537
Art.3295	330722-00	1	22	537
Art.3295	330722-39	1	22	537
Art.3295	330724-00	1	22	537
Art.3295	330724-39	1	22	537
Art.3295	330725-00	1	22	537
Art.3295	330725-39	1	22	537
Art.3295	330726-00	1	22	537
Art.3295	330726-39	1	22	537
Art.3296	330900-00	1	22	532
Art.3296	330901-00	1	22	532
Art.3296	330902-00	1	22	532
Art.3296	330903-00	1	22	532
Art.3296	330904-00	1	22	532
Art.3296	330905-00	1	22	532
Art.3296	330906-00	1	22	532
Art.3296	330907-00	1	22	532
Art.3297	330910-00	1	22	533
Art.3297	330911-00	1	22	533
Art.3298	330915-00	1	22	533
Art.3298	330916-00	1	22	533
Art.3300	330305-00	1		317
Art.3300	330306-00	1		317
Art.3301	330307-00	1		317
Art.3322	326922-00	1	6	481
Art.3322	326922-39	1	6	481
Art.3326	327202-00	1	6	479
Art.3326	327202-39	1	6	479
Art.3327	328270-00	1	18	462
Art.3327	328270-39	1	18	462
Art.3327	328271-00	1	18	462
Art.3327	328271-39	1	18	462
Art.3327	328272-00	1	18	462
Art.3327	328272-39	1	18	462
Art.3328	328280-00	1	18	463
Art.3328	328280-39	1	18	463
Art.3328	328281-00	1	18	463
Art.3328	328281-39	1	18	463
Art.3328	328282-00	1	18	463
Art.3328	328282-39	1	18	463

Art. / Acc.	Code	px n° pack	px n° pallet	pag.
Art.3329	328290-00	1	18	463
Art.3329	328290-39	1	18	463
Art.3329	328291-00	1	18	463
Art.3329	328291-39	1	18	463
Art.3329	328292-00	1	18	463
Art.3329	328292-39	1	18	463
Art.3331	330040-00	1	12	491
Art.3331	330041-00	1	12	491
Art.3331	330042-00	1	12	491
Art.3331	330043-00	1	12	491
Art.3331	330044-00	1	12	491
Art.3331	330045-00	1	12	491
Art.3333	330030-00	1	12	493
Art.3333	330031-00	1	12	493
Art.3333	330032-00	1	12	493
Art.3334	330110-00	1	9	491
Art.3334	330111-00	1	9	491
Art.3334	330112-00	1	9	491
Art.3334	330113-00	1	9	491
Art.3334	330114-00	1	9	491
Art.3334	330115-00	1	9	491
Art.3335	330033-00	1	12	493
Art.3335	330034-00	1	12	493
Art.3335	330035-00	1	12	493
Art.3336	328200-00	1	12	460
Art.3336	328200-39	1	12	460
Art.3336	328201-00	1	12	460
Art.3336	328201-39	1	12	460
Art.3337	328210-00	1	18	460
Art.3337	328210-39	1	18	460
Art.3337	328211-00	1	18	460
Art.3337	328211-39	1	18	460
Art.3337	328212-00	1	18	460
Art.3337	328212-39	1	18	460
Art.3338	328240-00	1	18	461
Art.3338	328240-39	1	18	461
Art.3338	328241-00	1	18	461
Art.3338	328241-39	1	18	461
Art.3338	328242-00	1	18	461
Art.3338	328242-39	1	18	461
Art.3339	328250-00	1	18	461
Art.3339	328250-39	1	18	461
Art.3339	328251-00	1	18	461

Index

Art. / Acc.	Code disano	px n° pack	px n° pallet	pag.
Art.3339	328251-39	1	18	461
Art.3339	328252-00	1	18	461
Art.3339	328252-39	1	18	461
Art.3340	330210-00	1	2	443
Art.3340	330210-39	1	2	443
Art.3340	330211-00	1	2	443
Art.3340	330211-39	1	2	443
Art.3340	330212-00	1	2	443
Art.3340	330212-39	1	2	443
Art.3340	330213-00	1	2	443
Art.3340	330213-39	1	2	443
Art.3340	330214-00	1	2	443
Art.3340	330214-39	1	2	443
Art.3340	330215-00	1	2	443
Art.3340	330215-39	1	2	443
Art.3342	330230-00	1	2	445
Art.3342	330230-39	1	2	445
Art.3342	330231-00	1	2	445
Art.3342	330231-39	1	2	445
Art.3342	330232-00	1	2	445
Art.3342	330232-39	1	2	445
Art.3342	330233-00	1	2	445
Art.3342	330233-39	1	2	445
Art.3343	330240-00	1	2	444
Art.3343	330240-39	1	2	444
Art.3343	330241-00	1	2	444
Art.3343	330241-39	1	2	444
Art.3343	330242-00	1	2	444
Art.3343	330242-39	1	2	444
Art.3343	330243-00	1	2	444
Art.3343	330243-39	1	2	444
Art.3344	330250-00	1	2	445
Art.3344	330250-39	1		445
Art.3344	330251-00	1	2	445
Art.3344	330251-39	1		445
Art.3350	330510-00	1	12	435
Art.3350	330510-30	1		435
Art.3350	330510-39	1	12	435
Art.3350	330510-0054	1		435
Art.3350	330510-3028	1		435
Art.3350	330510-3954	1		435
Art.3350	330511-00	1	12	435
Art.3350	330511-30	1		435
Art.3350	330511-39	1	12	435
Art.3350	330511-0054	1		435
Art.3350	330511-3028	1		435
Art.3350	330511-3954	1		435
Art.3350	330512-00	1	12	435
Art.3350	330512-30	1		435
Art.3350	330512-39	1	12	435
Art.3350	330512-0054	1		435
Art.3350	330512-3028	1		435
Art.3350	330512-3954	1		435
Art.3350	330517-00	1	12	435
Art.3350	330517-30	1		435
Art.3350	330517-39	1	12	435
Art.3350	330517-0054	1		435
Art.3350	330517-3028	1		435
Art.3350	330517-3954	1		435
Art.3350	330518-00	1	12	435
Art.3350	330518-30	1		435
Art.3350	330518-39	1	12	435
Art.3350	330518-0054	1		435
Art.3350	330518-3028	1		435
Art.3350	330518-3954	1		435
Art.3351	330520-00	1	12	432
Art.3351	330520-30	1		432
Art.3351	330520-39	1	12	432
Art.3351	330520-0054	1		432
Art.3351	330520-3028	1		432
Art.3351	330520-3954	1		432
Art.3351	330521-00	1	12	432
Art.3351	330521-30	1		432
Art.3351	330521-39	1	12	432
Art.3351	330521-0054	1		432
Art.3351	330521-3028	1		432
Art.3351	330521-3954	1		432
Art.3352	330530-00	1	12	433
Art.3352	330530-30	1		433
Art.3352	330530-39	1	12	433
Art.3352	330530-0054	1		433
Art.3352	330530-3028	1		433
Art.3352	330530-3954	1		433
Art.3352	330531-00	1	12	433
Art.3352	330531-30	1		433
Art.3352	330531-39	1	12	433
Art.3352	330531-0054	1		433
Art.3352	330531-3028	1		433
Art.3352	330531-3954	1		433
Art.3353	330540-00	1	12	433
Art.3353	330540-30	1		433
Art.3353	330540-39	1	12	433
Art.3353	330540-0054	1		433
Art.3353	330540-3028	1		433
Art.3353	330540-3954	1		433
Art.3353	330541-00	1	12	433
Art.3353	330541-30	1		433
Art.3353	330541-39	1	12	433
Art.3353	330541-0054	1		433
Art.3353	330541-3028	1		433
Art.3353	330541-3954	1		433
Art.3354	330532-00	1	12	435
Art.3354	330532-30	1		435
Art.3354	330532-39	1	12	435
Art.3354	330532-0054	1		435
Art.3354	330532-3028	1		435
Art.3354	330532-3954	1		435
Art.3354	330533-00	1	12	435
Art.3354	330533-30	1		435
Art.3354	330533-39	1	12	435
Art.3354	330533-0054	1		435
Art.3354	330533-3028	1		435
Art.3354	330533-3954	1		435
Art.3354	330534-00	1	12	435
Art.3354	330534-30	1		435
Art.3354	330534-39	1	12	435
Art.3354	330534-0054	1		435
Art.3354	330534-3028	1	12	435
Art.3354	330534-3954	1		435
Art.3355	330550-00	1	12	434
Art.3355	330550-30	1		434
Art.3355	330550-39	1	12	434
Art.3355	330550-0054	1		434
Art.3355	330550-3028	1		434
Art.3355	330550-3954	1		434
Art.3355	330551-00	1	12	434
Art.3355	330551-30	1		434
Art.3355	330551-39	1	12	434
Art.3355	330551-0054	1		434

Art. / Acc.	Code	px n° pack	px n° pallet	pag.
Art.3355	330551-3028	1		434
Art.3355	330551-3954	1		434
Art.3360	330563-00	1	12	421
Art.3360	330563-30	1		421
Art.3360	330563-39	1	12	421
Art.3360	330563-0054	1		421
Art.3360	330563-3028	1		421
Art.3360	330563-3954	1		421
Art.3360	330564-00	1	12	421
Art.3360	330564-30	1		421
Art.3360	330564-39	1	12	421
Art.3360	330564-0054	1		421
Art.3360	330564-3028	1		421
Art.3360	330564-3954	1		421
Art.3361	330573-00	1	6	425
Art.3361	330574-00	1	6	424
Art.3362	330583-00	1	6	425
Art.3362	330584-00	1	6	424
Art.3363	330593-00	1	12	421
Art.3363	330593-30	1		421
Art.3363	330593-39	1	12	421
Art.3363	330593-0054	1		421
Art.3363	330593-3028	1		421
Art.3363	330593-3954	1		421
Art.3363	330594-00	1	12	421
Art.3363	330594-30	1		421
Art.3363	330594-39	1	12	421
Art.3363	330594-0054	1		421
Art.3363	330594-3028	1		421
Art.3363	330594-3954	1		421
Art.3365	330585-00	1		501
Art.3365	330587-00	1		501
Art.3366	330586-00	1		501
Art.3366	330588-00	1		501
Art.3370	340250-00	1	15	550
Art.3370	340250-39	1	15	550
Art.3370	340251-00	1	15	550
Art.3370	340251-39	1	15	550
Art.3370	340252-00	1	15	550
Art.3370	340252-39	1	15	550
Art.3374	340260-00	1	15	550
Art.3374	340260-39	1	15	550
Art.3374	340261-00	1	15	550
Art.3374	340261-39	1	15	550
Art.3374	340262-00	1	15	550
Art.3374	340262-39	1	15	550
Art.3375	340200-00	1	30	547
Art.3375	340200-39	1	30	547
Art.3375	340201-00	1	30	547
Art.3375	340201-39	1	30	547
Art.3375	340202-00	1	30	547
Art.3375	340202-39	1	30	547
Art.3375	340203-00	1	30	547
Art.3375	340203-39	1	30	547
Art.3380	340500-00	1		570
Art.3380	340500-39	1		570
Art.3380	340501-00	1		570
Art.3380	340501-39	1		570
Art.3380	340502-00	1		570
Art.3380	340502-39	1		570
Art.3380	340503-00	1		570
Art.3380	340503-39	1		570
Art.3380	340504-00	1		570
Art.3380	340504-39	1		570
Art.3380	340505-00	1		570
Art.3380	340505-39	1		570
Art.3381	340510-00	1		571
Art.3381	340510-39	1		571
Art.3381	340511-00	1		571
Art.3381	340511-39	1		571
Art.3381	340512-00	1		571
Art.3381	340512-39	1		571
Art.3381	340513-00	1		571
Art.3381	340513-39	1		571
Art.3381	340514-00	1		571
Art.3381	340514-39	1		571
Art.3381	340515-00	1		571
Art.3381	340515-39	1		571
Art.3382	340520-00	1		571
Art.3382	340520-39	1		571
Art.3382	340521-00	1		571
Art.3382	340521-39	1		571
Art.3382	340522-00	1		571
Art.3382	340522-39	1		571
Art.3382	340523-00	1		571
Art.3382	340523-39	1		571
Art.3382	340524-00	1		571
Art.3382	340524-39	1		571
Art.3382	340525-00	1		571
Art.3382	340525-39	1		571
Art.3383	340552-00	1	12	428
Art.3383	340552-30	1		428
Art.3383	340552-39	1	12	428
Art.3383	340552-0054	1		428
Art.3383	340552-3028	1		428
Art.3383	340552-3954	1		428
Art.3383	340553-00	1	12	428
Art.3383	340553-30	1		428
Art.3383	340553-39	1	12	428
Art.3383	340553-0054	1		428
Art.3383	340553-3028	1		428
Art.3383	340553-3954	1		428
Art.3384	340560-00	1	12	428
Art.3384	340560-30	1	12	428
Art.3384	340560-39	1	12	428
Art.3384	340560-0054	1		428
Art.3384	340560-3028	1		428
Art.3384	340560-3954	1		428
Art.3384	340561-00	1	12	428
Art.3384	340561-30	1		428
Art.3384	340561-39	1	12	428
Art.3384	340561-0054	1		428
Art.3384	340561-3028	1		428
Art.3384	340561-3954	1		428
Art.3385	340570-00	1	12	429
Art.3385	340570-30	1		429
Art.3385	340570-39	1	12	429
Art.3385	340570-0054	1		429
Art.3385	340570-3028	1		429
Art.3385	340570-3954	1		429
Art.3385	340572-00	1	12	429
Art.3385	340572-30	1		429
Art.3385	340572-39	1	12	429
Art.3385	340572-0054	1		429
Art.3385	340572-3028	1		429
Art.3385	340572-3954	1		429
Art.3386	340580-00	1	12	429
Art.3386	340580-30	1	12	429
Art.3386	340580-39	1	12	429

Index

Art. / Acc.	Code disano	px n° pack	px n° pallet	pag.
Art.3386	340580-0054	1		429
Art.3386	340580-3028	1		429
Art.3386	340580-3954	1		429
Art.3386	340581-00	1	12	429
Art.3386	340581-30	1		429
Art.3386	340581-39	1	12	429
Art.3386	340581-0054	1		429
Art.3386	340581-3028	1		429
Art.3386	340581-3954	1		429
Art.3390	330800-00	1	15	541
Art.3390	330800-39	1	15	541
Art.3390	330801-00	1	15	541
Art.3390	330801-39	1	15	541
Art.3390	330802-00	1		541
Art.3390	330802-39	1	15	541
Art.3390	330803-00	1	15	541
Art.3390	330803-39	1	15	541
Art.3390	330804-00	1	15	541
Art.3390	330804-39	1	15	541
Art.3390	330805-00	1	15	541
Art.3390	330805-39	1	15	541
Art.3391	330810-00	1	15	541
Art.3391	330810-39	1	15	541
Art.3391	330811-00	1	15	541
Art.3391	330811-39	1	15	541
Art.3391	330812-00	1	15	541
Art.3391	330812-39	1	15	541
Art.3391	330813-00	1	15	541
Art.3391	330813-39	1	15	541
Art.3391	330814-00	1	15	541
Art.3391	330814-39	1	15	541
Art.3391	330815-00	1	15	541
Art.3391	330815-39	1	15	541
Art.3392	330860-00	1	15	543
Art.3392	330860-39	1	15	543
Art.3392	330861-00	1		543
Art.3392	330861-39	1		543
Art.3392	330862-00	1		543
Art.3392	330862-39	1		543
Art.3392	330864-00	1	15	543
Art.3392	330864-39	1	15	543
Art.3392	330865-00	1	15	543
Art.3392	330865-39	1	15	543

Art. / Acc.	Code disano	px n° pack	px n° pallet	pag.
Art.3392	330866-00	1	15	543
Art.3392	330866-39	1	15	543
Art.3393	330880-00	1	15	543
Art.3393	330880-39	1	15	543
Art.3393	330881-00	1		543
Art.3393	330881-39	1		543
Art.3393	330882-00	1		543
Art.3393	330882-39	1		543
Art.3393	330884-00	1	15	543
Art.3393	330884-39	1	15	543
Art.3393	330885-00	1	15	543
Art.3393	330885-39	1	15	543
Art.3393	330886-00	1	15	543
Art.3393	330886-39	1	15	543
Art.3395	330820-00	1	15	542
Art.3395	330820-39	1	15	542
Art.3395	330821-00	1	15	542
Art.3395	330821-39	1	15	542
Art.3395	330822-00	1	15	542
Art.3395	330822-39	1	15	542
Art.3395	330824-00	1	15	542
Art.3395	330824-39	1	15	542
Art.3395	330825-00	1	15	542
Art.3395	330825-39	1	15	542
Art.3395	330826-00	1	15	542
Art.3395	330826-39	1	15	542
Art.3396	330830-00	1	15	542
Art.3396	330831-00	1	15	542
Art.3396	330832-00	1	15	542
Art.3396	330833-00	1	15	542
Art.3396	330834-00	1	15	542
Art.3396	330835-00	1	15	542
Art.3460	340000-00	1	48	558
Art.3460	340000-30	1		558
Art.3460	340000-39	1	48	558
Art.3460	340000-0054	1		558
Art.3460	340000-3028	1		558
Art.3460	340000-3954	1		558
Art.3460	340001-00	1	48	558
Art.3460	340001-30	1		558
Art.3460	340001-39	1	48	558
Art.3460	340001-0054	1		558
Art.3460	340001-3028	1		558

Art. / Acc.	Code disano	px n° pack	px n° pallet	pag.
Art.3460	340001-3954	1		558
Art.3460	340002-00	1	48	558
Art.3460	340002-30	1		558
Art.3460	340002-0054			558
Art.3460	340003-00	1	48	558
Art.3460	340003-30	1		558
Art.3460	340003-0054	1		558
Art.3460	340020-00-0090-LM	1		560
Art.3460	340020-00-0110-LM	1		560
Art.3460	340020-00-0130-LM	1		560
Art.3460	340020-00-0155-LM	1		560
Art.3460	340020-00-0175-LM	1		560
Art.3460	340020-0054-0090-LM	1		560
Art.3460	340020-39-0090-LM	1		560
Art.3460	340020-39-0110-LM	1		560
Art.3460	340020-39-0130-LM	1		560
Art.3460	340020-39-0155-LM	1		560
Art.3460	340020-39-0175-LM	1		560
Art.3460	340020-3954-0090-LM	1		560
Art.3460	340021-00-0135-LM	1		560
Art.3460	340021-00-0150-LM	1		560
Art.3460	340021-00-0180-LM	1		560
Art.3460	340021-00-0210-LM	1		560
Art.3460	340021-0054-0135-LM	1		560
Art.3460	340021-39-0135-LM	1		560
Art.3460	340021-39-0150-LM	1		560
Art.3460	340021-39-0180-LM	1		560
Art.3460	340021-39-0210-LM	1		560
Art.3460	340021-3954-0135-LM	1		560
Art.3460	340040-00-0090-LW	1		561
Art.3460	340040-00-0110-LW	1		561
Art.3460	340040-00-0130-LW	1		561

Art. / Acc.	Code disano	px n° pack	px n° pallet	pag.
Art.3460	340040-00-0155-LW	1		561
Art.3460	340040-00-0175-LW	1		561
Art.3460	340040-0054-0090-LW	1		561
Art.3460	340040-39-0090-LW	1		561
Art.3460	340040-39-0110-LW	1		561
Art.3460	340040-39-0130-LW	1		561
Art.3460	340040-39-0155-LW	1		561
Art.3460	340040-39-0175-LW	1		561
Art.3460	340040-3954-0090-LW	1		561
Art.3460	340041-00-0135-LW	1		561
Art.3460	340041-00-0150-LW	1		561
Art.3460	340041-00-0180-LW	1		561
Art.3460	340041-00-0210-LW	1		561
Art.3460	340041-0054-0135-LW	1		561
Art.3460	340041-39-0135-LW	1		561
Art.3460	340041-39-0150-LW	1		561
Art.3460	340041-39-0180-LW	1		561
Art.3460	340041-39-0210-LW	1		561
Art.3460	340041-3954-0135-LW	1		561
Art.3460	340060-00-0100-LP	1		562
Art.3460	340060-00-0125-LP	1		562
Art.3460	340060-00-0155-LP	1		562
Art.3460	340060-00-0175-LP	1		562
Art.3460	340060-00-0205-LP	1		562
Art.3460	340060-0054-0100-LP	1		562
Art.3460	340060-39-0100-LP	1		562
Art.3460	340060-39-0125-LP	1		562
Art.3460	340060-39-0155-LP	1		562
Art.3460	340060-39-0175-LP	1		562
Art.3460	340060-39-0205-LP	1		562
Art.3460	340060-3954-0100-LP	1		562
Art.3460	340061-00-0150-LP	1		562
Art.3460	340061-00-0170-LP	1		562
Art.3460	340061-00-0200-LP	1		562
Art.3460	340061-00-0235-LP	1		562
Art.3460	340061-00-0253-LP	1		562
Art.3460	340061-0054-0150-LP	1		562
Art.3460	340061-39-0150-LP	1		562
Art.3460	340061-39-0170-LP	1		562
Art.3460	340061-39-0200-LP	1		562
Art.3460	340061-39-0235-LP	1		562
Art.3460	340061-39-0253-LP	1		562
Art.3460	340061-3954-0150-LP	1		562
Art.3461	340010-00	1	42	559
Art.3461	340010-30	1		559
Art.3461	340010-39	1	42	559
Art.3461	340010-0054			559
Art.3461	340010-3028	1		559
Art.3461	340010-3954	1		559
Art.3461	340011-00	1	42	559
Art.3461	340011-30	1		559
Art.3461	340011-39	1	42	559
Art.3461	340011-0054	1		559
Art.3461	340011-3028	1		559
Art.3461	340011-3954	1		559
Art.3461	340012-00	1		559
Art.3461	340012-30	1		559
Art.3461	340012-0054	1		559
Art.3461	340013-00	1		559
Art.3461	340013-30	1		559
Art.3461	340013-0054	1		559
Art.3461	340027-00-0155-T3	1		566
Art.3461	340027-0054-0155-T3	1		566
Art.3461	340027-39-0155-T3	1		566
Art.3461	340027-3954-0155-T3	1		566
Art.3461	340028-00-0190-T3	1		566
Art.3461	340028-0054-0190-T3	1		566
Art.3461	340028-39-0190-T3	1		566
Art.3461	340028-39-0260-T3	1		566
Art.3461	340028-3954-0190-T3	1		566
Art.3461	340029-00-0275-T3	1		566
Art.3461	340029-00-0525-T3	1		566
Art.3461	340029-0054-0275-T3	1		566
Art.3461	340029-39-0275-T3	1		566
Art.3461	340029-39-0525-T3	1		566
Art.3461	340029-3954-0275-T3	1		566
Art.3461	340035-00-0175-ME	1		565
Art.3461	340035-00-0230-ME	1		565
Art.3461	340035-00-0250-ME	1		565
Art.3461	340035-0054-0175-ME	1		565
Art.3461	340035-39-0175-ME	1		565
Art.3461	340035-39-0200-ME	1		565
Art.3461	340035-39-0230-ME	1		565
Art.3461	340035-39-0250-ME	1		565
Art.3461	340035-3954-0175-ME	1		565
Art.3461	340036-00-0200-ME	1		565
Art.3461	340036-00-0235-ME	1		565
Art.3461	340036-00-0270-ME	1		565
Art.3461	340036-00-0310-ME	1		565
Art.3461	340036-0054-0200-ME	1		565
Art.3461	340036-39-0200-ME	1		565
Art.3461	340036-39-0235-ME	1		565
Art.3461	340036-39-0270-ME	1		565
Art.3461	340036-39-0310-ME	1		565
Art.3461	340036-3954-0200-ME	1		565

Art. / Acc.	Code	px n° pack	px n° pallet	pag.
Art.3462	340050-00-0080-T2C	1		562
Art.3462	340050-00-0090-T2C	1		562
Art.3462	340050-00-0110-T2C	1		562
Art.3462	340050-00-0130-T2C	1		562
Art.3462	340050-00-0155-T2C	1		562
Art.3462	340050-00-0175-T2C	1		562
Art.3462	340050-0054-0080-T2C	1		562
Art.3462	340050-39-0080-T2C	1		562
Art.3462	340050-39-0090-T2C	1		562
Art.3462	340050-39-0110-T2C	1		562
Art.3462	340050-39-0130-T2C	1		562
Art.3462	340050-39-0155-T2C	1		562
Art.3462	340050-39-0175-T2C	1		562
Art.3462	340050-3954-0080-T2C	1		562
Art.3462	340051-00-0135-T2C	1		562
Art.3462	340051-00-0150-T2C	1		562
Art.3462	340051-0054-0135-T2C	1		562
Art.3462	340051-39-0135-T2C	1		562
Art.3462	340051-39-0150-T2C	1		562
Art.3462	340051-3954-0135-T2C	1		562
Art.3463	340030-00-0090-ME	1		561
Art.3463	340030-00-0110-ME	1		561
Art.3463	340030-00-0130-ME	1		561
Art.3463	340030-00-0155-ME	1		561
Art.3463	340030-00-0175-ME	1		561
Art.3463	340030-0054-0090-ME	1		561
Art.3463	340030-39-0090-ME	1		561
Art.3463	340030-39-0110-ME	1		561
Art.3463	340030-39-0130-ME	1		561
Art.3463	340030-39-0155-ME	1		561
Art.3463	340030-39-0175-ME	1		561
Art.3463	340030-3954-0090-ME	1		561
Art.3463	340031-00-0135-ME	1		561
Art.3463	340031-00-0150-ME	1		561
Art.3463	340031-00-0180-ME	1		561
Art.3463	340031-00-0210-ME	1		561
Art.3463	340031-0054-0135-ME	1		561
Art.3463	340031-39-0135-ME	1		561
Art.3463	340031-39-0150-ME	1		561
Art.3463	340031-39-0180-ME	1		561
Art.3463	340031-39-0210-ME	1		561
Art.3463	340031-3954-0135-ME	1		561
Art.3463	340080-00-0130-PD	1		563
Art.3463	340080-00-0175-PD	1		563
Art.3463	340080-0054-0130-PD	1		563
Art.3463	340080-39-0130-PD	1		563
Art.3463	340080-39-0175-PD	1		563
Art.3463	340080-3954-0130-PD	1		563
Art.3464	340081-00-0130-PS	1		563
Art.3464	340081-00-0175-PS	1		563
Art.3464	340081-0054-0130-PS	1		563
Art.3464	340081-39-0130-PS	1		563
Art.3464	340081-39-0175-PS	1		563
Art.3464	340081-3954-0130-PS	1		563
Art.3465	340070-00-0175-FTW	1		560
Art.3465	340070-0054-0175-FTW	1		560
Art.3465	340070-39-0175-FTW	1		560
Art.3465	340070-3954-0175-FTW	1		560
Art.3465	340071-00-0150-FTW	1		560
Art.3465	340071-00-0180-FTW	1		560
Art.3465	340071-00-0210-FTW	1		560
Art.3465	340071-0054-0150-FTW	1		560
Art.3465	340071-39-0150-FTW	1		560
Art.3465	340071-39-0180-FTW	1		560
Art.3465	340071-39-0210-FTW	1		560
Art.3465	340071-3954-0150-FTW	1		560
Art.3466	340075-00-0175-FTW	1		566
Art.3466	340075-00-0230-FTW	1		566
Art.3466	340075-00-0250-FTW	1		566
Art.3466	340075-0054-0175-FTW	1		566
Art.3466	340075-39-0175-FTW	1		566
Art.3466	340075-39-0200-FTW	1		566
Art.3466	340075-39-0230-FTW	1		566
Art.3466	340075-39-0250-FTW	1		566
Art.3466	340075-3954-0175-FTW	1		566
Art.3466	340076-00-0200-FTW	1		566
Art.3466	340076-00-0235-FTW	1		566
Art.3466	340076-00-0270-FTW	1		566
Art.3466	340076-00-0310-FTW	1		566
Art.3466	340076-00-0345-FTW	1		566
Art.3466	340076-00-0370-FTW	1		566
Art.3466	340076-00-0420-FTW	1		566
Art.3466	340076-0054-0200-FTW	1		566
Art.3466	340076-39-0200-FTW	1		566
Art.3466	340076-39-0235-FTW	1		566
Art.3466	340076-39-0270-FTW	1		566
Art.3466	340076-39-0310-FTW	1		566
Art.3466	340076-39-0345-FTW	1		566
Art.3466	340076-39-0370-FTW	1		566
Art.3466	340076-39-0420-FTW	1		566

Art. / Acc.	Code disano	px n° pack	px n° pallet	pag.
Art.3466	340076-3954-0200-FTW	1		566
Art.3467	340085-00-0170-PD	1		567
Art.3467	340085-00-0235-PD	1		567
Art.3467	340085-0054-0170-PD	1		567
Art.3467	340085-39-0170-PD	1		567
Art.3467	340085-39-0200-PD	1		567
Art.3467	340085-39-0235-PD	1		567
Art.3467	340085-3954-0170-PD	1		567
Art.3467	340086-00-0175-PD	1		567
Art.3467	340086-00-0230-PD	1		567
Art.3467	340086-0054-0175-PD	1		567
Art.3467	340086-39-0175-PD	1		567
Art.3467	340086-39-0230-PD	1		567
Art.3467	340086-3954-0175-PD	1		567
Art.3467	340087-00-0200-PD	1		567
Art.3467	340087-00-0235-PD	1		567
Art.3467	340087-00-0270-PD	1		567
Art.3467	340087-00-0310-PD	1		567
Art.3467	340087-0054-0200-PD	1		567
Art.3467	340087-39-0200-PD	1		567
Art.3467	340087-39-0235-PD	1		567
Art.3467	340087-39-0270-PD	1		567
Art.3467	340087-39-0310-PD	1		567
Art.3467	340087-3954-0200-PD	1		567
Art.3468	340088-00-0170-PS	1		567
Art.3468	340088-00-0235-PS	1		567
Art.3468	340088-0054-0170-PS	1		567
Art.3468	340088-39-0170-PS	1		567
Art.3468	340088-39-0200-PS	1		567
Art.3468	340088-39-0235-PS	1		567
Art.3468	340088-3954-0170-PS	1		567
Art.3468	340089-00-0175-PS	1		567
Art.3468	340089-00-0230-PS	1		567
Art.3468	340089-0054-0175-PS	1		567
Art.3468	340089-39-0175-PS	1		567
Art.3468	340089-39-0230-PS	1		567
Art.3468	340089-3954-0175-PS	1		567
Art.3468	340090-00-0200-PS	1		567
Art.3468	340090-00-0235-PS	1		567
Art.3468	340090-00-0270-PS	1		567
Art.3468	340090-00-0310-PS	1		567
Art.3468	340090-0054-0200-PS	1		567
Art.3468	340090-39-0200-PS	1		567
Art.3468	340090-39-0235-PS	1		567
Art.3468	340090-39-0270-PS	1		567
Art.3468	340090-39-0310-PS	1		567
Art.3468	340090-3954-0200-PS	1		567
Art.3470	340015-00	1	42	559
Art.3470	340015-30	1		559
Art.3470	340015-39	1	42	559
Art.3470	340015-0054	1		559
Art.3470	340015-3028	1		559
Art.3470	340015-3954	1		559
Art.3470	340016-00	1	42	559
Art.3470	340016-30	1		559
Art.3470	340016-39	1		559
Art.3470	340016-0054	1		559
Art.3470	340016-3028	1		559
Art.3470	340016-3954	1		559
Art.3470	340017-00	1		559
Art.3470	340017-30	1		559
Art.3470	340017-39	1		559
Art.3470	340017-0054	1		559
Art.3470	340017-3028	1		559
Art.3470	340017-3954	1		559
Art.3472	341020-00	1	18	525
Art.3472	341020-39	1	18	525
Art.3472	341021-00	1	18	525
Art.3472	341021-39	1	18	525
Art.3472	341022-00	1	18	525
Art.3472	341022-39	1	18	525
Art.3472	341023-00	1	18	525
Art.3472	341023-39	1	18	525
Art.3473	341030-00	1	18	524
Art.3473	341030-39	1	18	524
Art.3473	341031-00	1	18	524
Art.3473	341031-39	1		524
Art.3473	341032-00	1	18	524
Art.3473	341032-39	1		524
Art.3473	341033-00	1	18	524
Art.3473	341033-39	1		524
Art.3474	341110-00	1	18	525
Art.3474	341110-39	1		525
Art.3474	341111-00	1	18	525
Art.3474	341111-39	1		525
Art.3474	341112-00	1	18	525
Art.3474	341112-39	1		525
Art.3474	341113-00	1	18	525
Art.3474	341113-39	1	18	525
Art.3475	331000-00	1	30	511
Art.3475	331000-39	1		511
Art.3475	331001-00	1	30	511
Art.3475	331001-39	1		511
Art.3475	331002-00	1	30	511
Art.3475	331002-39	1		511
Art.3476	331010-00	1	30	511
Art.3476	331010-39	1	30	511
Art.3476	331011-00	1	30	511
Art.3476	331011-39	1	30	511
Art.3476	331012-00	1	30	511
Art.3476	331012-39	1		511
Art.3477	331020-00	1	30	514
Art.3477	331020-39	1		514
Art.3477	331021-00	1	30	514
Art.3477	331021-39	1		514
Art.3477	331022-00	1	30	514
Art.3477	331022-39			514
Art.3478	331030-00	1	30	515

Art. / Acc.	Code disano	px n° pack	px n° pallet	pag.
Art.3478	331030-39	1		515
Art.3478	331031-00	1	30	515
Art.3478	331031-39	1		515
Art.3478	331032-00	1	30	515
Art.3478	331032-39	1	30	515
Art.3479	331040-00	1	30	515
Art.3479	331040-39	1	30	515
Art.3479	331041-00	1	30	515
Art.3479	331041-39	1	30	515
Art.3479	331042-00	1	30	515
Art.3479	331042-39	1		515
Art.3480	331050-00	1	30	512
Art.3480	331050-39	1		512
Art.3480	331051-00	1	30	512
Art.3480	331051-39	1		512
Art.3480	331052-00	1	30	512
Art.3480	331052-39	1	30	512
Art.3481	331060-00	1	30	513
Art.3481	331060-39	1		513
Art.3481	331061-00	1	30	513
Art.3481	331061-39	1		513
Art.3481	331062-00	1	30	513
Art.3481	331062-39	1		513
Art.3482	331070-00	1	30	513
Art.3482	331070-39	1	30	513
Art.3482	331071-00	1	30	513
Art.3482	331071-39	1		513
Art.3482	331072-00	1	30	513
Art.3482	331072-39	1	30	513
Art.3483	331050-44	1	30	518
Art.3483	331051-44	1	30	518
Art.3483	331052-44	1	30	518
Art.3484	331060-44	1	30	519
Art.3484	331061-44	1	30	519
Art.3484	331062-44	1	30	519
Art.3485	331070-44	1	30	519
Art.3485	331071-44	1	30	519
Art.3485	331072-44	1	30	519
Art.3486	331080-00	1	30	517
Art.3486	331080-39	1		517
Art.3486	331081-00	1	30	517
Art.3486	331081-39	1		517
Art.3486	331082-00	1	30	517
Art.3486	331082-39	1		517
Art.3487	331090-00	1	30	517
Art.3487	331090-39	1	30	517
Art.3487	331091-00	1	30	517
Art.3487	331091-39	1		517
Art.3487	331092-00	1	30	517
Art.3487	331092-39	1		517
Art.3490	341040-00	1	18	523
Art.3490	341040-39	1		523
Art.3490	341041-00	1	18	523
Art.3490	341041-39	1		523
Art.3490	341042-00	1	18	523
Art.3490	341042-39	1		523
Art.3490	341043-00	1	18	523
Art.3490	341043-39	1	18	523
Art.3491	341050-00	1	18	523
Art.3491	341050-39	1		523
Art.3491	341051-00	1	18	523
Art.3491	341051-39	1		523
Art.3491	341052-00	1	18	523
Art.3491	341052-39	1		523
Art.3491	341053-00	1	18	523
Art.3491	341053-39	1		523
Art.3492	341060-44	1	18	529
Art.3492	341061-44	1	18	529
Art.3492	341062-44	1	18	529
Art.3492	341063-44	1	18	529
Art.3493	341070-44	1	18	529
Art.3493	341071-44	1	18	529
Art.3493	341072-44	1	18	529
Art.3493	341073-44	1	18	529
Art.3494	341000-00	1	18	528
Art.3494	341000-39	1		528
Art.3494	341001-00	1	18	528
Art.3494	341001-39	1		528
Art.3494	341002-00	1	18	528
Art.3494	341002-39	1		528
Art.3494	341003-00	1	18	528
Art.3494	341003-39	1		528
Art.3495	341010-00	1	18	524
Art.3495	341010-39	1		524
Art.3495	341011-00	1	18	524
Art.3495	341011-39	1		524
Art.3495	341012-00	1	18	524
Art.3495	341012-39	1		524
Art.3495	341013-00	1	18	524
Art.3495	341013-39	1	18	524
Art.3496	341080-00	1	18	527
Art.3496	341080-39	1	18	527
Art.3497	341090-00	1	18	527
Art.3497	341090-39	1	18	527
Art.3562	340025-00-0175-LM	1		564
Art.3562	340025-00-0230-LM	1		564
Art.3562	340025-00-0250-LM	1		564
Art.3562	340025-0054-0175-LM	1		564
Art.3562	340025-39-0175-LM	1		564
Art.3562	340025-39-0200-LM	1		564
Art.3562	340025-39-0230-LM	1		564
Art.3562	340025-39-0250-LM	1		564
Art.3562	340025-3954-0175-LM	1		564
Art.3562	340026-00-0200-LM	1		564
Art.3562	340026-00-0235-LM	1		564
Art.3562	340026-00-0270-LM	1		564
Art.3562	340026-00-0310-LM	1		564
Art.3562	340026-0054-0200-LM	1		564
Art.3562	340026-39-0200-LM	1		564
Art.3562	340026-39-0235-LM	1		564
Art.3562	340026-39-0270-LM	1		564
Art.3562	340026-39-0310-LM	1		564
Art.3562	340026-3954-0200-LM	1		564
Art.3564	340045-00-0175-LW	1		565
Art.3564	340045-00-0230-LW	1		565
Art.3564	340045-00-0250-LW	1		565
Art.3564	340045-0054-0175-LW	1		565
Art.3564	340045-39-0175-LW	1		565

Art. / Acc.	Code	px n° pack	px n° pallet	pag.
Art.3564	340045-39-0200-LW	1		565
Art.3564	340045-39-0230-LW	1		565
Art.3564	340045-39-0250-LW	1		565
Art.3564	340045-3954-0175-LW	1		565
Art.3564	340046-00-0200-LW	1		565
Art.3564	340046-00-0235-LW	1		565
Art.3564	340046-00-0270-LW	1		565
Art.3564	340046-00-0310-LW	1		565
Art.3564	340046-0054-0200-LW	1		565
Art.3564	340046-39-0200-LW	1		565
Art.3564	340046-39-0235-LW	1		565
Art.3564	340046-39-0270-LW	1		565
Art.3564	340046-39-0310-LW	1		565
Art.3564	340046-3954-0200-LW	1		565
Art.3580	424600-2168	1		468
Art.3580	424600-3968	1		468
Art.3580	424602-2168	1		468
Art.3580	424602-3968	1		468
Art.3581	424610-00	1	15	468
Art.3581	424610-2168	1		468
Art.3581	424610-3968	1		468
Art.3581	424611-00	1	15	468
Art.3581	424611-39	1	15	468
Art.3581	424612-2168	1		468
Art.3581	424612-3968	1		468
Art.3581	424613-00	1	15	468
Art.3581	424613-39	1	15	468
Art.3582	424620-2168	1		469
Art.3582	424620-3968	1		469
Art.3582	424621-00	1	15	469
Art.3582	424622-2168	1		469
Art.3582	424622-3968	1		469
Art.3582	424623-00	1	15	469
Art.3583	424630-39	1	15	469
Art.3583	424630-2168	1		469
Art.3583	424630-3968	1		469
Art.3583	424631-00	1	15	469
Art.3583	424632-00	1	15	469
Art.3583	424632-2168	1		469
Art.3583	424632-3968	1		469
Art.3583	424633-00	1	15	469
Art.3584	424640-00	1	15	471
Art.3584	424640-39	1	15	471
Art.3584	424641-00	1	15	471
Art.3584	424641-39	1	15	471
Art.3585	424650-00	1	15	471
Art.3585	424650-39	1	15	471
Art.3585	424651-00	1	15	471
Art.3585	424651-39	1	15	471
Art.3590	424660-00	1	18	408
Art.3590	424660-30	1	18	412
Art.3590	424660-39	1	18	408
Art.3590	424660-0054	1		408
Art.3590	424660-3028	1		412
Art.3590	424660-3954	1		408
Art.3590	424660-00-0510-RW	1		408
Art.3590	424660-00-0660-RW	1		408
Art.3590	424660-30-0510-RW	1		412
Art.3590	424660-30-0660-RW	1		412
Art.3590	424660-3028-0420-RW	1		412
Art.3590	424660-3028-0510-RW	1		412
Art.3590	424660-3028-0660-RW	1		412
Art.3590	424660-39-0420-RW	1		408
Art.3590	424660-39-0510-RW	1		408
Art.3590	424660-39-0660-RW	1		408
Art.3590	424661-00	1	18	408
Art.3590	424661-30	1	18	412
Art.3590	424661-39	1	18	408
Art.3590	424661-0054	1		408
Art.3590	424661-3028	1		412
Art.3590	424661-3954	1		408
Art.3591	424670-00	1	18	409
Art.3591	424670-30	1	18	413
Art.3591	424670-0054	1		409
Art.3591	424670-73	1	18	409
Art.3591	424670-7330	1		413
Art.3591	424670-7354	1		409
Art.3591	424671-00	1	18	409
Art.3591	424671-30	1	18	413
Art.3591	424671-0054	1		409
Art.3592	424680-00	1	18	409
Art.3592	424680-30	1	18	413
Art.3592	424680-39	1	18	409
Art.3592	424680-0054	1		409
Art.3592	424680-3028	1	18	413
Art.3592	424680-3954	1		409
Art.3592	424680-00-0320-SW	1		409
Art.3592	424680-00-0440-SW	1		409
Art.3592	424680-30-0320-SW	1		413
Art.3592	424680-30-0440-SW	1		413
Art.3592	424680-3028-0280-SW	1		413
Art.3592	424680-3028-0320-SW	1		413
Art.3592	424680-3028-0440-SW	1		413
Art.3592	424680-39-0280-SW	1		409
Art.3592	424680-39-0320-SW	1		409
Art.3592	424680-39-0440-SW	1		409
Art.3592	424681-00	1	18	409
Art.3592	424681-30	1	18	413
Art.3592	424681-39	1	18	409
Art.3592	424681-0054	1		409
Art.3592	424681-3028	1	18	413
Art.3592	424681-3954	1		409
Art.3593	424690-00-0280-CA	1		410
Art.3593	424690-00-0340-CA	1		410
Art.3593	424690-00-0450-CA	1		410
Art.3593	424690-00-0480-CA	1		410
Art.3593	424690-0054-0280-CA	1		410
Art.3593	424690-30-0280-CA	1		414
Art.3593	424690-30-0340-CA	1		414
Art.3593	424690-30-0450-CA	1		414
Art.3593	424690-30-0480-CA	1		414

Index

Art. / Acc.	Code disano	px n° pack	px n° pallet	pag.
Art.3593	424690-3028-0280-CA	1		414
Art.3593	424690-3028-0340-CA	1		414
Art.3593	424690-3028-0450-CA	1		414
Art.3593	424690-3028-0480-CA	1		414
Art.3593	424690-39-0280-CA	1		410
Art.3593	424690-39-0340-CA	1		410
Art.3593	424690-39-0450-CA	1		410
Art.3593	424690-39-0480-CA	1		410
Art.3593	424690-3954-0280-CA	1		410
Art.3594	424700-00-0280-CS	1		410
Art.3594	424700-00-0340-CS	1		410
Art.3594	424700-00-0450-CS	1		410
Art.3594	424700-00-0480-CS	1		410
Art.3594	424700-0054-0280-CS	1		410
Art.3594	424700-30-0280-CS	1		414
Art.3594	424700-30-0340-CS	1		414
Art.3594	424700-30-0450-CS	1		414
Art.3594	424700-30-0480-CS	1		414
Art.3594	424700-3028-0280-CS	1		414
Art.3594	424700-3028-0340-CS	1		414
Art.3594	424700-3028-0450-CS	1		414
Art.3594	424700-3028-0480-CS	1		414
Art.3594	424700-39-0280-CS	1		410
Art.3594	424700-39-0340-CS	1		410
Art.3594	424700-39-0450-CS	1		410
Art.3594	424700-39-0480-CS	1		410
Art.3594	424700-3954-0280-CS	1		410
Art.3595	424710-00-0280-AM	1		411
Art.3595	424710-00-0340-AM	1		411
Art.3595	424710-00-0450-AM	1		411

Art. / Acc.	Code disano	px n° pack	px n° pallet	pag.
Art.3595	424710-00-0480-AM	1		411
Art.3595	424710-0054-0280-AM	1		411
Art.3595	424710-30-0280-AM	1		415
Art.3595	424710-30-0340-AM	1		415
Art.3595	424710-30-0450-AM	1		415
Art.3595	424710-30-0480-AM	1		415
Art.3595	424710-3028-0280-AM	1		415
Art.3595	424710-3028-0340-AM	1		415
Art.3595	424710-3028-0450-AM	1		415
Art.3595	424710-3028-0480-AM	1		415
Art.3595	424710-39-0280-AM	1		411
Art.3595	424710-39-0340-AM	1		411
Art.3595	424710-39-0450-AM	1		411
Art.3595	424710-39-0480-AM	1		411
Art.3595	424710-3954-0280-AM	1		411
Art.3596	424720-00-0340-AW	1		411
Art.3596	424720-00-0450-AW	1		411
Art.3596	424720-00-0480-AW	1		411
Art.3596	424720-0054-0450-AW	1		411
Art.3596	424720-30-0340-AW	1		415
Art.3596	424720-30-0450-AW	1		415
Art.3596	424720-30-0480-AW	1		415
Art.3596	424720-3028-0280-AW	1		415
Art.3596	424720-3028-0340-AW	1		415
Art.3596	424720-3028-0450-AW	1		415
Art.3596	424720-3028-0480-AW	1		415
Art.3596	424720-39-0280-AW	1		411
Art.3596	424720-39-0340-AW	1		411
Art.3596	424720-39-0450-AW	1		411
Art.3596	424720-39-0480-AW	1		411

Art. / Acc.	Code disano	px n° pack	px n° pallet	pag.
Art.3596	424720-3954-0450-AW	1		411
Art.3691	424770-00-0110-RM	1	51	407
Art.3691	424770-0054-0110-RM	1		407
Art.3691	424770-39-0110-RM	1	51	407
Art.3691	424770-3954-0110-RM	1		407
Art.3691	424770-73-0110-RM	1	51	407
Art.3691	424770-7354-0110-RM	1		407
Art.3691	424771-00-0220-RM	1	51	407
Art.3691	424771-39-0220-RM	1	51	407
Art.3691	424771-73-0220-RM	1	51	407
Art.3691	424772-00-0440-RM	1	51	407
Art.3691	424772-39-0440-RM	1	51	407
Art.3691	424772-73-0440-RM	1	51	407
Art.3691	424773-00-0280-RM	1	51	407
Art.3691	424773-39-0280-RM	1	51	407
Art.3691	424773-73-0280-RM	1	51	407
Art.3692	424780-00-0110-CA	1	51	406
Art.3692	424780-0054-0110-CA	1		406
Art.3692	424780-39-0110-CA	1	51	406
Art.3692	424780-3954-0110-CA	1		406
Art.3692	424780-73-0110-CA	1	51	406
Art.3692	424780-7354-0110-CA	1		406
Art.3692	424781-00-0220-CA	1	51	406
Art.3692	424781-39-0220-CA	1	51	406
Art.3692	424781-73-0220-CA	1	51	406
Art.3692	424782-00-0440-CA	1	51	406
Art.3692	424782-39-0440-CA	1	51	406
Art.3692	424782-73-0440-CA	1	51	406
Art.3692	424783-00-0280-CA	1	51	406
Art.3692	424783-39-0280-CA	1	51	406

Art. / Acc.	Code	px n° pack	px n° pallet	pag.
Art.3692	424783-73-0280-CA	1	51	406
Art.3696	424750-00-0110-AW	1	51	407
Art.3696	424750-0054-0110-AW	1		407
Art.3696	424750-39-0110-AW	1	51	407
Art.3696	424750-3954-0110-AW	1		407
Art.3696	424750-73-0110-AW	1	51	407
Art.3696	424750-7354-0110-AW	1		407
Art.3696	424751-00-0220-AW	1	51	407
Art.3696	424751-39-0220-AW	1	51	407
Art.3696	424751-73-0220-AW	1	51	407
Art.3696	424752-00-0440-AW	1	51	407
Art.3696	424752-39-0440-AW	1	51	407
Art.3696	424752-73-0440-AW	1	51	407
Art.3696	424753-00-0280-AW	1	51	407
Art.3696	424753-39-0280-AW	1	51	407
Art.3696	424753-73-0280-AW	1	51	407
Art.3877	145170-00	1	52	69
Art.3877	145171-00	1	52	69
Art.3877	145172-00	1	52	69
Art.3877	145173-00	1	52	69
Art.3878	145180-00	1	52	69
Art.3878	145181-00	1	52	69
Art.3878	145182-00	1	52	69
Art.3878	145183-00	1	52	69
Art.6001	132960-00	2	150	150
Art.6001	132961-00	2	150	150
Art.6001	13296146011138	2		150
Art.6001	132965-00	2	150	150
Art.6001	132966-00	2	150	150
Art.6001	13296600010923	2		150
Art.6002	13296046000200	2		150
Art.6002	13296046002265	2		150
Art.6002	13296100002021	2		150
Art.6002	13296100002265	2		150
Art.6002	13296100002266	2		150
Art.6002	13296100002267	2		150
Art.6002	13296546000199	2		150
Art.6002	13296546002265	2		150
Art.6002	13296600002022	2		150
Art.6002	13296600002023	2		150
Art.6002	13296600002025	2		150
Art.6002	13296600002268	2		150
Art.6003	132970-00	2	150	150
Art.6003	132971-00	2	150	150
Art.6003	132972-00	2	150	150
Art.6003	132975-00	2	150	150
Art.6003	132976-00	2	150	150
Art.6003	132977-00	2	150	150
Acc.6005	132901-00	6	108	159
Acc.6010	132902-00	50	200	159
Acc.6011	132907-00	32		159
Acc.6015	132903-00	50		159
Acc.6020	132904-00	10		159
Art.6021	132980-00	2	150	140
Art.6021	132981-00	2	150	140
Art.6021	132982-00	2		140
Art.6022	132984-00	2		140
Art.6022	132986-00	2		140
Art.6022	132990-00	2		140
Art.6022	132991-00	2		140
Art.6022	132992-00	2		140
Art.6022	132993-00	2		140
Art.6022	132994-00	2		140
Art.6022	132995-00	2		140
Art.6022	132996-00	2		140
Art.6023	132962-00	2	150	140
Art.6023	132963-00	2	150	140
Art.6023	132964-00	2	150	140
Art.6023	132967-00	2	150	140
Art.6023	132968-00	2	150	140
Art.6023	132969-00	2	150	140
Acc.6025	132905-00	10		159
Acc.6030	132906-00	100	500	158
Acc.6036	132987-00	100	500	88, 90, 93, 96, 101, 112
Acc.6045	132909-00	50		159
Acc.6050	132911-00	10		159
Acc.6051	132927-00	50		158
Acc.6052	132928-00	10		158
Acc.6053	132929-00	10		158
Acc.6075	132915-00	10		55, 61
Acc.6076	132916-00	1		55, 59, 61
Acc.6076	132916-00002264	1		55, 59
Acc.6077	132917-00	10		52
Acc.6081	132934-00	50		61
Acc.6082	132932-00	10		61
Acc.6085	132936-00	10		54
Acc.6086	132938-00	50		54
Acc.6087	132942-00	50		54
Acc.6087	132942-68			54
Art.6401	237531-69	3	180	635
Art.6402	237521-00	2	96	157
Art.6402	237522-00	2	48	157
Art.6402	237522-07	2		157
Art.6402	237523-00	2	48	157
Art.6402	237523-07	2		157
Acc.6405	237603-46	20		156
Acc.6405	237613-00	20	180	156
Acc.6405	237617-00	20	180	156
Acc.6405	237624-00	20	180	156
Acc.6405	237625-00	20	180	156
Acc.6411	237619-00	4		156
Acc.6411	237622-00	4		156
Acc.6411	237623-00	4		156
Acc.6412	237729-00	6	288	156
Acc.6412	237730-00	6	144	156
Acc.6412	237731-00	8	144	156
Acc.6413	237732-00	4		156
Acc.6413	237733-00	4		156
Acc.6413	237736-00	4		156
Acc.6414	237764-00	6		156
Acc.6414	237765-00	6		156
Acc.6414	237766-00	12		156
Art.6501	237536-69	1	180	635
Art.6501	238045-69	1	180	635
Art.6502	237541-00	2	96	157
Art.6502	237542-00	2	48	157
Art.6502	237542-07	2		157
Art.6502	237543-00	2	48	157
Art.6502	237543-07	2		157
Acc.6510	993914-00	50		134, 158

Index

Art. / Acc.	Code disano	px n° pack	px n° pallet	pag.
Acc.6512	132930-00	1		134, 158
Art.6606	133062-60	2		147
Art.6606	133062-6007	2		147
Art.6606	133062-6041	2		147
Art.6606	133063-60	2	140	147
Art.6606	133063-6007	2		147
Art.6606	133063-6041	2		147
Art.6610	133100-00	1		149
Art.6611	133005-00	2	140	145
Art.6611	133006-00	2	140	145
Art.6612	133014-00	2	140	146
Art.6612	133015-00	2	140	146
Art.6613	133024-00	2	140	146
Art.6613	133025-00	2	140	146
Art.6614	133034-00	2	140	145
Art.6614	133035-00	2	140	145
Art.6615	133044-00	2	140	144
Art.6615	133045-00	2	140	144
Art.6616	133054-00	2	120	144
Art.6616	133055-00	2	120	144
Acc.6620	994030-00	10		141, 151
Acc.6620	994031-00	10		141, 151
Acc.6620	994031-00001185	10		141, 151
Acc.6621	994032-00	1		141, 151
Acc.6621	994033-00	1		141, 151
Acc.6621	994033-46001135	1		141, 151
Acc.6622	994034-00	1		141, 151
Acc.6622	994035-00	1		141, 151
Acc.6622	994042-00	1		141, 151
Acc.6623	994036-00	1		141, 151
Acc.6623	994037-00	1		141, 151
Acc.6623	994037-46001136	1		141, 151
Acc.6624	994038-00	1		141, 151
Acc.6624	994039-00	1		141, 151
Acc.6624	994044-00	1		141, 151
Acc.6625	994046-00			141, 151
Art.6630	133070-00	1		53
Art.6630	133070-0041	1		53
Art.6630	133070-21009005	1		53
Art.6630	133070-21419005	1		53
Art.6630	133071-00	1		53
Art.6630	133071-0041	1		53
Art.6630	133071-21009005	1		53
Art.6630	133071-21419005	1		53
Art.6631	133029-00	1		60
Art.6631	133030-00	1		60
Art.6631	133031-00	1		60
Art.6631	133084-00	1		60
Art.6631	133085-00	1		60
Art.6633	133090-00	1		56
Art.6633	133090-0041	1		56
Art.6633	133091-00	1		56
Art.6633	133091-0041	1		56
Art.6633	133092-00	1		56
Art.6633	133092-0041	1		56
Art.6633	133093-00	1		56
Art.6633	133094-00	1		56
Art.6634	133064-00	1		57
Art.6634	133064-0041	1		57
Art.6634	133065-00	1		57
Art.6634	133065-0041	1		57
Art.6634	133095-00	1		57
Art.6634	133095-0041	1		57
Art.6634	133096-00	1		57
Art.6634	133096-0041	1		57
Art.6634	133097-00	1		57
Art.6634	133097-0041	1		57
Art.6637	133072-00	1		53
Art.6637	133072-21009005	1		53
Art.6637	133073-00	1		53
Art.6637	133073-21009005	1		53
Art.6638	133074-0072	1		58
Art.6638	133074-3972	1		58
Art.6638	133075-0072	1		58
Art.6638	133075-3972	1		58
Art.6641	133007-00	2	70	138
Art.6641	133008-00	2	70	138
Art.6642	133017-00	2	70	139
Art.6642	133018-00	2	70	139
Art.6643	133027-00	2	70	139
Art.6643	133028-00	2	70	139
Art.6644	133037-00	2	70	139
Art.6644	133038-00	2	70	139
Art.6645	133047-00	2	70	138
Art.6645	133048-00	2	70	138
Art.6646	133067-00	2	60	138
Art.6646	133068-00	2	60	138
Art.6660	134100-00	1		130
Art.6660	134100-0041	1		130
Art.6660	134102-00	1		130
Art.6660	134102-0041	1		130
Art.6660	134104-00	1		130
Art.6660	134104-0041	1		130
Art.6661	134110-00	1		131
Art.6661	134110-0041	1		131
Art.6661	134112-00	1		131
Art.6661	134112-0041	1		131
Art.6661	134114-00	1		131
Art.6661	134114-0041	1		131
Art.6662	134120-00	1		131
Art.6662	134120-0041	1		131
Art.6662	134122-00	1		131
Art.6662	134122-0041	1		131
Art.6662	134124-00	1		131
Art.6662	134124-0041	1		131
Art.6663	134130-00	1		132
Art.6663	134130-0041	1		132
Art.6663	134132-00	1		132
Art.6663	134132-0041	1		132
Art.6663	134134-00	1		132
Art.6663	134134-0041	1		132
Art.6664	134140-00	1		133
Art.6664	134140-0041	1		133
Art.6664	134142-00	1		133
Art.6664	134142-0041	1		133
Art.6664	134144-00	1		133
Art.6664	134144-0041	1		133
Art.6665	134150-00	1		133
Art.6665	134150-0041	1		133
Art.6665	134152-00	1		133
Art.6665	134152-0041	1		133
Art.6665	134154-00	1		133
Art.6665	134154-0041	1		133
Art.6666	134160-00	1		130
Art.6666	134160-0041	1		130
Art.6666	134162-00	1		130
Art.6666	134162-0041	1		130
Art.6666	134164-00	1		130
Art.6666	134164-0041	1		130

Art. / Acc.	Code disano	px n° pack	px n° pallet	pag.
Art.6670	134000-00	1		126
Art.6670	134000-07	1		126
Art.6670	134000-0041	1		126
Art.6670	134002-00	1		126
Art.6670	134002-07	1		126
Art.6670	134002-0041	1		126
Art.6671	134010-00	1	165	127
Art.6671	134010-07	1	165	127
Art.6671	134010-0041	1		127
Art.6671	134012-00	1	165	127
Art.6671	134012-07	1	165	127
Art.6671	134012-0041	1		127
Art.6672	134020-00	1	165	127
Art.6672	134020-07	1	165	127
Art.6672	134020-0041	1		127
Art.6672	134022-00	1	165	127
Art.6672	134022-07	1	165	127
Art.6672	134022-0041	1		127
Art.6673	134030-00	1		128
Art.6673	134030-07	1		128
Art.6673	134030-0041	1		128
Art.6673	134032-00	1		128
Art.6673	134032-07	1		128
Art.6673	134032-0041	1		128
Art.6674	134050-00	1		129
Art.6674	134050-07	1		129
Art.6674	134050-0041	1		129
Art.6674	134052-00	1		129
Art.6674	134052-07	1		129
Art.6674	134052-0041	1		129
Art.6675	134060-00	1		129
Art.6675	134060-07	1		129
Art.6675	134060-0041	1		129
Art.6675	134062-00	1		129
Art.6675	134062-07	1		129
Art.6675	134062-0041	1		129
Art.6676	134070-00	1	165	126
Art.6676	134070-07	1	165	126
Art.6676	134070-0041	1	165	126
Art.6676	134072-00	1	165	126
Art.6676	134072-07	1	165	126
Art.6676	134072-0041	1		126
Acc.6691	994052-00	1		134
Acc.6692	994054-00	1		134
Acc.6693	994056-00	1		134
Acc.6693	994057-00	1		134
Acc.6694	994058-00	50		134
Acc.6695	994060-00	1	165	134
Acc.6695	994062-00	1	165	134
Acc.6696	994065-00	1		134
Acc.6696	994067-00	1		134
Acc.6696	994069-00	1		134
Acc.6696	994071-00	1		134
Acc.6696	994073-00	1		134
Acc.6696	994075-00	1		134
Acc.6696	994077-00	1		134
Acc.6697	994082-00	50		134
Acc.6698	994080-00	50		134
Acc. DISMART 2.0 INTERFACE	81410013	12		166, 189
Acc.ANT	81420161	1		612
Acc.SENS 0-10V MICRO-WAVE	81412783	1		183, 187
Acc.DMX	986562-00	1		615
Acc.DOP CON-TROLLER	986563-00	1		615
Acc.GATEWAY	81410050	12		612
Acc.CON-TROLLER WIFI	81420160	1		612
Acc.BLE DMX CONTROLLER	81420057	12		615
Acc.DMX MINI CONTROLLER	986460-00	1		615
Acc. ANT WIFI DALI2	986445-00	1		611
Acc. ANT WIFI DALI2	986446-00	1		611
Acc.SENSOR M/L DALI2	986451-00	1		611
Acc.SENS 0-10V PIR CASAMBI	81412319	1		183, 187
Acc.SENS 0-10V MICROWAVE CASAMBI	81412779	1		183, 187
Picto EM	995111-00	1		353
Picto EM	995112-00	1		353
Picto EM	995113-00	1		353
Picto EM	995116-00	1		353
Picto EM	995117-00	1		353
Picto EM	995130-00	1		390
Picto EM	995131-00	1		390
Picto EM	995132-00	1		390
Picto EM	995140-00	1		354
Picto EM	995141-00	1		354
Picto EM	995142-00	1		354
Picto EM	995143-00	1		354
Acc.DMX/RDM SPLITTER IP20	986461-00	1		615
Acc.BOX DMX/ RDM SPLITTER IP65	986513-00	1		615
Acc.PC DALI2	986450-00	1		611
Picto	995114-00	1		353
Picto	995115-00	1		353
Picto	995118-00	1		353
Acc.BOX IP65 DMX/RDM	986557-00	1		615
Acc.RMD	81412785	90		77, 183, 187
Acc.RMD	81418618	1		19, 77, 178, 181, 198, 220, 417, 437, 457, 465, 609
Acc.RMD	81420019	12		167
Acc.RMD	81420111	1		175, 181
Acc.SENS 0-10V PIR	81412782	1		183, 187
Acc.TRAS	997660-00	1		372

EUROPEAN CONSUMER SAFETY LABEL

ENEC is a European Mark that demonstrates that an electrical product is compliant with applicable European safety standards and was manufactured by a company that applies a Quality System according to ISO 9000. The ENEC mark is recognized as being equivalent to the individual national marks of the countries that adhere to the agreement and provides a guarantee of product quality.

*ENEC European Certificate of Conformity: PENDING APPROVAL

The ENEC Plus mark certifies that the LED luminaires are compliant and reliable in terms of safety and declared performance.

Please note that the purpose of the EC labelling is to indicate a product's compliance with all applicable standards and to guarantee the right of this product to be marketed directly in all member states of the European Community. The standards to be complied with by lighting fixtures are as follows:
- 2014/30/EU "electromagnetic compatibility"
- 2014/35/EU "low voltage electrical materials"
The group is not liable for any changes made by third parties to its products. For more detailed information, please contact our lighting design support centre.

Quality management system compliant with the requirements of UNI EN ISO 9001.

Environmental management system compliant with the requirements of UNI EN ISO 14001.

Occupational health and safety management system in compliance with UNI EN ISO 45001.

Energy Management System in compliance with UNI EN ISO 45001.

I.M.Q. approval for wired fixture. All fixtures comply with CEI Italian safety standards corresponding to EN60598 European standards.

Registered Design **DM/100271**

The International Bureau of the World Intellectual Property Organization (WIPO) hereby certifies that the particulars given below correspond to the recording made in the International Register of Industrial Designs, at the date of the international registration, under the Hague Agreement Concerning the International Registration of Industrial Designs.

The Zhaga-D4i mark certifies the fixture's compliance with Zhaga Book 18 version 2 specifications for outdoor luminaires and DiiA's D4i specifications for intra-luminaire DALI interface. This joint certification covers all critical features including mechanical adaptation, digital communication, data reporting and power requirements within a single luminaire, ensuring "plug & play" interoperability of luminaires (drivers) and peripherals, such as connectivity nodes.

In the DISANO catalogue, there are some items, generally the more recent ones, that have two numbers (a subcode) at the end of the classical 6-digit code. These subcodes indicate the product type of wiring. Therefore, it is very important when making an order to write the complete DISANO code, including the subcode, which carries the following meaning:

- **-03 =** article designed to fit LED TUBLES
- **-07 =** article supplied with EMergency unit (1h)
- **-09 =** article supplied with electronic+EMergency gear (1h)
- **-12 =** article supplied with DIMM 1-10V wiring
- **-14 =** article supplied with double insulation class
- **-19 =** article supplied with integrated presence and light sensor
- **-22 =** narrow beam version (FS)
- **-23 =** article supplied with integrated wireless technology
- **-24 =** article supplied with integrated DISMART 2.0 light controller
- **-25 =** article supplied with integrated ActiveAhead system
- **-30 =** article with Virtual Midnight
- **-31 =** article supplied with 3-hour emergency unit
- **-38 =** special version article featuring high chemical resistance for environments with high chlorine content (with *conformal coating* treatment).
- **-39 =** article with 3000K LED
- **-40 =** article supplied with Nema Socket
- **-42 =** Techno System fixtures equipped with a special upper cover for the direct mounting to the ceiling
- **-44 =** article with 1750K LED
- **-52 =** article supplied with LOOP-IN wiring
- **-54 =** article supplied with ON/OFF switch
- **-56 =** fixture powered at 350mA
- **-60 =** article with CRI 80 LED
- **-65 =** article with UV-A LED
- **-68 =** article with 4000K LED
- **-69 =** article with UV-C LED
- **-73 =** article with AMBER LED
- **-85 =** article with EMergency predisposition
- **-89 =** article supplied with HCL-WIRELESS system
- **-92 =** article with on/off switch and electric socket
- **-94 =** article supplied with DIMM 1-10V wiring + EMmergency unit (EM) (1h)
- **-95 =** article supplied with an emergency system featuring the standard DALI protocol (inverter only), compatible with all advanced centralised control systems
- **-9541 =** article supplied with DIMM DALI wiring + EMmergency unit (EM) (1h)
- **-0016 =** non-polluting luminous article, the products are manufactured in compliance with regional Italian laws
- **-0024 =** article supplied with TW-BASIC system
- **-0034 =** article with 5700K - CRI 90 LED
- **-0035 =** article with 5700K
- **-6035 =** article with 5700K - CRI>80 LED
- **-0041 =** article with DALI digital dimmable electronic control gear
- **-0045 =** article with PUSH DALI digital dimmable electronic control gear
- **-0050 =** article with emergency wiring with centralized power supply
- **-0054 =** article supplied with Zhaga Socket
- **-0059 =** Techno System fixtures are designed to directly replace Rapid System FL ceiling lamps. The special mounting clip will make relamping quick and easy
- **-0061 =** article supplied with integrated DIMM DALI presence and light sensor
- **-0066 =** article supplied with integrated self-diagnostic
- **-0072 =** special version for continuous line applications
- **-0078 =** article supplied with PLC remote control system
- **-0083 =** article with 6500K LED
- **-0092 =** article with built-in multi-sensor
- **-0093 =** version with IP68 protection with gel watertight system at the bottom of the fixture
- **-1219 =** article supplied with integrated DIMM 1/10V presence and light sensorv

Versions with special LEDs for the **FOOD** industry (*Red Meat, Marbled Meat, Fish, Bread & Pastries e Produce*).
-00000034 = BREAD/CHEESE **-00000036** = MEAT
-00000035 = FRUIT/VEGETABLE **-00000037** = FISH

PRODUCT CODE STRUCTURE

The product code of some families consists of alphanumeric characters that indicate the product's technical features and is structured as follows:

standard code	equipment	current (I out)	optics type
424660	00	0280	RW

The type of optics is identified as follows:

RW: rotosymmetric wide beam optic
RM: rotosymmetric medium beam optic
SW: square wide beam optic
CA: cycle-pedestrian asymmetric optic
CS: cycle-pedestrian symmetric optic
AM: asymmetric medium beam optic
AW: asymmetric wide beam optic

CLD S+L The unit is supplied without power supply + LED.

CLD Electronic power supply with 230/240V - 50/60Hz + LED.

CLD D Electronic dimmable power supply with 230/240V - 50/60Hz (1/10V) + LED.

CLD D-D (DALI) Electronic digital dimmable power supply with 230/240V - 50/60Hz (DALI) + LED..

CLD D-D (PUSH) Electronic digital dimmable power supply with 230/240V - 50/60Hz (PUSH DALI) + LED

CLD E Electronic power supply with 230/240V - 50/60Hz+ EMergency kit + LED.

CLD D-E Electronic dimmable power supply with 230/240V - 50/60Hz (1/10V) + EMergency lighting + LED.

CLD EC The unit is supplied with EMergency wiring with centralized power supply.

CLD PROG The unit is supplied with ADVANCED PROG wiring.

DIMM Fixtures wired with dimming electronic power supply.

DIMM 1-10V Fixtures wired with 1-10V dimming electronic power supply.

DIMM DIG Fixtures wired with DALI digital dimmable electronic power supply.

PUSH DIG Fixtures wired with PUSH DALI digital dimmable electronic power supply.

EM S.A. Fixtures with permanent EMergency circuit (illumination + emergency).

EM S.E. Fixtures with non-permanent EMergency circuit (only emergency).

-95 ED Fixtures with EMergency module based on the DALI protocol.

-0050 EM-EC Permanently mounted fixture, operating in AC/DC mode, with centralized EMergency device, not incorporated into the fixture.

DRIVER AC/DC As standard, the luminaire comes with an AC/DC driver, powered by a centralised EMergency system, which is not incorporated into the fixture.

-0066 AD Fixtures with integrated self-diagnostic.

EM TEST Fixtures with integrated autotest.

new **NEW PRODUCT**

new **PERFORMANCE**
Techniques - Lighting - Photometric

10A Maximum conductor 10A load.

Fixture equipped with a DIP SWITCH driver for THE SETTING OF THE OUTPUT CURRENT.

POWER SWITCH Fixtures equipped with standard POWER switch: with this integrated switch you can select the fixture's total wattage.

CCT SWITCH Fixtures equipped with standard CCT switch: with this integrated switch you can select the desired light colour.

CCT POWER Fixtures equipped with standard CCT/POWER switch: with this integrated switch you can select the desired light colour and the fixture's total wattage.

IP... International Protection: the IP prefix followed by two figures indicates the level of resistance of the fixture to penetration by solids and liquids. Protection rating (published in EN60529) parts.

IP20 Protection against solid bodies Ø >12 mm only.

IP23 Protection against solid bodies Ø >12 mm and rain.

IP40 Protection against solid bodies Ø > 1 mm only.

IP43 Protection against solid bodies Ø > 1 mm and rain.

IP44 Protection against solid bodies Ø > 1 mm and water sprays.

IP54 Protection against dust and water sprays

IP55 Protection against dust and water jets.

IP65 Protection against dust and water sprays.

IP66 Dust and water tight.

IP67 Dust and waterwave tight.

IK Protected against impact energy

PROTECTION RATING AGAINST MECHANICAL IMPACT		
classification according to standard: **EN 50102 o NF C 20-015**		
Impact force	NF C 20-010	Third figure in our catalogue
IK	**J**	**IP**
00	0	0
01	0,15	-
02	0,20	1
03	0,35	-
04	0,50	3
05	0,70	-
06	1	-
07	2	5
08	5	-
-	6	7
09	10	-
10	20	9

V.. V0: the test piece extinguishes within 5 sec. without dropping
V2: the test piece extinguishes within 25 sec. (dropping allowed)

L90 B10 100.000h Life expectancy of the LED.

Class II fixture (double insulation). No grounding needed.

Fixtures with protection fuse.

A luminaire with a limited surface temperature rating is specifically designed to prevent the fixture from acting as a source of ignition for combustible dust, whether settled on surfaces or suspended in the air. *Typical applications include: carpentry workshops, sawmills, woodworking plants; mills and storage facilities for flour, cereals, sugar; feed, pellet and powdered food production plants; textile factories (wool, cotton); pharmaceutical and cosmetics industries (organic powders); workshops or warehouses with high concentrations of dry dust.*

The fixture must not, under any circumstances, be covered with insulating material.

Fixture surface area exposed to the wind.

Minimum and maximum operating temperature. Ask for specific product temperature to our technical offices.

ICE version ideal for environments that reach low temperatures.

HT version ideal for environments that reach high temperatures.

Size of hole for recessed installation

0° 180° Fixture equipped with 0-90° protractor scale for aiming. Security dowels or rack with screw.

Ceiling light fixture fitted with LED and baffle film protection

DARK 65°< 500 LIGHT Radial dark light optic unit 65° manufactured according to European EN 12464 Regulations. Suitable for uses in places fitted with video terminals

The lighting fittings can be trodden on and also bear vehicle loads

Produced with vandal resistant materials.

Material supplied with vandal resistant system.

Aiming on horizontal axis at 0°.

Aiming on vertical axis at 0°.

Info - pictographs

The fixture can be mast-top installed. Tilt angle as indicated.

The fixture can be mast-arm installed. Tilt angle as indicated.

Mast top connection diameter.

These products are compliant with all applicable tests (third-party certification) pursuant to standard **ANSI C136.31: Street Lighting – Luminaire Vibration**.
- Test level: 3.0G Level 2 for bridge/overpass applications.

Products compliant with ball impact resistance test standard DIN 18032-3: 2018.

UV-stabilised coating, anti-yellowing. Fixture built with stabilised materials.

Protective coating recommended for marine environments within 5 km of the sea.

On request: ideal version for spaces with a high concentration of particular volatile chemicals around the luminaires (see chemical compatibility table).

Built with materials that are highly resistant to acid and toxic gas corrosion.

Electronic safety device to protect the LED module and the related ballast compliant with EN 61547.
It works in two modes:
- differential mode: surge between power cables and between the phase and neutral.
- common mode: surge between power, L/N and ground cables or between the fixture's body if it is of class II and installed on a metal pole.

Product with a very low flicker; uniform light for greater eye protection.

Risk Group 0 (RG0): luminaires are exempt from photobiological risks in compliance with standard EN 62471.

Risk Group 0 (RG0 Ethr): luminaires are exempt from photobiological risks in compliance with standard EN 62471. If necessary, contact our customer service for the observation distance.

Risk Group 1 (low risk group): luminaires do not pose any risks due to normal behavioural limitations of a person when exposed to a light source.

Indicative light efficiency of the fixture (note: for exact values, please visit the website for calculations or further reference).

Very demanding applications (technical drawings)

The exact value of this index differs by project type because it depends on the position of the luminaires, room characteristics (dimensions, reflections) and on the point of observation of viewers.

Offices and schools (reading, business meetings, computer work)

Industrial applications, craftsmen

Transit areas

1750K (subcode -44): lamps with warm light at a colour temperature of 1750K are ideal for particularly dangerous areas (pedestrian crossings, entries, roundabouts, etc.) and to minimize the lighting's impact on the environment and on the fauna of green urban areas.

2200K (subcode -73): lamps with warm amber light at a colour temperature of 2200K eliminate the risks of an excessive exposure to harmful blue LED light and allows a "softer" impact on inhabited zones, especially in historic centres.

3000K (subcode -39) - 4000K as standard: lamps with 3000K-4000K white light, instead, is the best choice for lighting up urban areas, streets, residential centres and generally all areas where this type of light guarantees greater safety and visual comfort.

Narrow beam.

Medium beam.

Wide beam.

Extra-wide beam.

Asymmetric beam.

Both direct and indirect light.

Rotosymmetric/wide beam.

Asymmetric beam.

Residential amenities/asymmetric beam.

Bi-asymmetric beam.

Residential amenities/large areas beam.

Centre road beam.

Residential amenities/ cycleways beam.

Cycleways beam.

Cycle-pedestrian beam.

Pedestrian crossing beam.

Fixtures are equipped with a device to reduce flux in 4 steps based on the calculation of the VIRTUAL MIDNIGHT.

PROG (CLD PROG): luminaires developed to grant great flexibility of use thanks to the possibility to vary luminous flux intensity by changing the LED drive current.

Fixture ideal for HD TV broadcasts.

Fixture available in the ATEX version.

Fixture available in the HORTICULTURE version.

Fixture available in the Tunable White and HCL version (see chapter *Interiors - HCL*).

Installation of photocell switch device as an optional feature.

Possibility of centralized lighting point control or via external presence/lighting sensors (see chapter Lighting management systems and recommendations).

Built-in RADAR SENSOR (sub-code -19 at an extra price): is an automatic sensor that immediately sense the presence of people's movements and anyone walking past.

Possibility of lighting point management with Casambi technology, an advanced automation lighting control system based on the bluetooth low energy (BLE).

Fixture available in the RGBW - DMX/RDM version (see chapter Lighting management systems - DMX solution for LED RGBW).

Fixture available in the RGB FULLCOLOR (see chapter Lighting management systems - DMX solution for LED RGBW).

WATERPROOF FIXTURES Fixture enclosures are in polycarbonate and keep their IP65/66 waterproof rating if installed, used and maintained in compliance with technical specifications (particularly operating voltage and temperature), as well as with the supplied instructions and applicable standards. Exposure to direct sunlight may heat up the fixture to 45°C compromising the degree of protection. It is advisable to use fixtures properly without altering mechanical properties and protection rating (IP65/IP66); **do not install on surfaces subject to strong vibrations, outdoors on hanging cables, or on walls under metallic grates, or on poles, and in any case, never expose the fixture to direct sunlight**. Otherwise, use watertight fixtures in steel.

Check the compatibility between the material constituting the product and the space where it will be installed

HEALTHCARE ENVIRONMENTS: nursing rooms, operating rooms, clinics, first aids, wards, aseptic rooms UNI EN 12464.

SCHOOLS: classrooms, lecture rooms, laboratories, meeting rooms. UNI EN 12464.

OFFICES: single office, meeting rooms, telephone exchange rooms, offices with VDU terminals. UNI EN 12464.

OFFICES WITH VDU TERMINALS: drafting and designing rooms, meeting rooms, banks, offices with VDU terminals. UNI EN 12464.

OFFICES WITH VDU TERMINALS: time spent in front of the screen continually - UNI EN 12464.

OPEN SPACES: offices, large areas, public areas, waiting rooms. UNI EN 12464.

ART AND CULTURE: cinemas, theatres, museums, galleries, churches, libraries, auditoriums, monuments UNI EN 12464

COMMON AREAS: corridors, stairs, llifts. UNI EN 12464.

COMMERCIAL CENTRES: shops, show rooms, shop windows, supermarkets, airports. UNI EN 12464.

LARGE-SCALE DISTRIBUTION: shopping centres, supermarkets, hypermarkets.

MALLS: General shops, goods displays, shop windows, supermarkets, airports, shop facades. UNI EN 12464.

GENERAL ROOMS: home, hotels, sleeping rooms, bars, restaurants, canteens. UNI EN 12464

FOOD INDUSTRY: UNI EN 12464.

WORKSHOPS: mechanical workshops, bodyshops, garages - UNI EN 12464.

STORES: Goods sheds, warehouses, depots, production areas, hangars. UNI EN 12464.

INDUSTRIES: stores, goods sheds, warehouses, depots, production areas. UNI EN 12464.

INDOOR SPORTS FACILITIES: ice-skating facilities, sport facilities, athletics grounds, swimming pools, gymnasiums, volleyball courts, basketball courts.

OUTDOOR SPORT FACILITIES: Football grounds, athletics grounds, horse racing grounds, golf courses, bowling fields, tennis, volleyball courts, basketball courts, etc. - UNI 9316.

PROFESSIONAL SPORT FACILITIES: Football grounds, athletics grounds, horse racing grounds, golf courses, bowling fields, tennis, volleyball courts, basketball courts, etc. UNI 9316.

SWIMMING POOLS

AMENITY LIGHTING: gardens, tree-lined alleys, green areas, parks, promenades.

RESIDENTIAL AREAS: private areas, residences; external walls, pedestrian paths, service stations - UNI 10439

CLASSIC LIGHTING: Ideal for application in city centers.

RELIGIOUS PLACES

FACADES

BICYCLE PATHWAYS: also for pedestrian areas.

PEDESTRIAN ROUTES: near crossroads, pedestrian crossings, and traffic light intersections.

STREETS: Secondary roads, shop-lined streets, low-traffic streets, industrial areas. UNI 10819 - UNI 10439.

PARKING LOTS: private, public, in commercial areas

PEDESTRIAN AREAS: parks, walkways

PORTS: large areas, common areas, loading and unloading areas

AIRPORTS: large areas, common areas, loading and unloading areas

TUNNELS: highway, railway, underground and subway, tunnels.

HOTEL

SPORT HALLS, GYMNASIUMS

BOATS, YACHT and BOAT BUSINESS

PHONE

NO SMOKING

WC

UV lighting for sanitization:

The presence of people is allowed.

Versions also including general lighting.

The presence of people is not allowed.

Versions with UV lighting only.

1- This catalogue supersedes and cancels all previous editions.

2- All list prices are VAT excluded and already include WEEE contribution. However, prices are not binding and the company will inform you on any variation.

3- Goods travel at the customer's risk, including in the case of possible breakages, even if shipped carriage free. No complaints will be accepted after 8 days from receipt.

4- Orders will be dealt with according to availability; partial shipments may also be sent out.

5- The characteristics of the articles, the LEDs used and the lighting design calculations may be subject to change without notice and with no obligation of notification, in accordance with our manufacturing requirements and in order to finalise the lighting fixture.

6- Transportation costs, with the exception of delivery by our vehicles, are at the customer's expense.

7- Returned goods will not be accepted. In any case, returned goods must be authorised by our company and will be accepted carriage free if the material is in a good state of conservation and can therefore be used. (Ask for the current year's circular).

8- We recommend that plastic components, especially those designed for suspension luminaires, be checked at least every time the bulb is changed.

9- Only payments made directly to our address or to persons authorised by our company, will be accepted**.**

10- Reproduction, even in part, of the descriptions and illustrations in our catalogue is prohibited.

11- The place of jurisdiction for any legal disputes arising from or related to these General Sales Conditions shall be Milan.

12- Disano guarantees that the products it manufactures are free of defects, in accordance with art. 1490 and subsequent articles of the Italian Civil Code.

QUANTITIES SHALL BE HANDLED ONLY IN PACKAGES OR RELEVANT MULTIPLES

SURCHARGE OF 10% FOR ACCESSORIES NOT HANDLED IN PACKAGES

DIMENSIONS ARE GIVEN IN MM, UNLESS OTHERWISE INDICATED

PHOTOMETRIC DATA, POWER EFFICIENCY AND LUMINAIRE DESIGN INFORMATION MAY BE SUBJECT TO VARIATIONS AND IMPROVEMENTS. BASED ON THE SPEED OF TECHNOLOGICAL EVOLUTION AFFECTING THESE PRODUCTS. THE COLOUR TEMPERATURES OF LEDS FALL WITHIN ACCEPTED INDUSTRY TOLERANCES DEFINED BY LED MANUFACTURERS, WE WILL GIVE NOTICE OF THESE CHANGES ON OUR WEBSITES FROM TIME TO TIME.

OUTPUT LUMINOUS FLUX AND POWER (tq): THE REPORTED LUMINOUS FLUX IS THE FLUX EMITTED BY THE LIGHT SOURCE WITH A TOLERANCE OF ± 10% COMPARED TO THE INDICATED VALUE. THE W TOT COLUMN (EXCEPT FOR THE EMERGENCY VERSIONS, OF WHICH VALUES ARE TO BE PROVIDED UPON REQUEST) INDICATES THE TOTAL WATTAGE ABSORBED BY THE SYSTEM WITHOUT EXCEEDING 10% OF THE INDICATED VALUE.

NOMINAL LUMINOUS FLUX AND POWER (tj-tp): LUMINOUS FLUX AND POWER VALUES ARE NOMINAL. THE FLUX MAY HAVE A TOLERANCE OF ± 10% WITH REFERENCE TO THE INDICATED VALUE. THE W COLUMN INDICATES THE LED'S POWER WATTAGE.

ALWAYS STAY WITHIN THE RECOMMENDED OPERATING TEMPERATURES OF THE DEVICE.

EXPOSURE TO CHEMICALS EITHER DIRECTLY OR IN THE ATMOSPHERE MAY DAMAGE THE LEDS AS WELL AS THE LIGHTING FIXTURES. FOR FURTHER INFORMATION, PLEASE CONTACT THE MANUFACTURER AND READ THE CHEMICAL COMPATIBILITY TABLE.

SOME IMAGES ARE SIMULATED APPLICATION AND / OR PHOTOMONTAGES

DISANO ILLUMINAZIONE s.p.a.
v.le Lombardia, 129 - 20089 Rozzano - MI (Italy)
Tel. +39 02 824771 - Email: info@disano.it
customer service: customerservice@disano.it
web: www.disano.it

FOSNOVA s.r.l.
via Como, 9 - 20089 Rozzano - MI (Italy)
Tel. +39 02 824771 - Email: info@fosnova.it
customer service: customerservice@disano.it
web: www.fosnova.it

ILUMINACIÓN DISANO S.A.
Poligono Industrial L'Avenar,
C/ de la Llum, n°2
43883 Roda de Barà, Tarragona
Tel. +34 977 55 88 90
www.disano.es

DISANO ILLUMINAZIONE CZECH REPUBLIC AND SLOVAKIA
Martin Bukovsky
Head of Representative Office
Mob. +420 602 515 329
Email: martin.bukovsky@disanogroup.cz

DISANO ILLUMINAZIONE FRANCE S.A.
Parc d'activité de la Caille,
1443 Route de l'Arny
74350 Allonzier la Caille
Tel. +33 4 50 33 08 10
Email: commercial@disano.fr
www.disano.fr

DISANO ILLUMINAZIONE ADRIA
(SLOVENIA, CROAZIA, SERBIA, MONTENEGRO, BOSNIA, KOSOVO)
Uros Kovac
Head of Representative Office
Mob. + 386 4 152 44 18
Email: uros.kovac@disano.si

DISANO ILLUMINAZIONE PORTUGAL
Agência FITLUZ, LDA - Julio Guedes
Mob. +351 919 318 510
Email: julio.guedes@disano.pt

DISANO ILLUMINAZIONE RUSSIA
Marina Vasilyeva
Head of Representative Office
Mob. +7 985 179 61 48
Email: marina.vasilyeva@disanogroup.ru

DISANO ILLUMINAZIONE IRELAND
Paul Hand
Head of Representative Office
Mob. +353 86 4660711
Email: paul.hand@disano.ie

DISANO ILLUMINAZIONE MIDDLE EAST
Office n.1001,10Th Floor
Dusseldorf Business Point,
Al Barsha 1 – DUBAI
Tel. +971 4 4329504
Email: info.dubai@disano.ae

DISANO ILLUMINAZIONE POLSKA
Paolo Nicoletti
Head of Representative Office
Mob. +48 506 822 198
Email: p.nicoletti@disano.pl

DISANO ILLUMINAZIONE AFRICA
Mohamed Benchekroun
Head of the Liaison Office Africa
Mob. +212.661 31 35 32
Email: mohamed.benchekroun@disano.ma

DISANO ILLUMINAZIONE HUNGARY
Kamill Kedei
Head of Representative Office
Mob. +36 30 708 4431
Email: kamill.kedei@disano.hu

DISANO ILLUMINAZIONE LATAM
Raul Rivera
Representative office latin america
Mob. +34 628 620 722
Email: raul.rivera@disano.es

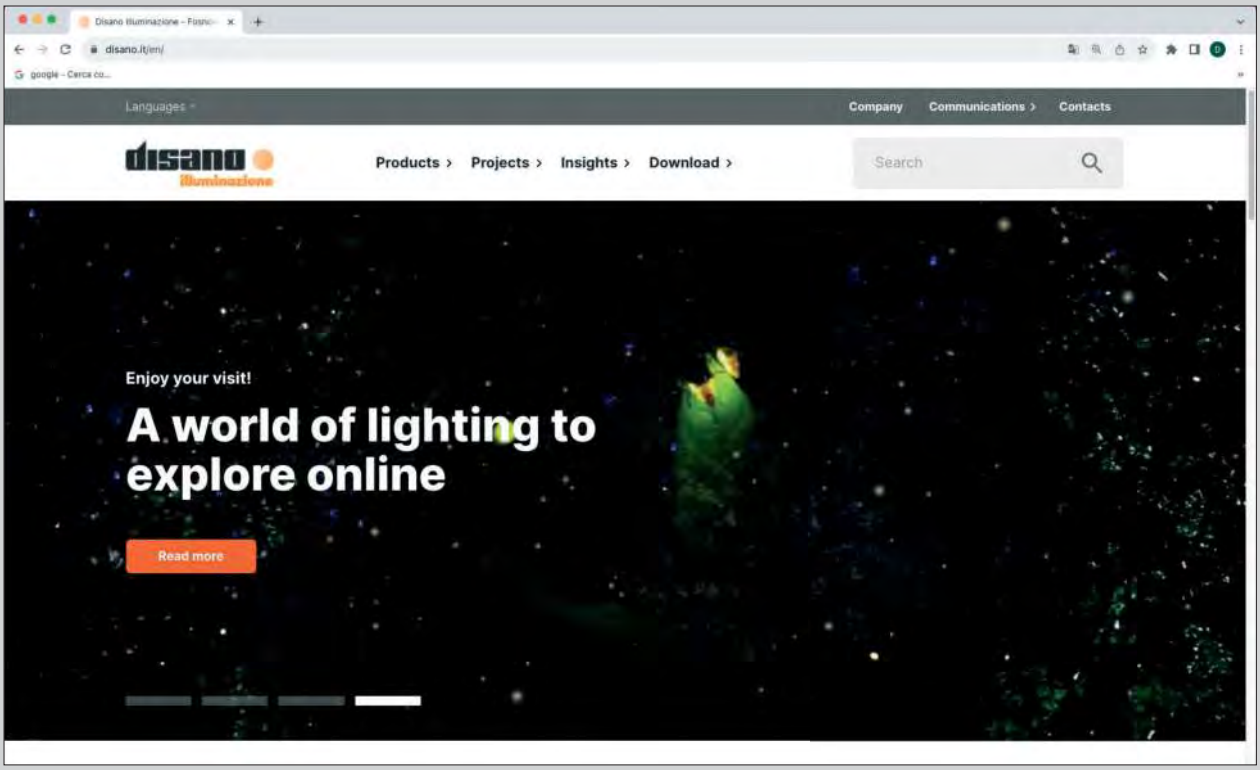
Languages
Company
Communications
Contacts
Products
Projects
Insights
Download
Search
Enjoy your visit!
A world of lighting to explore online
Read more

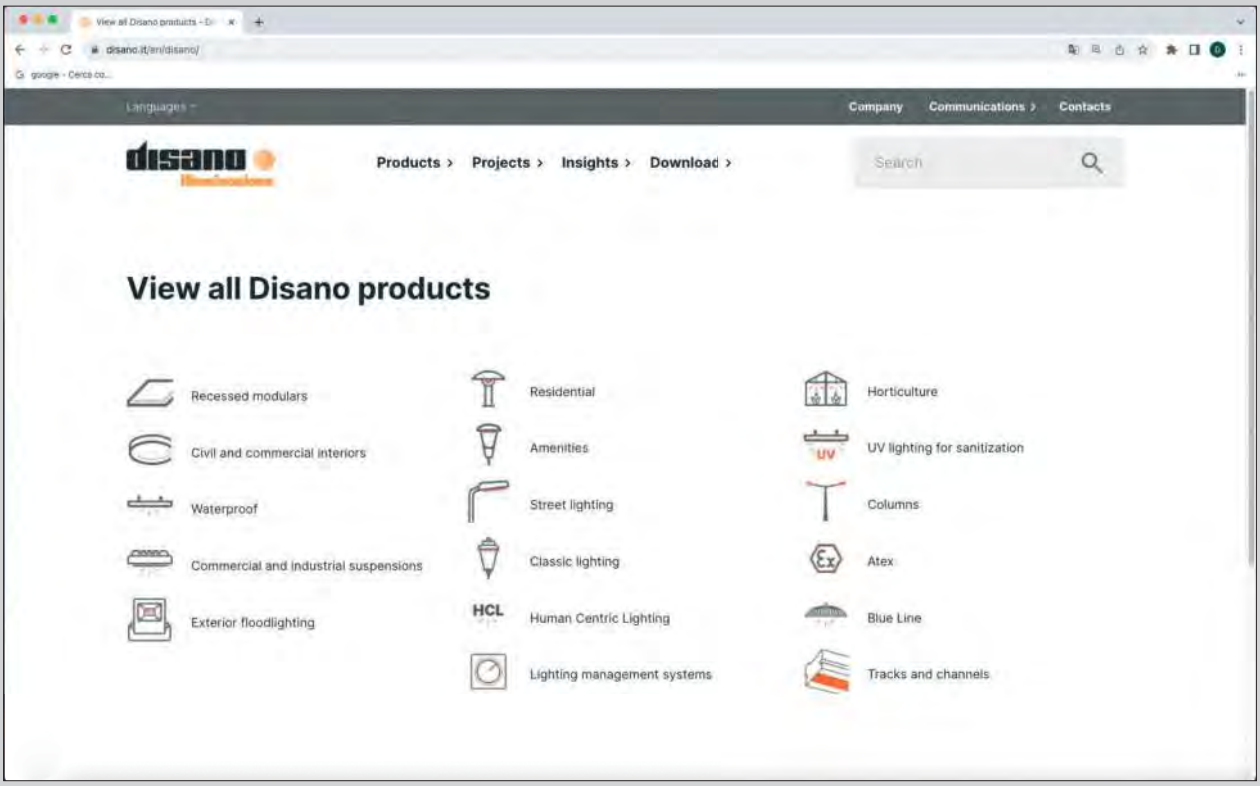
Languages
Company
Communications
Contacts
Products
Projects
Insights
Download
Search
View all Disano products
Recessed modulars
Civil and commercial interiors
Waterproof
Commercial and industrial suspensions
Exterior floodlighting
Residential
Amenities
Street lighting
Classic lighting
HCL
Human Centric Lighting
Lighting management systems
Horticulture
UV
UV lighting for sanitization
Columns
Atex
Blue Line
Tracks and channels